SERVICE MANUAL

MODEL	DEST.	CHASSIS NO.	MODEL	DEST.
VPH-G90U	US/CND	SCC-K81D-A	RM-PJ1001	World
VPH-G90E	AEP	SCC-K82E-A	PSS-90	World
VPH-G90M	E	SCC-N96A-A	IFB-G90E	AEP

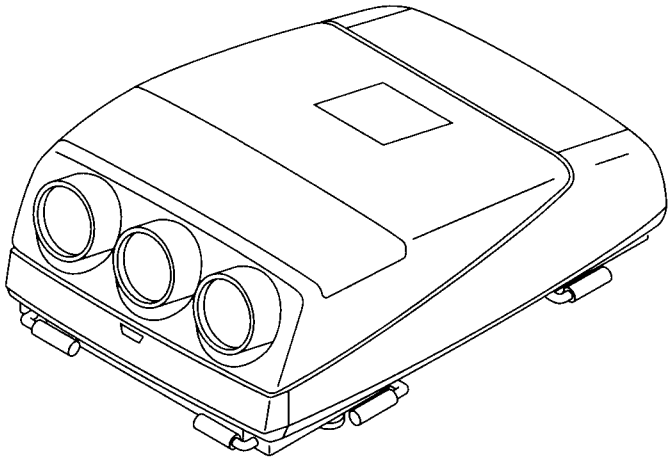

MULTISCAN PROJECTOR

SONY

⚠ WARNING

This manual is intended for qualified service personnel only.

To reduce the risk of electric shock, fire or injury, do not perform any servicing other than that contained in the operating instructions unless you are qualified to do so. Refer all servicing to qualified service personnel.

WARNING!!

AN ISOLATION TRANSFORMER SHOULD BE USED DURING ANY SERVICE TO AVOID POSSIBLE SHOCK HAZARD, BECAUSE OF LIVE CHASSIS.

THE CHASSIS OF THIS RECEIVER IS DIRECTLY CONNECTED TO THE AC POWER LINE.

SAFETY-RELATED COMPONENT WARNING!!

COMPONENTS IDENTIFIED BY MARK ⚠ ON THE SCHEMATIC DIAGRAMS, EXPLODED VIEWS AND IN THE PARTS LIST ARE CRITICAL TO SAFE OPERATION. REPLACE THESE COMPONENTS WITH SONY PARTS WHOSE PART NUMBERS APPEAR AS SHOWN IN THIS MANUAL OR IN SUPPLEMENTS PUBLISHED BY SONY. CIRCUIT ADJUSTMENTS THAT ARE CRITICAL TO SAFE OPERATION ARE IDENTIFIED IN THIS MANUAL. FOLLOW THESE PROCEDURES WHENEVER CRITICAL COMPONENTS ARE REPLACED OR IMPROPER OPERATION IS SUSPECTED.

ATTENTION!!

AFIN D'EVITER TOUT RISQUE D'ELECTROCUTION PROVENANT D'UN CHÁSSIS SOUS TENSION, UN TRANSFORMATEUR D'ISOLEMENT DOIT ETRE UTILISÉ LORS DE TOUT DÉPANNAGE. LE CHÁSSIS DE CE RÉCEPTEUR EST DIRECTEMENT RACCORDÉ À L'ALIMENTATION SECTEUR.

ATTENTION AUX COMPOSANTS RELATIFS À LA SÉCURITÉ!!

LES COMPOSANTS IDENTIFIÈS PAR UNE TRAME ET PAR UNE MARPUE ⚠ SUR LES SCHÉMAS DE PRINCIPE, LES VUES EXPLOSÉES ET LES LISTES DE PIECES CONT D'UNE IMPORTANCE CRITIQUE PUR LA SÉCURITÉ DU FONCTIONNEMENT. NE LES REMPLACER QUE PAR DES COMPOSANTS SONY DONT LE NUMÉRO DE PIÉCE EST INDIQUÉ DANS LE PRÉSENT MANUEL OU DANS DES SUPPLÉMENTS PUBLIÉS PAR SONY. LES RÉGLAGES DE CIRCUIT DONT L'IMPORTANCE EST CRITIQUE POUR LA SÉCURITÉ DU FONCTIONNEMENT SONT IDENTIFIES DANS LE PRÉSENT MANUEL. SUIVRE CES PROCÉDURES LORS DE CHAQUE REMPLACEMENT DE COMPOSANTS CRITIQUES, OU LORSQU'UN MAUVAIS FONCTIONNEMENT EST SUSPECTÉ.

TABLE OF CONTENTS

1. OPERATING INSTRUCTIONS

Operation Instruction 1-1
Installation Manual for Dealers 1-33

2. SERVICE INFORMATION

2-1. CIRCUIT BOARDS LOCATION 2-1
2-1-1. Location 1 2-1
2-1-2. Location 2 2-1
2-1-3. Location 3 2-2
2-2. DISASSEMBLY 2-3
2-2-1. Hood Removal 2-3
2-2-2. Cover Removal 2-4
2-2-3. Opening ED Block 2-5
2-2-4. DC Board Removal 2-5
2-2-5. EC Board Removal 2-6
2-2-6. ED Board Removal 2-7
2-2-7. E Board Removal 2-7
2-2-8. Remote Commander Removal 2-8
2-2-9. CB, CG and CR Blocks Removal 2-9
2-2-10. DA, DB, DD, DE and DF Boards Removal 2-10
2-2-11. EBH and EBQ Boards Removal 2-10
2-2-12. HVB Block and High-voltage Cable Removal 2-11
2-2-13. DC Fan Removal 2-12
2-2-14. PA and PD Boards Removal 2-12
2-2-15. MD Board Removal 2-13
2-2-16. HVF Block Removal 2-14
2-2-17. BA and YA Boards Removal 2-15
2-2-18. BC, F and ME Boards Removal 2-16
2-2-19. EBB, EBG, EBR and PE Boards Removal 2-17
2-2-20. GA and GB Boards Removal 2-18
2-2-21. Lens Removal 2-18
2-2-22. (1) Picture Tube Removal 2-19
2-2-22. (2) Picture Tube Installation 2-20
2-2-23. MA, MB and MC Boards Removal 2-21
2-2-24. M Board Removel 2-23
2-2-25. Extension Board 2-24
2-3. ERROR CODE 2-25
2-3-1. Warning Code on 7-Segment LED 2-25
2-3-2. Protector Code on 7-Segment LED 2-26
2-3-3. Error Code on 7-Segment LED 2-27
2-4. MEMORY ACCESS SYSTEM 2-28
2-4-1. Memory Structure 2-28
2-4-2. Various Memory Data 2-29
2-5. MEMORY DATA RESET 2-50

3. SET-UP ADJUSTMENTS

3-1. PRECAUTIONS UPON ADJUSTMENT 3-1
3-2. ATTACHING THE NECK ASSEMBLY 3-1
3-3. ADJUSTING CONDITIONS 3-1
3-3-1. Projecting System 3-1
3-3-2. CRT Convergence Angle Check 3-2
3-4. FOCUS ADJUSTMENT 3-3
3-4-1. Preparations 3-3
3-4-2. Focus Rough Adjustment 3-3
3-4-3. DY Angle Adjustment 3-4
3-4-4. MG FOCUS Coil Angle Adjustment 3-5
3-4-5. 64 kHz Signal Registration Rough Adjustment 3-6
3-4-6. RED/GREEN/BLUE Focus Adjustment 3-7
3-4-7. Zenith Angle Adjustment 3-8
3-4-8. HWC (H Width Coil) Adjustment 3-9
3-4-9. Video Size Adjustment 3-9
3-4-10. MG FOCUS Adjustment for 31.5 kHz Signal 3-10
3-4-11. VIDEO Block MG FOCUS Adjustment 3-11
3-4-12. MG FOCUS Adjustment for 64 kHz and 106 kHzSignals 3-11
3-4-13. Adjustment of Other Frequencies 3-11
3-5. REGISTRATION ADJUSTMENT 3-12
3-5-1. INPUT MEMORY No. 0 Adjustment 3-12
3-5-2. INPUT MEMORY No. 3 Adjustment 3-13
3-5-3. INPUT MEMORY No. 5 Adjustment 3-13
3-5-4. INPUT MEMORY No. 8 Adjustment 3-14
3-5-5. Horizontal/Vertical Reverse Mode Centering Adjustment 3-14
3-6. WHITE BALANCE ADJUSTMENT 3-15
3-6-1. Preparations 3-15
3-6-2. Color Temperature Adjustment with a Test Signal Generator 3-16
3-6-3. Color Temperature Adjustment with No Test Signal Generator 3-18
3-7. SIZE/SHIFT BLKG ADJUSTMENT 3-18
3-7-1. SIZE/SHIFT/BLKG of Video/HDTV Adjustment 3-18
3-7-2. Video Memory SIZE/SHIFT/BLKG Adjustments 3-19
3-8. HIGH VOLTAGE SCREEN DISTORTION ADJUSTMENT 3-19
3-9. PROCEDURE AFTER COMPLETING ADJUSTMENTS 3-19

4. SAFETY RELATED ADJUSTMENT

4-1. PA BOARD HV REGULATOR/HV PROTECTOR ADJUSTMENT 4-1
4-2. CRT PROTECTOR ADJUSTMENT 4-2

5. CIRCUIT ADJUSTMENTS

5-1. POWER BLOCK 5-1
5-1-1. DC (+) Adjustment 5-1
5-1-2. +115 V Adjustment 5-1
5-1-3. +200 V Adjustment 5-1
5-1-4. Oscillating Frequency Adjustment 5-1
5-2. BA BOARD ADJUSTMENT 5-2
5-2-1. Picture Control Adjustment 5-2
5-2-2. Signal Level Adjustment 5-2
5-2-3. Analog Test Signal Amplitude Adjustment 5-3
5-2-4. ABL Adjustment 5-3
5-3. CAR/CAG/CAB BOARDS ADJUSTMENT 5-3
5-3-1. Preparation Before Adjustments 5-3
5-3-2. Pedestal Level Adjustment 5-3
5-3-3. CRT Protector Adjustment 5-3
5-3-4. Cathode Level Adjustment 5-4
5-3-5. G1 Level Adjustment 5-4
5-3-6. VPS Limiter Adjustment 5-5
5-4. DA/DB/DD BOARDS ADJUSTMENTS 5-5
5-4-1. F/V Voltage Adjustment (DA Board) 5-5
5-4-2. AFC Adjustment (DA Board) 5-5
5-4-3. V Hold Adjustment (DA Board) 5-5
5-4-4. H Parabola Waveform Adjustment (DA Board) 5-6
5-4-5. H SIN Adjustment (DA Board) 5-6
5-4-6. H SIN × VP Waveform Adjustment (DB Board) 5-6
5-4-7. H SIN × V SIN Waveform Adjustment (DB Board) 5-7
5-4-8. HS × VS Waveform Adjustment (DB Board) 5-7
5-4-9. HP × V SIN Waveform Adjustment (DB Board) 5-7
5-4-10. 1/2 SIN1 Waveform Adjustment (DB Board) 5-7
5-4-11. 1/2 SIN2 Waveform Adjustment (DB Board) 5-7
5-4-12. HS × VS Waveform Adjustment (DB Board) 5-8
5-4-13. HP × VS Waveform Adjustment (DB Board) 5-8
5-4-14. B KEY Waveform Adjustment (DB Board) 5-8
5-4-15. T KEY Waveform Adjustment (DB Board) 5-8
5-4-16. 1/2H Switching Waveform Adjustment (DA/DB Boards) 5-8
5-4-17. D/A Converter Offset Adjustment (DD Board) 5-8
5-5. VCO OFFSET/LIMITER ADJUSTMENT 5-9
5-6. YA BOARD REPLACEMENT 5-9
5-6-1. Replacement Procedure 5-9
5-6-2. Uploading Program (Emergency Mode) 5-10
5-6-3. Creating Factory Data 5-10
5-6-4. Creating Service Data 5-11

6. SEMICONDUCTORS

7. EXPLODED VIEWS

7-1. HOOD AND COVER BLOCK 7-2
7-2. ED BLOCK 7-4
7-3. HVF BLOCK 7-6
7-4. CHASSIS BLOCK 1 7-7
7-5. REAR BLOCK 7-8
7-6. PICTURE TUBE BLOCK 7-10
7-7. CHASSIS BLOCK 2 7-12
7-8. BASE BLOCK 7-18

8. ELECTRICAL PARTS LIST

Note:
IFB-G90E corresponds to the BD BOARD.

9. BLOCK DIAGRAMS

BA (1/3) 9-2
BA (2/3) 9-3
BD (Except VPH-G90E) 9-3
BA (3/3) 9-4
BB 9-5
BC 9-6
YA (1/4) 9-7
YA (2/4) 9-8
YA (3/4) 9-9
YB 9-9
YA (4/4) 9-10
DA 9-11
DB 9-12
DC 9-13
NA 9-13
DD (1/2) 9-14
DD (2/2) 9-15
DE (1/2) 9-16
DE (2/2) 9-17
DF 9-18
F 9-19
GA 9-19
GAA 9-19
GB 9-19
GBA 9-19
GBB 9-19
GC 9-19

L 9-19
ME 9-19
E 9-20
EA 9-20
ED 9-20
EBH 9-21
EBQ 9-21
EBR 9-22
EBG 9-22
EBB 9-22
PA 9-23
PB 9-23
MD 9-24
NB 9-24
PD 9-24
PE 9-25
CAR 9-26
CAG 9-26
CAB 9-26
CBR 9-26
CBG 9-26
CBB 9-26
CDR 9-26
CDG 9-26
CDB 9-26

10. DIAGRAMS

10-1. FRAME SCHEMATIC DIAGRAMS 10-2
10-2. SCHEMATIC DIAGRAMS/PRINTED WIRING BOARDS 10-13
SCHEMATIC DIAGRAMS
BD 10-13
BA 10-19
BB 10-40
BC 10-47
YA 10-52
YB 10-63
DA 10-67
DB 10-73
NA 10-78
DC 10-79
DD 10-83
DE 10-89
DF 10-95
L 10-99
E 10-103
ED 10-105
EA 10-107
PA 10-110

PB 10-113
PD 10-115
NB 10-115
PE 10-117
EBA 10-119
EBC 10-119
EBB 10-121
EBG 10-123
EBR 10-125
EBH 10-127
EBQ 10-129
CAB 10-132
CBB 10-135
CDB 10-137
CAG 10-140
CBG 10-143
CDG 10-145
CAR 10-148
CBR 10-151
CDR 10-153
F 10-155
GA 10-158
GAA 10-159
GB 10-162
GBA 10-165
GBB 10-167
GC 10-169
M 10-172
MA 10-176
MB 10-178
MC 10-179
MD 10-180
EC 10-181
ME 10-182
PRINTED WIRING BOARDS
BD 10-13
BA 10-14
BB 10-39
BC 10-46
YA 10-48
YB 10-63
DA 10-64
DB 10-70
DC 10-76
NA 10-78
DD 10-80
DE 10-86
DF 10-92
L 10-99
E 10-100

ED 10-104
EA 10-106
PA 10-108
PB 10-113
PD 10-114
NB 10-114
PE 10-116
EBA 10-118
EBC 10-118
EBB 10-120
EBG 10-122
EBR 10-124
EBH 10-126
EBQ 10-128
CAB 10-130
CBB 10-135
CDB 10-136
CAG 10-138
CBG 10-143
CDG 10-144
CAR 10-146
CBR 10-151
CDR 10-152
F 10-154
GA 10-156
GAA 10-159
GB 10-160
GBA 10-164
GBB 10-166
GC 10-168
M 10-170
MA 10-175
MB 10-178
MC 10-179
MD 10-180
EC 10-181
ME 10-182

SECTION 1
OPERATING INSTRUCTIONS

This section is extracted from operating instructions.

3-865-265-11 (2)

SONY

Multiscan Projector

Operating Instructions

VPH-G90E
VPH-G90M
VPH-G90U

© 1998 by Sony Corporation

WARNING

To prevent fire or shock hazard, do not expose the unit to rain or moisture.

To avoid electrical shock, do not open the cabinet. Refer servicing to qualified personnel only.

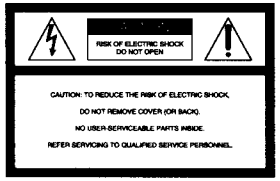

This symbol is intended to alert the user to the presence of uninsulated "dangerous voltage" within the product's enclosure that may be of sufficient magnitude to constitute a risk of electric shock to persons.

This symbol is intended to alert the user to the presence of important operating and maintenance (servicing) instructions in the literature accompanying the appliance.

For the customers in the USA
Note
This equipment has been tested and found to comply with the limits for a Class A digital device, pursuant to Part 15 of the FCC Rules. These limits are designed to provide reasonable protection against harmful interference when the equipment is operated in a commercial environment. This equipment generates, uses, and can radiate radio frequency energy and, if not installed and used in accordance with the instruction manual, may cause harmful interference to radio communications. Operation of this equipment in a residential area is likely to cause harmful interference in which case the user will be required to correct the interference at his own expense.

Warning
You are cautioned that any changes or modifications not expressly approved in this manual could void your authority to operate this equipment.

For the customers in Canada
This Class A digital apparatus complies with Canadian ICES-003.

For the customers in the United Kingdom

WARNING
THIS APPARATUS MUST BE EARTHED

IMPORTANT
This wires in this mains lead are coloured in accordance with the following code:

Green-and-Yellow:	Earth
Blue:	Neutral
Brown:	Live

As the colours of the wires in the mains lead of this apparatus may not correspond with the coloured markings identifying the terminals in your plug proceed as follows:
The wire which is coloured green-and-yellow must be connected to the terminal in the plug which is marked by the letter E or by the safety earth symbol Y or coloured green or green-and-yellow.
The wire which is coloured blue must be connected to the terminal which is marked with the letter N or coloured black.
The wire which is coloured brown must be connected to the terminal which is marked with the letter L or coloured red.

Voor de klanten in Nederland
- Dit apparaat bevat een Li-ion batterij voor memory back-up.
- De batterij voor memory back-up van het geheugen is bevestigd op IC333 van plaat YA.
- Raadpleeg uw leverancier over de verwijdering van de batterij op het moment dat u het apparaat bij einde levensduur afdankt.
- Gooi de batterij niet weg, maar lever hem in als KCA.
- Bij dit produkt zijn batterijen geleverd. Wanneer deze leeg zijn, moet u ze niet weggooien maar inleveren als KCA.

The socket-outlet should be installed near the equipment and be easily accessible.

AVERTISSEMENT

Afin d'éviter tout risque d'incendie et d'électrocution, ne pas exposer l'appareil à la pluie ou à l'humidité.

Pour éviter tout risque de décharge électrique, ne pas ouvrir le boîtier. Confiez l'entretien uniquement à un personnel qualifié.

Pour les utilisateurs au Canada
Cet appareil numérique de la classe A est conforme à la norme NMB-003 du Canada.

La prise doit être près de l'appareil et facile d'accès.

ACHTUNG

Um Feuergefahr und die Gefahr eines elektrischen Schlages zu vermeiden, darf das Gerät weder Regen noch Feuchtigkeit ausgesetzt werden.

Im Geräteinneren befinden sich Teile, die unter gefährlich hoher Spannung stehen. Das Gehäuse darf nicht geöffnet werden. Überlassen Sie die Wartung nur geschultem Fachpersonal.

Für Kunden in Deutschland
Dieses Produkt kann im kommerziellen und in begrenztem Maße auch im industriellen Bereich eingesetzt werden. Dies ist eine Einrichtung, welche die Funk-Entstörung nach Klasse B besitzt.

Die Steckdose muß nahe bei diesem Gerät angebracht und leicht zugänglich sein.

ADVERTENCIA

Para prevenir el riesgo de incendios o de electrocución, no exponga la unidad a la lluvia ni a la humedad.

Para evitar descargas eléctricas, no abra la unidad. En caso de avería, solicite el servicio de personal cualificado únicamente.

ATTENZIONE

Per evitare il pericolo di incendi o scosse elettriche, non esporre l'apparecchio alla pioggia o all'umidità e non aprirlo.

Per eventuali riparazioni, rivolgersi esclusivamente a personale qualificato.

STAATL. GEWERBEAUFSICHTSAMT STUTTGART

Zentrale Stelle für die Vollzugsunterstützung (ZSV)

Sony International (Europe) GmbH
Stuttgart Technology Center
Stuttgarter Straße 106

70736 Fellbach

Stuttgart, den 13.07.1998
Durchwahl: 1869-638
Aktenzeichen: ZSV 4677.21 Bm
Bearbeiter: Herr Böhm

Zulassungsschein Nr. BW/505/98/Rö

Gemäß § 10 der Röntgenverordnung vom 08.01.1987 (BGBl. I S. 114) wird die Zulassung der Bauart durch den Bauartzulassungsbescheid vom 13.07.1998 für den nachfolgend aufgeführten Störstrahler bescheinigt:

Gegenstand	: Multiscan Projector
Firmenbezeichnung	: Sony Typ VPH-G90.
Projektionsröhren	: Hersteller: Panasonic Type: P19LQF60RJA P19LQF65HKA P19LQF60BMB
Betriebsbedingungen	: Hochspannung max. 33,3 kV Strahlstrom 3,6 mA
Hersteller (Produktionsstätte)	: 1. Sony INY Quality Control Department Ichinomiya, Aiti-Prerecture, Japan 2. SDCP-DSM (Display System Manufacturing) Quality Assurance Department San Diego, California, USA
Befristung	: bis 13.07.2008

STAATL. GEWERBEAUFSICHTSAMT STUTTGART

Für den Strahlenschutz wesentliche Merkmale:

1. Die Art und Qualität der Projektionsröhren,
2. die der Hochspannungserzeugung und -stabilisierung dienenden Bauelemente.

Kronenstr. 39, 70174 Stuttgart Postfach 101743, 70015 Stuttgart Telefon 0711/1869-0 Telefax 0711/1869-630

Auflagen:

1. Die Multiscan Projectoren sind einer Stückprüfung daraufhin zu unterziehen, ob sie bezüglich der für den Strahlenschutz wesentlichen Merkmale der Bauartzulassung entsprechen.
   Die Prüfung muß umfassen:
   a) Kontrolle der Hochspannung an jedem einzelnen Gerät,
   b) Messung der Dosisleistung nach Festlegung im Bauartzulassungsbescheid.
2. Jedem Erwerber eines Multiscan Projectors ist ein Abdruck des Zulassungsscheins auszuhändigen, auf dem das Ergebnis der Stückprüfung (Maßgabe 1) bestätigt und die Herstellernummer angegeben sein muß.
3. Die Multiscan Projectoren sind deutlich sichtbar und dauerhaft mit dem Kennzeichen
   BW/505/98/Rö
   zu versehen, sowie mit einem Hinweis folgenden Mindestinhaltes:
   "Die in diesem Gerät entstehende Röntgenstrahlung ist ausreichend abgeschirmt.
   Beschleunigungsspannung maximal 33,3 kV".
4. Jedem Multiscan Projector ist eine Betriebsanleitung beizufügen, in der insbesondere auf die dem Strahlenschutz dienenden Maßnahmen hingewiesen wird.

Hinweis für den Benutzer des Gerätes:

Unsachgemäße Eingriffe, insbesondere verändern der Hochspannung oder Auswechseln der Bildröhren können dazu führen, daß Röntgenstrahlung in erheblicher Stärke auftritt. Ein so veränderter Multiscan Projector entspricht nicht mehr dieser Zulassung und darf infolgedessen nicht mehr betrieben werden.
Die vor Ablauf der Frist in Verkehr gebrachten Geräte dürfen nach Ablauf der Frist weiter betrieben werden.

Böhm

STAATL. GEWERBEAUFSICHTSAMT STUTTGART

Die geforderte Stückprüfung hat ergeben, daß die gemessene Ortsdosis-Leistung unter dem im Prüfungsschein Nr. 6.52-S 1259 der PTB genannten Wert von 0,2 µSv/h liegt.

Table of Contents

Overview

Precautions 8

Features 11

Location and Function of Controls 13
- Front 13
- Rear 15
- Remote Commander/Control Panel 17

Projecting

Projecting 21

Adjusting the Picture 24

Centering Adjustment 25

Adjusting the Size And Shift of the Picture 27
- SIZE adjustment 27
- SHIFT adjustment 27
- Blanking adjustment 28

Adjustments and settings using the menu

Using the Menu 29
- Basic Menu Operation 29
- Menu Modes 30

The PIC CTRL (Picture Control) Menu 32

The PIC SETTING 1 (Picture Setting 1) Menu 34

The PIC SETTING 2 (Picture Setting 2) Menu 35

The INPUT SETTING Menu 36

The SET SETTING 1 Menu 38

The SET SETTING 2 Menu 39

The INPUT INFO (Information) Menu 41

The SET INFO (Information) Menu 42

Installation/connection examples

Installation Examples 43
- Installation 1: Floor Installation Using Front Projection Flat Screen 44
- Installation 2: Ceiling Installation Using Front Projection Flat Screen 45

Connection Examples 46
- Connecting Directly to the Projector 46
- Connecting Multiple Projectors 47
- Using the PC-3000 Signal Interface Switcher 49
- Confirming the System Construction 50
- Using the PC-1271/1271M Signal Interface Switcher 51

Setting the Index Numbers 52

Maintenance / Other

Troubleshooting 55

Specifications 56

Index 59

Overview

Precautions

On safety

- Check that the operating voltage of your unit is identical with the voltage of your local power supply. If voltage adaptation is required, consult with qualified Sony personnel.
- Should any liquid or solid object fall into the cabinet, unplug the unit and have it checked by qualified personnel before operating it further.
- Unplug the unit from the wall outlet or set the MAIN POWER switch to OFF if it is not to be used for several days.
- To disconnect the cord, pull it out by the plug. Never pull the cord itself.
- The wall outlet should be near the unit and easily accessible.
- The unit is not disconnected from the AC power source (mains) as long as it is connected to the wall outlet, even if the unit itself has been turned off.

On installation

- When the projector is mounted on the ceiling, the Sony PSS-90 Projector Suspension Support must be used for installation. Read the installation manual of the PSS-90 carefully, since the ceiling should be reinforced for safety.
- Allow adequate air circulation to prevent internal heat build-up. Do not place the unit on surfaces (rugs, blankets, etc.) or near materials (curtains, draperies) that may block the ventilation holes. Leave space of more than 30 cm (12 inches) between the wall and the projector. Be aware that room heat rises to the ceiling; check that the temperature near the installation location is not excessive.
- Do not install the unit in a location near heat sources such as radiators or air ducts, or in a place subject to direct sunlight, excessive dust or humidity, mechanical vibration or shock.

- To avoid moisture condensation, do not install the unit in a location where the temperature may rise rapidly.
- Fans are installed inside the projector to prevent internal heat build-up. The fans produce a humming noise when the power is switched on, which is normal. Should the noise sound abnormal, please consult qualified Sony personnel.

On illumination

- To obtain the best picture, the front of the screen should not be exposed to direct lighting or sunlight.
- Ceiling-mounted spot lighting is recommended. Use a cover over fluorescent lamps to avoid lowering the contrast ratio.
- Cover any windows that face the screen with opaque draperies.
- It is desirable to install the projector in a room where floor and walls are not of light-reflecting material. If the floor and walls are of reflecting material, it is recommended that the carpet and wall paper be changed to a dark color.

On operation

To turn on the projector after the projector has been turned off due to a brief loss of power, press the ON key on the remote commander, or turn off the MAIN POWER switch so that the STANDBY indicator turns off and then turn on the MAIN POWER switch.

On cleaning

- To keep the cabinet looking new, periodically clean it with a soft cloth. Stubborn stains may be removed with a cloth lightly dampened with a mild detergent solution. Never use strong solvents, such as thinner, benzene, or abrasive cleansers, since these will damage the cabinet.
- Avoid touching the lens. To remove dust on the lens, use a soft dry cloth. Do not use a damp cloth, detergent solution, or thinner.

Precautions

CRT burns

When a static picture of a computer, etc. is displayed for more than about an hour, a CRT burn may result. This means that an after-image impression of the static picture remains on the screen even after the picture has changed. If it is necessary to display the same static picture for more than an hour, we recommend that you set the CONTR (contrast) control to the lowest setting.
Also, when a picture of different size is displayed beyond a certain length of time, an after-image impression of the frame of the smaller picture may be burnt on the screen (such as displaying a 16:9 wide size picture on a 4:3 screen). To avoid this, we recommend that you use the same picture size when possible. However, if it is necessary to use a different picture size, set the CONTR (contrast) control and the BRT (brightness) control of the smaller picture to the lowest setting possible. This will minimize the risk of creating an after-image impression.
If the CRT burns, it must be replaced. In this case, refer to the warranty provided with this unit. Consult your Sony dealer or Qualified Service Personnel.

On repacking

Save the original shipping carton and packing material; they will come in handy if you ever have to ship your unit. For maximum protection, repack your unit as it was originally packed at the factory.

Features

Multiscan projector [1)]

This projector accepts and automatically detects horizontal scanning frequencies between 15 kHz and 150 kHz and vertical scanning frequencies between 38 Hz and 150 Hz.
In addition to high-resolution pictures from computers, you can also project pictures from teletext decoders, VCRs and video cameras.

High resolution and brightness

A newly developed 9-inch electromagnetic focus CRT, a hybrid Sony HACC (High-resolution Aspherical and Color Corrected) lens and a wide-range cathode/G1 dual-drive video output circuit are incorporated in the projector to provide a sharp and bright high-quality picture with the high resolution of 2500 × 2000 pixels and the high light output of 350 lumen.

High contrast

The adoption of the optical coupling technologies, double-focus lens system and an anti-reflection coating gives a fine-detail and sharp picture with improved contrast in corners and screen center.

Easy operation—remote control, on-screen display

Adjustments such as input selection, picture control and centering adjustment can be remotely controlled from both the front and rear of the projector with the supplied remote commander. You can also use the commander as a wired remote control by connecting it to the projector with the supplied remote control cable.

Compatible with various color systems [1)]

NTSC, PAL, SECAM, $NTSC_{4.43}$ [2)] or PAL-M color system can be selected automatically or manually.

1) The VPH-G90E model is not equipped with the VIDEO connectors.
To connect video signals, the optional IFB-G90E Video Interface Board is required.
2) $NTSC_{4.43}$ is the color system used when playing back a video recorded on NTSC on a $NTSC_{4.43}$ system VCR.

Features

Flexible setup

You can project a 90- to 300-inch picture (120-inch standard) with this projector. The projector can be set up on the floor or ceiling, for front or rear projection to suit the installation location, surrounding illumination, usage, etc.

Illuminated control panel/remote commander keys

The key names on the remote commander and the control panel of the projector can be illuminated for easy access in a dark place by pressing the LIGHT button.

DRC (Digital Reality Creation) circuit[1)]

The DRC is Sony's unique double-scan technology which creates a 4-times density image from the NTSC signal. A normal NTSC signal (525 scanning lines) is converted into a high density signal (1050 scanning lines) using digital mapping tecnology. Compared with the conventional double-scan, the DRC creates a highly realistic moving picture without blurs.

1) The VPH-G90E model is not equipped with the VIDEO connectors.
To connect video signals, the optional IFB-G90E Video Interface Board is required.

Location and Function of Controls

Front

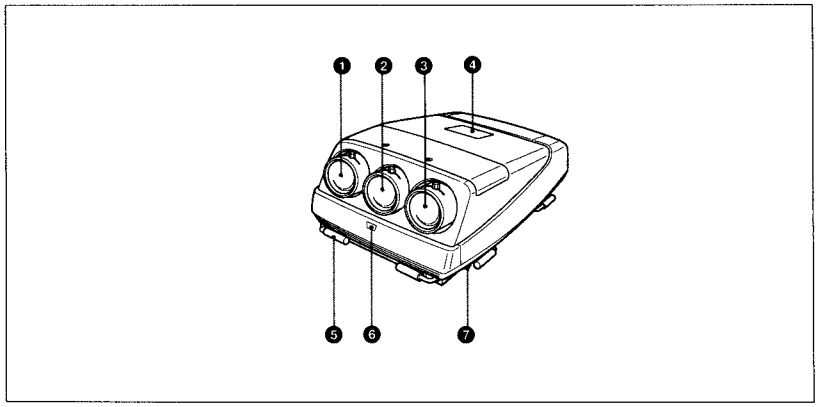

1 Blue lens

2 Green lens

3 Red lens

4 Control panel cover
The control keys are inside the cover.
The locations and functions of the control keys are the same as those of the remote commander.

For details, see "Remote Commander/Control Panel" on page 17.

5 Handles
Used for carrying the projector. The handles are located on the front, rear, left and right sides.

6 Front remote control detector

7 Adjusters
Used to keep the projector level if it is installed on an uneven surface (equipped with four adjusters).

How to use the adjusters

Using the supplied tool, turn the adjusters to adjust the height so that the projector becomes level.

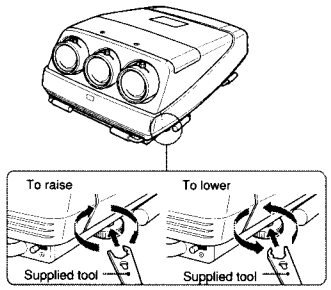

Notes

- The supplied tool can rotate the screw in one direction only. To rotate the screw in the reverse direction, turn the tool upside down.
- Do not turn the tool forcibly when the screw has fully rotated. Otherwise, the tool may slip out and injure your hand.

Location and Function of Controls

Using the handles

Carry the projector **with four persons or more** by using the front, rear and side (right and left) handles.
Pull out the front and rear handles or the side handles.

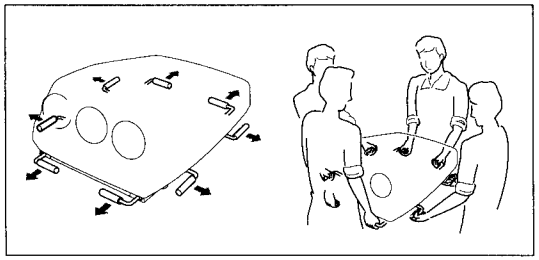

Putting away the handles

Push the handle release lever under each handle. The handle is automatically retracted.

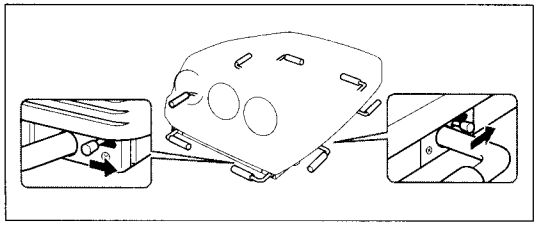

Rear

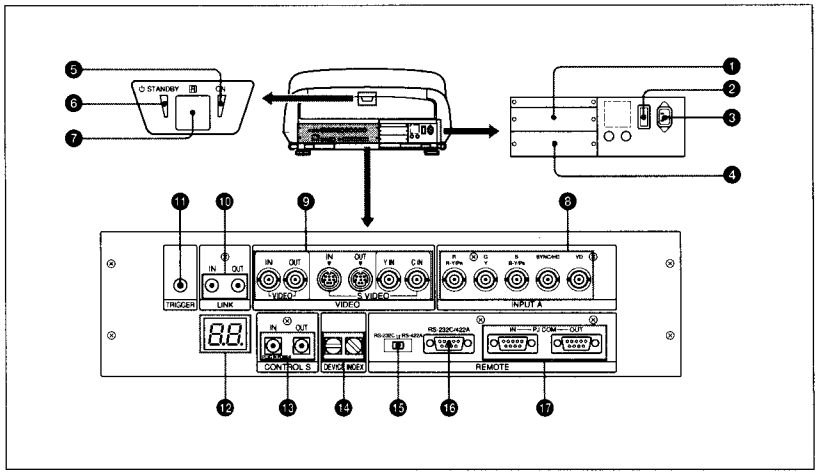

❶ Signal interface board attachment part (INPUT B)
An optional signal interface board such as IFB-12/12A and IFB-40 can be attached to this section.
When the IFB-12/12A is attached, the signal input to the INPUT A connectors can be output from the IFB-12/12A by setting it to output mode.

❷ MAIN POWER switch

❸ AC IN socket
Connect the supplied AC power cord.

❹ Signal interface board attachment part (INPUT C)
An optional signal interface board can be attached to this section.

Notes
- The IFB-40 cannot be attached to INPUT C.
- When the IFB-12/12A is attached, the IFB-12/12A cannot be set to output mode.

❺ ON indicator
When the projector is turned on, this indicator lights in green.

❻ ⏻ STANDBY indicator
When the MAIN POWER switch on the projector is turned ON, this indicator lights in orange, indicating that the projector can be turned on/off using the remote commander.

❼ Rear remote control detector

❽ INPUT A connectors (BNC type)
R/R-Y/PR, G/Y, B/B-Y/PB, SYNC/HD, VD connectors: Connect to the outputs of a computer or a video camera. According to the connected equipment, the RGB (R, G, B), component (R-Y, Y, B-Y) or HDTV (PR, Y, PB) signal is selected.

Location and Function of Controls

⑨ VIDEO connectors*

VIDEO IN connector (BNC type): Connects to the composite video output of the video equipment.

VIDEO OUT connector (BNC type): Connects to the composite video input of a color monitor.

S VIDEO IN/OUT connectors (4-pin, mini-DIN type): Connects to the S video output or input of the video equipment.

Y IN, C IN connectors (BNC type): Connects to the Y and C video outputs of the video equipment.

Note

The S VIDEO IN connector is disconnected when a cable is connected to the Y IN/C IN connectors.

*** Note on the VPH-G90E model**

The optional IFB-G90E Video Interface Board is required for using the VIDEO connectors.

⑩ LINK IN/OUT jacks (stereo minijack)

When connecting multiple projectors, connect the LINK OUT jack to the LINK IN jack on another projector. Then the ABL LINK function can be used.

⑪ TRIGGER connector (minijack)

When the projector is turned on, 12 V is output. When it is turned off, 0 V is output. However, the connector cannot be used as the power source.

⑫ LED display window

Self-diagnosis results and PJ COM communication conditions, etc. are displayed using two-digit numbers and alphabets.

Self-diagnosis codes are displayed in red or orange, and the warning and communication conditions in green.

⑬ CONTROL S jacks

IN/PLUG IN POWER jack (stereo minijack): Connects to the CONTROL S OUT jack of other Sony equipment. Also connects to the CONTROL S OUT jack of the supplied remote commander with the supplied remote control cable (stereo cable) to be used as a wired remote control. In this case, this jack supplies the power to the remote commander to save the battery power.

OUT jack (stereo minijack): Connects to the CONTROL S IN jack of other Sony equipment.

Note

When using this jack, the remote control detector on the projector does not function.

⑭ DEVICE INDEX switches

When multiple projectors are connected, set the device index number of each projector.

To display the device index number on the screen, press the NORMAL key, and the ENTER key on the remote commander.

> **Note**
>
> Do not set the device index number to "00." If you do, the projector will not operate with the remote commander.
>
> You can operate the projector with the keys on the control panel of the projector but the connected equipment cannot be operated with the keys on the control panel.

⑮ RS-232C/RS-422A selector

Selects the function of the RS-232C/RS-422A connector.

⑯ RS-232C/422A REMOTE connector (D-sub 9-pin)

Used to expand the system connections using the RS-232C/422A interface.

⑰ PJ COM (projector communication) IN/OUT connectors (D-sub 9-pin)

These are the connectors conforming to the RS-485 standards, especially designed to expand the system using Sony projectors.

Use these connectors to connect the PJ COM system of the PC-3000 Signal Interface Switcher.

When the cable is connected to the IN connector only, attach the supplied terminator to the OUT connector.

To connect multiple projectors, connect the IN connector to the OUT connector of another projector in cascade, and attach the supplied terminator to the OUT connector of the last projector.

For details on the specifications of the connector, refer to the Protocol Manual prepared by Sony.

Remote Commander/Control Panel

The locations and functions of the keys on the remote commander are the same as those on the control panel of the projector. (Only the remote commander is equipped with the transmission indicator and the COMMAND ON/OFF switch.)

The remote commander may be used as a wired or wireless remote control.

Notes

- The RGB APA/DOT PHASE ❹, VOL +/– ⑯, INPUT SELECT D ⑲, LCD LENS CONTROL ㉓ and AUDIO MUTING ㉕ keys do not function with this projector.
- The RGB SIZE/SHIFT ❹, CENT R/B ❻ and BLKG ㉑ keys function only in the pro-user mode.
- The keys on the control panel are basically effective for this projector only. Only the commands from the SYS SET key and the switcher select commands are transmitted to the connected equipment via the PJ COM connector.

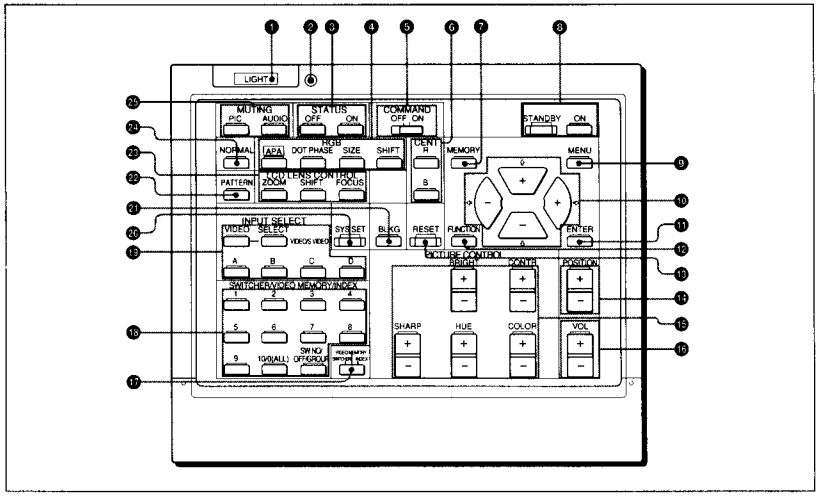

❶ LIGHT button

Illuminates the key indicators when the COMMAND switch ❺ is set to ON. If the COMMAND switch is set to OFF, only the COMMAND switch is illuminated.

The key indicators turn off if you press the LIGHT button again.

If you do not press any key for more than 30 seconds, the indicators also turn off automatically.

When the remote commander is connected to the CONTROL S IN/PLUG IN POWER jack of the projector via the remote control cable, the power is supplied to the remote commander from the projector.

❷ Transmission indicator (only for the remote commander)

Lights each time you press a key. If it does not light, replace the batteries with new ones.

❸ STATUS ON/OFF keys

Press OFF to eliminate the on-screen display.

Press ON to restore the on-screen display.

Note

The menus and warning messages appear even if the OFF key is pressed.

Location and Function of Controls

❹ RGB keys
Adjust the picture.
APA: This key does not function with this projector.
DOT PHASE: This key does not function with this projector.
SIZE: Enters the size adjustment mode for the input signal in the pro-user mode. Next adjust the size of the picture using the four arrow keys. Each time you press this key, the COARSE and FINE modes are switched alternately.
←: to reduce horizontal size
→: to expand horizontal size
↑: to expand vertical size
↓: to reduce vertical size
SHIFT: Enters the shift adjustment mode for the input signal in the pro-user mode. Next adjust the position of the picture using the four arrow keys. The picture shifts in the direction of the arrow on the pressed key. Each time you press this key, the COARSE and FINE modes are switched alternately.

❺ COMMAND ON/OFF switch (only for the remote commander)
No keys on the remote commander except the LIGHT button ❶ function when this switch is set to OFF. This saves battery power when a button is pressed inadvertently.

❻ CENT R/B keys
Enter the centering adjustment mode of the red and blue in the pro-user mode.
R: Press to enter the red centering adjustment mode.
B: Press to enter the blue centering adjustment mode.
Perform the centering adjustment using the four arrow keys.

❼ MEMORY key
Stores various adjusted data into memory.

❽ ON/SYANDBY keys
Turn on and off the projector when the MAIN POWER switch on the projector is set to ON.

❾ MENU key
Displays the main menu. Press it again to turn off the menu.

❿ Arrow keys
Adjust the value or select the item in the menu.

⓫ ENTER key
Stores the settings in the menu, or selects and displays the index number.

⓬ FUNCTION key
Press to use the extended functions.

⓭ RESET key
Resets the adjusted levels to the factory preset or service adjusted levels.

⓮ POSITION +/– keys
Select the position to be adjusted on the screen in focus, registration or blanking adjustment mode. Also, set V SHIFT to WIDE or NARROW in or HDTV RGB input signal's SHIFT adjustment mode.

⓯ PICTURE CONTROL keys
Adjust the picture conditions: CONTR (contrast), BRIGHT (brightness), COLOR, HUE and SHARP (sharpness).

⓰ VOL (volume) +/– keys
These keys do not function with this projector.

⓱ SWITCHER/VIDEO MEMORY/INDEX select switch
Selects the function of the SWITCHER/VIDEO MEMORY/INDEX keys.
SWITCHER: to select the input from the PC-3000 or the PC-1271/1271M Signal Interface Switcher.
VIDEO MEMORY: to select the set and adjusted video memory data.
INDEX: to select a projector by its index number when multiple projectors are used.

⓲ SWITCHER/VIDEO MEMORY/INDEX keys
When the SWITCHER/VIDEO MEMORY/INDEX select switch is set to SWITCHER
When the PC-3000 or the PC-1271/1271M Switcher is connected to the projector, press a number key (1 to 8) to select the input from the switcher. Number key 9 and the 10/0 (ALL) key do not function.
To select an input when multiple switchers are connected, set the SWITCHER/VIDEO MEMORY/INDEX select switch to SWITCHER, then press the **SW NO/OFF/GROUP** key. Next press the switcher number (1 to 8) and the input number (1 to 8) in sequence. Be sure to press the keys one after another within 2 seconds.
e.g. To select input 4 of switcher 2, press the keys as follows:
SW NO → 2 → 4.

When the SWITCHER/VIDEO MEMORY/INDEX select switch is set to VIDEO MEMORY
Select the number of the VIDEO MEMORY. To select the data set and adjusted in INPUT MEMORY, press the SW NO/OFF/GROUP key to set VIDEO MEMORY to OFF.

Note
The 10/0 (ALL) key can be used as "10" key only when the select switch is set to VIDEO MEMORY.

When the SWITCHER/VIDEO MEMORY/INDEX select switch is set to INDEX
When multiple projectors are connected, select the device index number of the projector to be adjusted. Press the device index number (1 to 99) and press the ENTER key. Be sure to press the keys one after another within 2 seconds.
e.g. To select 1, press the keys as follows:
0 → 1 → ENTER, or 1 → ENTER.
To select 12, press the keys as follows:
1 → 2 → ENTER.
When adjusting all the projectors simultaneously, press the 10/0 (ALL) key and ENTER key.

Note
Depending on the projector, pressing "0," "0" and "ENTER" is not effective.

To select the projector to be adjusted when the projectors are divided into multiple groups
First select the group index number and then the projector's device index number.
To select a group, press the SW NO/OFF/GROUP key, the group index number (1 to 99) and the ENTER key in sequence. When the group index has a double-digit number, be sure to press the SW NO/OFF/GROUP key before pressing each number key.
Then press the device index number of the projector (1 to 99) and finally press the ENTER key.
e.g. To select the index number 52 projector in group 91, press the keys as follows:
GROUP → 9 → GROUP → 1 → ENTER → 5 → 2 → ENTER.

⓳ INPUT SELECT keys
Select the input signal.
VIDEO: Video or S video signal input from the VIDEO connectors of the projector (VPH-G90U/G90M) or the IFB-G90E Video Interface Board (VPH-G90E).
SELECT VIDEO/S VIDEO: Selects video or S video signal input from the VIDEO connectors after pressing the VIDEO key.
A: The RGB, component or HDTV signal input from the INPUT A connectors of the projector
B: The signal input from the INPUT B section when the optional interface board other than the IFB-40 is installed
C: The signal input from the INPUT C section when the optional interface board is installed.
D: This key does not function with this projector.

Note
To switch the input signal from the INPUT A, INPUT B or INPUT C section to the S VIDEO IN (or Y IN/C IN) connectors, first press the VIDEO key, then press the SELECT VIDEO/S VIDEO key.

⓴ SYS SET (system set) key
When the PC-3000 Signal Interface Switcher is used in the system, press the key to confirm the status of the system, the settings of the interface board, and so on.

㉑ BLKG (blanking) key
Enters the blanking adjustment mode in the pro-user mode.
You can adjust the blanking with the four arrow keys.
For details, see "Blanking Adjustment" on page 28.

㉒ PATTERN key
Displays the internal test patterns of the projector. Each press of the key advances the test pattern sequentially.

㉓ LCD LENS CONTROL keys
These keys do not function with this projector.

㉔ NORMAL key
Erases the test pattern or cancels the various adjustment modes.

㉕ MUTING keys
PIC (Picture): Cuts off the picture. To restore the picture, press the key again.
AUDIO: This key does not funcion with this projector.

Location and Function of Controls

Battery installation

1 Push to open the lid.

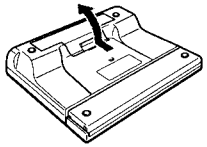

2 Install the three R6 (size AA) batteries (supplied) with the correct polarity.

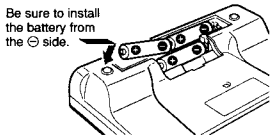

3 Replace the lid.

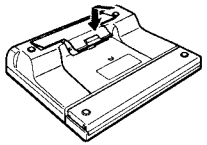

Notes on batteries

- Be careful that the battery orientation is correct when inserting batteries.
- Do not mix old battery with new one, or different types of batteries.
- If you do not intend to use the remote commander for a long time, remove the batteries to avoid damage from battery leakage. If a battery has leaked, remove the batteries, wipe the battery compartment dry and replace the batteries with new ones.

Notes on wireless remote control operation

- Be sure that there is nothing to obstruct the infrared beam between the remote commander and the projector.
- The operation range is limited. The shorter the distance between the remote commander and the projector, the wider the angle within which the remote commander can control the projector.
- The remote control detectors on the projector do not operate when the remote commander is being used as a wired remote control. If you wish to use the remote commander as a wireless remote control, be sure to remove the connecting cable from both the remote commander and the projector.

Connecting the remote commander to the projector

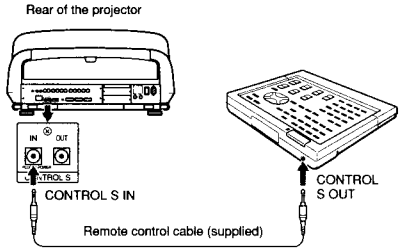

Projecting

Projecting

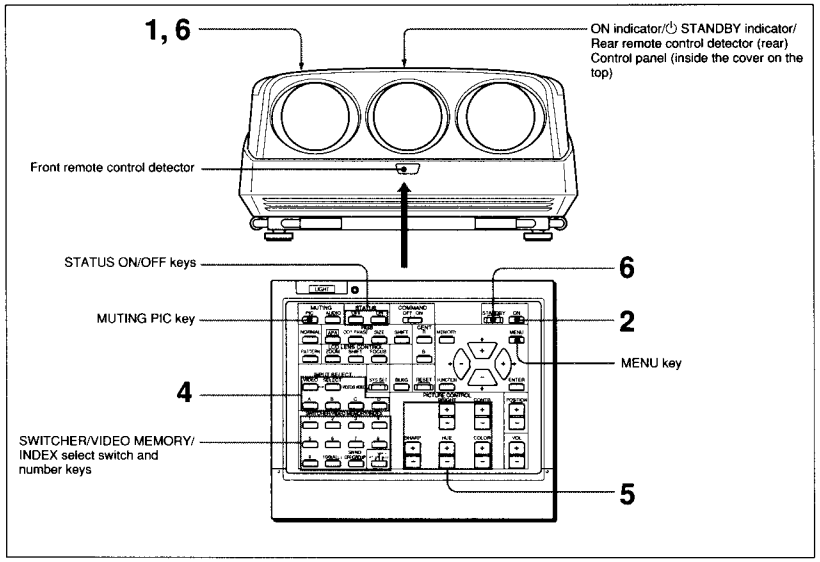

1 Press the MAIN POWER switch on the rear of the projector.
The ⏻ STANDBY indicator lights in orange and the projector goes into the standby mode.

(continued)

Projecting

2 Press the ON key on the remote commander or the control panel.
The ON indicator on the rear of the projector lights in green.

A white screen with the message shown below (warming up screen) appears on the screen. For getting a stable picture, make sure to allow the projector to warm up for 20 minutes after turning it on.
The message disappears temporarily in about 35 seconds, and will appear subsequently for 5 seconds every 30 seconds.

```
For optimum
performance,
white screen will
remain for
20min
For immediate use
push [MENU] key.
```

Press the MENU key to cancel the warming up screen and see the picture immediately after the projector is turned on if, for example, the adjustment has been finished and warming up is not needed.

3 Turn on the power of the connected equipment.

4 Select the input signal to be projected with the INPUT SELECT keys.
VIDEO and SELECT: To project the signal input from the equipment connected to the VIDEO IN or S VIDEO IN (or Y IN/C IN) connectors. [1] Press the VIDEO key, then select VIDEO or S VIDEO by pressing the SELECT key.
A: To project the RGB, component or HDTV signal input from the equipment connected to the INPUT A connectors.
B: To project the signal input from the equipment connected to the optional interface board other than the IFB-40 installed to the INPUT B section.
C: To project the signal input from the equipment connected to the optional interface board installed to the INPUT C section.
When the PC-3000 or PC-1271/1271M Signal Interface Switcher is connected: Set the SWITCHER/VIDEO MEMORY/INDEX select switch to SWITCHER and then select the input with the number keys 1 to 8.

Note

When you select the input signal connected to the INPUT A, INPUT B or INPUT C section, be sure to select the correct signal in the SET SETTING 1 menu. If an incorrect signal is selected, picture may be distorted.
For details, see "The SET SETTING 1 Menu" on page 38.

[1] For the VPH-G90E model, the optional IFB-G90E Video Interface Board is required for using the VIDEO connectors.

5 Adjust the picture.

For details, see "Adjusting the picture" on page 24.

6 To turn the power off, press the STANDBY key on the remote commander or on the control panel of the projector, then set the MAIN POWER switch on the projector to OFF.

To	Press
turn off the on-screen display	the STATUS OFF key. The menus and warning messages appear even if the STANDBY key is pressed. To restore the on-screen display, press the STATUS ON key.
cut off the picture	the MUTING PIC key. To restore the picture, press the MUTING PIC key.

Adjusting the Picture

Adjust the picture for your preference. The adjustment data can be saved in the memory.

1 Adjust with the PICTURE CONTROL +/– keys.

BRIGHT	Brightness
CONTR	Picture contrast
COLOR	Color intensity
HUE	Hue
SHARP	Sharpness

The adjustment levels are digitally displayed with a range of MIN, 1, 2, ... 99, MAX.

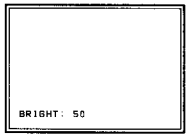

2 Press the MEMORY key to save the data.

Restoring the initial data

1 Press the PICTURE CONTROL key of the item which you want to reset to the initial data.

2 Press the RESET key.
The selected item is reset to the initial data.

Notes

- The COLOR, SHARP and HUE keys do not function with the RGB input signals.
- The HUE and COLOR keys do not function if the input signal is black and white.
- The HUE key does not function with the PAL or SECAM color input source.

Centering Adjustment

The three colors, red, green and blue must converge for correct projection. If they do not converge, centering adjustment is necessary.

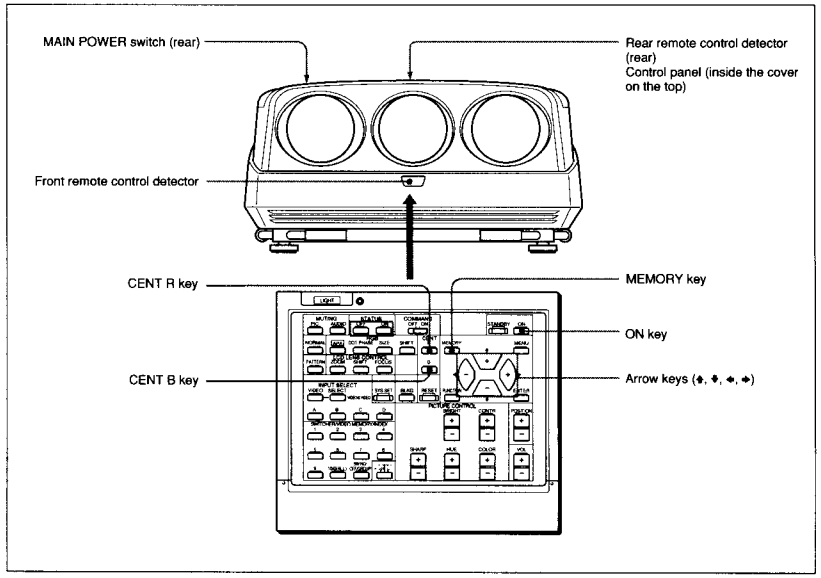

1 Turn the projector on by switching on the MAIN POWER switch and pressing the ON key on the remote commander.

2 Set the projector to the pro-user mode.
For details, see "Pro-user mode" on page 31.

3 Press the CENT R key.
The built-in CROSS HAIR test pattern appears and the red line will be adjustable.

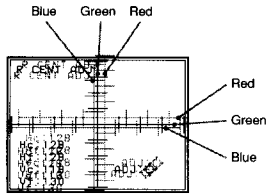

(continued)

Centering Adjustment

4 Press the arrow keys to move the red line until the red and green lines converge and become yellow.
The red line moves according to the direction of the arrow.

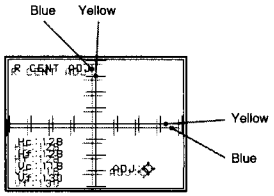

5 Press the CENT B key.
The blue line will be adjustable.

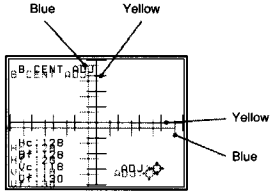

6 Press the arrow keys to move the blue line until the blue and yellow lines converge.
The blue line moves according to the direction of the arrow.
When all three color lines converge, the test pattern will become white.

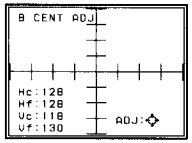

7 Press the MENU key.
The normal display is restored.

Adjusting the Size And Shift of the Picture

The size and shift of the input picture can be adjusted to fit the screen in the pro-user mode only.

Note
When you connect multiple input sources to the projector, such as when using the switcher, adjust the picture size, picture shift and blanking for each input signal. The information about the input signal is shown in the INPUT INFO menu.

SIZE adjustment

Adjust the picture size if it does not fit the screen.

1 Press the RGB SIZE key.
(Use the RGB SIZE key even for the signal other than RGB.)

2 Adjust the picture size with the arrow keys.
- ↑: The vertical size is expanded.
- ↓: The vertical size is reduced.
- →: The horizontal size is expanded.
- ←: The horizontal size is reduced.

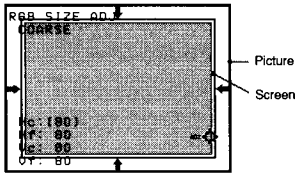

To adjust precisely, press the RGB SIZE key again. The projector enters the FINE adjustment mode, and you can fine adjust the size. By pressing the RGB SIZE key again, the COARSE adjustment mode is resumed.

3 Press the MENU key to save the adjustment data.

Resetting to the initial preset size

The picture size of the video signal can be reset to the initial preset size by pressing the RESET key in RGB SIZE adjustment mode. (The picture size of signals other than the video signal cannot be reset.)

SHIFT adjustment

If the picture needs to be shifted to fit the screen, adjust the position of the picture.

1 Press the RGB SHIFT key.
(Use the RGB SHIFT key even for the signal other than RGB.)

(continued)

Adjusting the Size And Shift of the Picture

2 Adjust the shift with the arrow keys.

- ↑ : The picture is shifted upward.
- ↓ : The picture is shifted downward.
- → : The picture is shifted rightward.
- ← : The picture is shifted leftward.

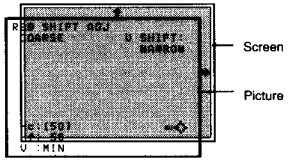

To adjust precisely, press the RGB SHIFT key again. The projector enters the FINE adjustment mode, and you can fine adjust the horizontal shift only. By pressing the RGB SHIFT key again, the COARSE adjustment mode is resumed.

Note

When the RGB or HDTV signal is input, the adjustable range of the vertical shift (V SHIFT) can be set to WIDE or NARROW by pressing the POSITION +/– keys. When the video, S video, component or SDI 4 : 2 : 2 signal is input, V SHIFT is automatically fixed to NARROW and the adjustable range of the vertical shift will become narrower than that of the RGB or HDTV signal.

3 Press the MEMORY key to save the adjustment data.

Resetting to the initial preset position

The position of the picture of the video signal can be reset to the initial preset position by pressing the RESET key in RGB SHIFT adjustment mode. (The position of the picture of signals other than the video signal cannot be reset.)

Blanking adjustment

If the displayed picture is larger than the screen, cut off the excess parts.

1 Press the BLKG key.

2 Press the POSITION +/– keys or the BLKG key to select the part to be adjusted.

- When you press the + key or the BLKG key, the position cycles through the following order: TOP → BOTTOM → LEFT → RIGHT → TOP ...
- When you press the – key, the position cycles in reverse order.

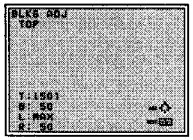

3 Adjust with the arrow keys.

- Press the ↓ and ↑ keys to adjust the TOP and BOTTOM positions.
- Press the ← and → keys to adjust the LEFT and RIGHT positions.

4 Press the MEMORY key to save the adjustment data.

Adjustments and settings using the menu

Using the Menu

The projector is equipped with an on-screen menu for making various adjustments and settings.
There are two menu modes : user mode and pro-user mode, to limit the menu items according to the level of the operator of the projector.

Basic Menu Operation

1 Press the MENU key.
The menu display appears.
The menu presently selected is highlighted in blue.

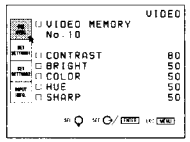

2 Use the ↓ or ↑ keys to select a menu, then press the → key or the ENTER key.
The selected menu appears.
The setting items that are indicated in white cannnot be selected.

Menu items Setting items

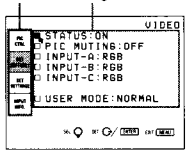

3 Use the ↓ or ↑ keys to select a setting item, then press the → key or the ENTER key.
The adjustment menu or the setting menu (pop-up menu) appears.

To go to the next page

If there are two or more pages for a menu, the ▼ indication appears below the bottom item. Move the cursor to the bottom item with the ↓ key, then press the ↓ key.

To go back to the previous page

Move the cursor to the top item with the ↑ key, then press the ↑ key.

(continued)

4 Make adjustment or setting on the menu.

To change the adjustment level

To increase the level, press the ↑ or → key.
To decrease the level, press the ↓ or ← key.
Then press the ENTER key to store the level. The original screen is restored.

To select an item

Use the ↓ or ↑ key to select an item in a pop-up menu. For some items, the result or effect of the selection is simultaneously reflected on the screen. For other items, press the ← key or the ENTER key to confirm the selection. The selected setting is stored and the pop-up menu disappears.

Pop-up menu

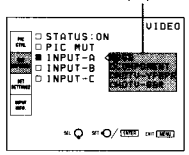

For details on setting individual items, see the relevant menu pages.

To clear the menu display

Press the MENU key or NORMAL key.
The menu display also disappears automatically if no key is pressed for about one minute.

Memory of the settings

The settings in the menus are automatically stored in the projector memory. You can also store the settings by pressing the MEMORY key.

Menu Modes

There are two menu modes for this projector.

User mode

This is the menu mode for end users. Only the minimum menu items for usual settings and adjustments appear in this mode.

No indication for user mode

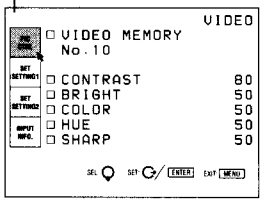

The user mode is factory preset. By pressing the MENU key for the first time, the user mode appears.

Pro-user mode (P)

This is the menu mode for advanced end users who know the operation and functions of the projector very well. The menu items for detailed settings and adjustments are provided so that they can get the most of the projector functions.

Pro-user mode indication

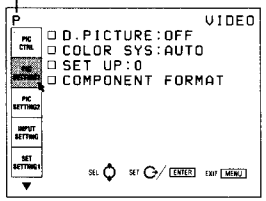

To set to the pro-user mode

1 Press the MENU key.
The menu in the user mode appears.

2 Press the ↓ or ↑ key to select SET SETTING 1, then press the ENTER or → key.

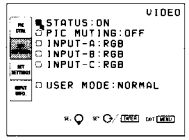

3 Press the ↓ or ↑ key to select USER MODE, then press the ENTER or → key.

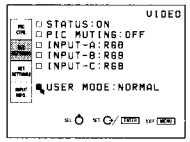

4 Press the ↓ or ↑ key to select PRO in the pop-up menu, then press the ENTER or ← key.
The menu disappears.

5 Press the MENU key.
The menu in the pro-user mode appears with the letter "P" at the top-left of the screen.

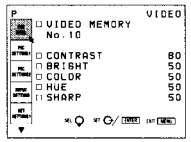

To reset to the user mode

Perform the same steps for setting to the pro-user mode, and set USER MODE in the SET SETTING 1 menu to NORMAL.
Press the ENTER or ← key to turn off the menu. When the MENU key is pressed again, the menu in the user mode appears.

The PIC CTRL (Picture Control) Menu [User/Pro-user modes]

The PIC CTRL menu displays the information on the picture adjustments.
To adjust the picture, use the keys on the remote commander.
Items that can be adjusted are highlighted in green.
You cannot select the items indicated in white.

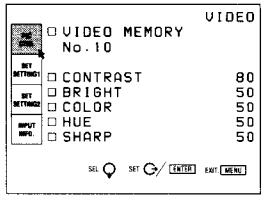

VIDEO MEMORY

Indicates the number of video memory.
The number 1 to 10 can be selected with the VIDEO MEMORY keys on the remote commander.

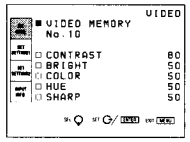

The video memory is a part of the SET MEMORY, and stores 10 types of the aspect ratio, picture quality, etc.
Select a video memory number 1 to 10, then the aspect ratio and picture quality that you adjust will be stored in the selected video memory.
If you want to use the aspect ratio and picture quality data stored in the INPUT MEMORY, select OFF.

Contents of the video memory data

COLOR TEMPERATURE, D. PICTURE, V SHIFT WIDE/NARROW, COMPONENT FORMAT, COMB FILTER, DRC LEVEL, CONTRAST, BRIGHT, COLOR, HUE, SHARP, RGB SIZE, RGB SHIFT, BLANKING

Aspect ratios preset at the factory

The data for the following aspect ratios have been stored in each video memory number at the factory.

No.	Aspect ratio
1	4 : 3
2	4 : 3
3	4 : 3
4	4 : 3
5	4 : 3
6	16 : 9
7	16 : 9
8	16 : 9
9	16 : 9
10	16 : 9

CONTRAST

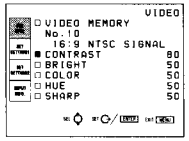

The higher the setting, the greater the contrast.
The lower the setting, the lower the contrast.

BRIGHT (brightness)

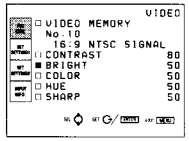

The higher the setting, the brighter the picture.
The lower the setting, the darker the picture.

COLOR

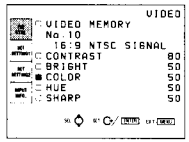

The higher the setting, the greater the intensity.
The lower the setting, the lower the intensity.

HUE

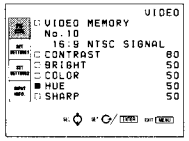

At high settings, the picture becomes greenish.
At low settings, the picture becomes purplish.

SHARP (sharpness)

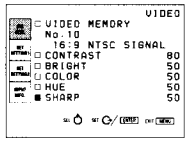

The higher the setting, the sharper the picture.
The lower the setting, the softer the picture.

Input signals and adjustable/setting items

Item	Input signal			
	Video or S video (Y/C)*	Component SDI 4:2:2	HDTV	RGB
VIDEO MEMORY	Y	Y	Y	Y
CONTRAST	Y	Y	Y	Y
BRIGHT	Y	Y	Y	Y
COLOR	Y	Y	Y	N
HUE	Y (NTSC3.58/ NTSC4.43 system only)	Y	Y	N
SHARP	Y	Y	Y	N

Y: Adjustable/can be set
N: Not adjustable/cannot be set

* For the VPH-G90E model, the optional IFB-G90E Video Interface Board is required.

The PIC SETTING 1 (Picture Setting 1) Menu

[Pro-user mode]

The PIC SETTING 1 menu is used for setting the picture quality.
Items that can be set are highlighted in green.
You cannot select the items indicated in white.

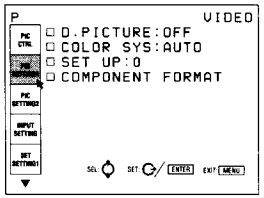

D. (Dynamic) PICTURE

Emphasizes the black of the composite video, S video (Y/C) or component signal.

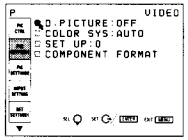

ON: Emphasizes the black to produce a bolder "dynamic" picture.
OFF: Reproduces the dark portions of the picture accurately, in accordance with the source signal.

COLOR SYS (System)

Selects the color system of the composite video or S video (Y/C) signal.

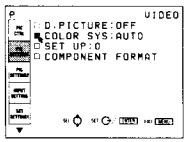

Select among AUTO, NTSC3.58, PAL, SECAM, NTSC4.43 and PAL-M.
Normally, set to AUTO.
If the picture is distorted or colorless, select the color system according to the input signal.

SET UP

Changes the set up level (standard black level) to 0 IRE or 7.5 IRE according to the NTSC source signal.

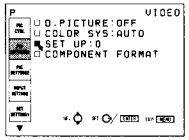

0 IRE: Normally, set to this position.
7.5 IRE: Set to this position when the black color is too light.

COMPONENT FORMAT

Selects the format of the component input signal.

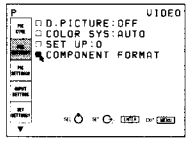

SMPTE/EBU-N10: Set to this position if the input signal is the SMPTE or EBU-N10 format component signal.
BETACAM7.5: Set to this position if the input signal is the Betacam format component signal.

Input signals and adjustable/setting items

Item	Input signal			
	Video or S video (Y/C)*	Component SDI 4:2:2	HDTV	RGB
D. PICTURE	Y	Y	N	N
COLOR SYS	Y	N	N	N
SET UP	Y (NTSC3.58/ NTSC4.43 system only)	N	N	N
COMPONENT FORMAT	N	Y	N	N

Y: Adjustable/can be set
N: Not adjustable/cannot be set

* For the VPH-G90E model, the optional IFB-G90E Video Interface Board is required.

The PIC SETTING 2 (Picture Setting 2) Menu

[Pro-user mode]

The PIC SETTING 2 menu is used for setting the picture quality.
Items that can be set are highlighted in green.
You cannot select the items indicated in white.

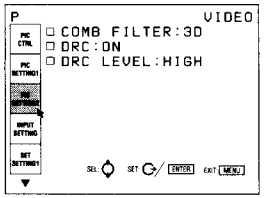

COMB FILTER

Selects the comb filter which reduces the cross color and dot interference of the NTSC signal to reproduce clear images.

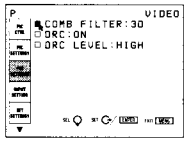

3D: Three-dimensional comb filter. Normally use this comb filter.
3LINE: 3LINE comb filter. This comb filter may be more effective for fast-moving pictures.

DRC (Digital Reality Creation)

Set to ON to make the NTSC signal 4-times density image.

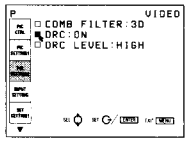

Normally set to ON. When a 15 kHz signal is input, the DRC function activates. When the DRC is not required, set to OFF.

Note
The DRC is effective only when the 15 kHz signal complies with the timing of the video signal. If it has a particular timing, the image may be disturbed with the DRC ON.

DRC LEVEL

Selects the effect of the DRC for the NTSC signal.
This item can be selected only for an interlaced signal.

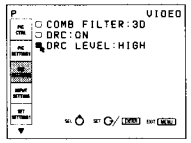

HIGH is preset at the factory. Select LOW if the picture is glaring.

Input signals and adjustable/setting items

Item	Input signal			
	Video or S video (Y/C)*	Component SDI 4:2:2	HDTV	RGB
COM FILTER	Y (NTSC3.58 system only)	N	N	N
DRC	Y	Y	N	Y (15 kHz RGB only)
DRC LEVEL	Y	Y	N	Y (15 kHz RGB only)

Y: Adjustable/can be set
N: Not adjustable/cannot be set

* For the VPH-G90E model, the optional IFB-G90E Video Interface Board is required.

The INPUT SETTING Menu [Pro-user mode]

The INPUT SETTING menu is used to adjust the input signal.
Items that can be adjusted are displayed in green.
You cannot select the items indicated in white.

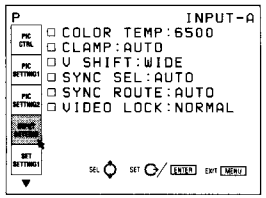

COLOR TEMP (Temperature)

Selects the appropriate color temperature according to your application and the input source signal.

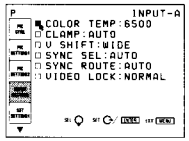

9300: standard color temperature for consumer-use products
6500: standard color temperature for business-use products
5400: standard color temperature for HDTV
3200: standard color temperature for medical products and studio cameras
CUSTOM: If you wish to make the color of a particular input signal uniform to that of another display, select CUSTOM, then adjust the white balance.

CLAMP

Corrects the luminance of the input picture.

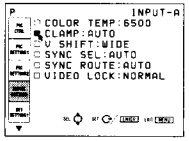

CLAMP is used as a standard for setting the black level of a picture correctly. The standard position of the clamp depends on the kind of sync signal being used. Normally, the projector CPU judges the signal and sets the position automatically. However, the CPU can misjudge the signal because of noise. If the luminance of the picture seems to be incorrect, the clamp position may need to be changed.

AUTO: Automatic setting mode. Normally set to this position.
SonG: Set to this position if the black seems too light or greenish.
H/C: Set to this position if the picture is too dark or luminance is unstable.
HP: If the luminance is still incorrect after changing to the SonG or H/C position, set to this position and perform the H-SHIFT adjustment.
TRI-LEVEL S: Set to this position if the picture is dark when using the tri-level sync.

Notes

- If the external signal does not have the SonG signal, the H/C position is recommended.
- If the luminance is still incorrect after changing the clamp setting, check the input signal and the connections.

V (Vertical) SHIFT

Sets the adjustable range of the vertical shift of the input signal.

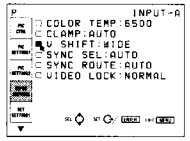

WIDE: Normally, set to this position (factory preset).
NARROW: When some signal such as a superimposed signal with unstable vertical sync. signal is input, the picture may be distorted vertically. In this case, set to this position. Adjustable range in the lower direction will become narrow.

Note

When the video, S video, component or SDI 4:2:2 signal is input, V SHIFT is fixed to NARROW.

SYNC SEL (select)

Selects the sync signal when using an external sync signal.

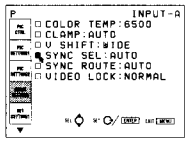

When an RGB signal is input

AUTO: Automatic setting mode. Normally set to this position.
SonG: Set to this position if you project the picture using the sync on G signal.
C: Set to this position if you project the picture using the composite sync signal.
HV: Set to this position when using the horizontal/vertical sync signal.

When an HDTV signal is input

You can select the items below instead of the above items.

AUTO: Automatic setting mode. Normally set to this position.
INT: Set to this position when using the internal sync signal.
EXT [C]: Set to this position when using the external composite sync signal.
EXT [HV]: Set to this position when using the external horizontal/vertical sync signal.

Note

For an RGB signal, this item can be selected only when SonG and C/HV are included.

SYNC ROUTE

Selects the route of the sync signal when the RGB signal is input to INPUT A.

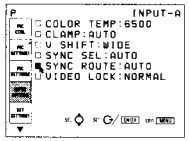

AUTO: Automatic setting mode. Normally set to this position.
NORMAL: Set to this position for a normal sync input, that is, when there is no video signal on the sync line.
SYNC w VIDEO: Set to this position when the video signal is on the sync line and the sync of the image is distorted in the AUTO position.

VIDEO LOCK

Selects the range of the frequency deviation of the input signal so that the INPUT MEMORY data is switched automatically if the frequency deviation exceeds the selected range. This item can be selected only for RGB input signals.

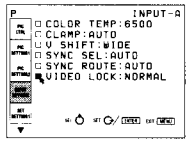

NORMAL: Normally set to this position.
WIDE: Set to this position if the input signal is unstable or flickers. This phenomenon may appear during variable speed playback by the VCR. etc.

Input signals and adjustable/setting items

Item	Input signal			
	Video or S video (Y/C)*	Component SDI 4:2:2	HDTV	RGB
COLOR TEMP	Y	Y	Y	Y
CLAMP	N	N	N	Y
V SHIFT	N	N	Y	Y
SYNC SEL	N	N	Y	Y
SYNC ROUTE	N	N	N	Y
VIDEO LOCK	N	N	N	Y

Y: Adjustable/can be set
N: Not adjustable/cannot be set

* For the VPH-G90E model, the optional IFB-G90E Video Interface Board is required.

The SET SETTING 1 Menu [User/Pro-user modes]

The SET SETTING 1 menu is used for changing the default settings of the projector.
Items that can be adjusted are highlighted in green.
You cannot select the items indicated in white.

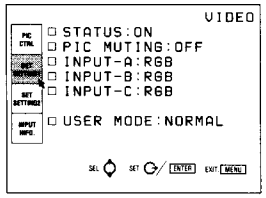

STATUS

Selects the on-screen display mode.

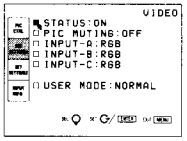

ON: Shows all of the on-screen displays.
OFF: Turns off all of the on-screen displays except for warning messages and menu displays.

PIC. (Picture) MUTING

Set to ON to cut off the picture.
When set to ON, "PIC MUTING" appears on the screen.

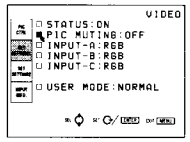

INPUT A

Selects the signal input from the INPUT A connectors.

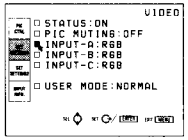

RGB: Inputs the RGB signal.
COMPONENT: Inputs the component signal.
HDTV-YPBPR: Inputs the HDTV(YPBPR) signal.
HDTV-GBR: Inputs the HDTV(GBR) signal.

INPUT B

Selects the signal input from the IFB-12/12A Signal Interface Board (not supplied) installed to the INPUT B section and set to the INPUT mode.

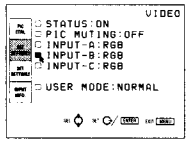

RGB: Inputs the RGB signal.
COMPONENT: Inputs the component signal.
HDTV-YPBPR: Inputs the HDTV(YPBPR) signal.
HDTV-GBR: Inputs the HDTV(GBR) signal.
VIDEO: Inputs the composite video signal.
S-VIDEO: Inputs the S video signal.

Note
When a signal interface board other than the IFB-12/12A is installed or the IFB-12/12A is set to the OUTPUT mode, the menu items cannot be selected.

INPUT C

Selects the signal input from the IFB-12/12A Signal Interface Board (not supplied) installed to the INPUT C section and set to the INPUT mode.

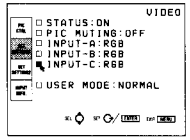

RGB: Inputs the RGB signal.
COMPONENT: Inputs the component signal.
HDTV-YPBPR: Inputs the HDTV(YPBPR) signal.
HDTV-GBR: Inputs the HDTV(GBR) signal.
VIDEO: Inputs the composite video signal.
S-VIDEO: Inputs the S video signal.

Note
When a signal interface board other than the IFB-12/12A is installed or the IFB-12/12A is set to the OUTPUT mode, the menu items cannot be selected.

USER MODE

Selects the menu mode between the user mode and the pro-user mode.

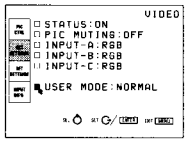

NORMAL: User mode
PRO: Pro-user mode

For details, see "Menu Modes" on page 30.

The SET SETTING 2 Menu [User/Pro-user modes]

The SET SETTING 2 menu is used for changing the default settings of the projector.
Items that can be adjusted are highlighted in green.
You cannot select the items indicated in white.

User mode

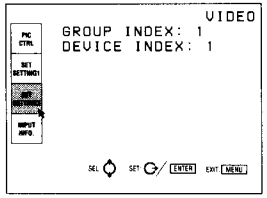

GROUP INDEX

Indicates the group index number when the group index is set.

Note
The group index number can be set in the pro-user mode.

DEVICE INDEX

Indicates the device index number which is set by the DEVICE INDEX switches on the rear of the projector.

The SET SETTING 2 Menu

Pro-user mode

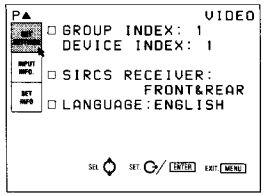

GROUP INDEX

Sets the group index number with which multiple projectors and switcher are assigned in the same group. 1 to 99 group index number can be set.

DEVICE INDEX

Indicates the device index number which is set by the DEVICE INDEX switches on the rear of the projector.

SIRCS RECEIVER

Selects the remote control detectors on the front and rear of the projector, if the wireless remote control does not operate correctly due to the influence of a fluorescent lamp, etc.

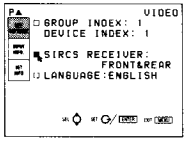

FRONT & REAR: Activates both the front and rear detectors.
FRONT: Activates the front detector only.
REAR: Activates the rear detector only.
OFF: Deactivates both the front and rear detectors.

LANGUAGE

Selects the language used in the on-screen displays.

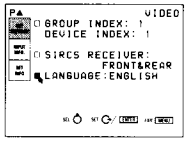

Available languages are: English, FRANCAIS (French), DEUTSCH (German), ITALIANO (Italian), ESPANOL (Spanish), 日本語 (Japanese) and 中文 (Chinese).

The INPUT INFO (Information) Menu [User/Pro-user modes]

The INPUT INFO menu displays the information on the current input signal.

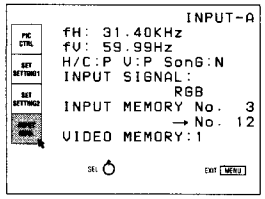

fH (Horizontal frequency)

Indicates the horizontal frequency of the input signal. This indication is not an absolute value, but is only used as a guide.
The horizontal frequency of the input signal is indicated in green; that of the internal signal in yellow.

fV (Vertical frequency)

Indicates the vertical frequency of the input signal. This indication is not an absolute value, but is only used as a guide.
The vertical frequency of the input signal is indicated in green; that of the internal signal in yellow.

H/C (Horizontal/Composite sync)
V (Vertical sync)
SonG (Sync on Green)

Indicates the polarity and use of each sync signal.
P: The polarity of the sync signal is positive.
N: The polarity of the sync signal is negative.
–: No sync signal is input.

INPUT SIGNAL

Displays the type of current input signal.
INT. OSC: No input
COMPONENT: Component input signal
IDTV: IDTV input signal from the optional PC-1271/1271M Signal Interface Switcher via the optional IFB-3000 Interface Board installed to the PC-1271/1271M.
15 kRGB: 15 kHz RGB input signal
RGB: RGB input signal
HDTV YPBPR: HDTV YPBPR input signal
HDTV GBR: HDTV GBR input signal
SDI 4:2:2: SDI 4:2:2 input signal
DRC: when the DRC is set to ON

Video or S video signals
NTSC 3.58: NTSC 3.58 input signal
NTSC 4.43: NTSC 4.43 input signal
PAL: PAL input signal
PAL-M: PAL-M input signal
SECAM: SECAM input signal
B/W: Black and white input signal
S-VIDEO: S video input signal

INPUT MEMORY No.

The upper number is the memory number of the data automatically loaded when the current signal is input. The lower number is the new memory number in which the adjustment data of the current input signal is stored. The existing memory number is displayed in green, and a new memory number in yellow.

VIDEO MEMORY

The selected video memory number is indicated.

The SET INFO (information) Menu [Pro-user mode]

The SET INFO menu displays the information on the serial number.

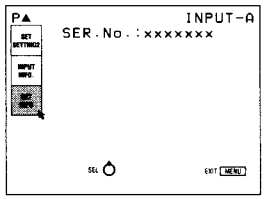

SER. (serial) No.

Indicates the serial number of the projector.

Installation/connection examples

Installation Examples

Installation and the preliminary adjustments should be carried out by Qualified Sony Personnel. This projector allows you to project the picture between 90 and 300 inches.

Installation Examples

Installation 1: Floor Installation Using Front Projection Flat Screen

Be sure that the projector is level to the floor.

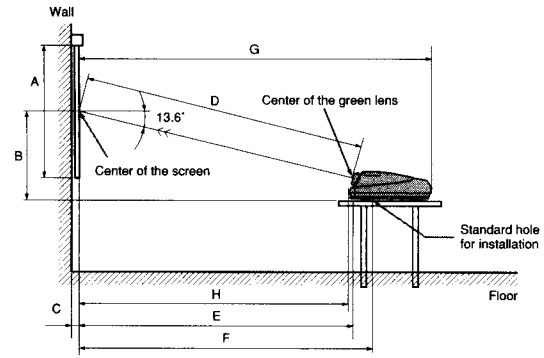

B: Difference in height between the projector's bottom surface and the center of the screen
E: Horizontal distance between the center of the screen and the center of the green lens
F: Horizontal distance between the center of the screen and the standard hole for installation
H: Horizontal distance between the center of the screen and the projector's front surface

Tolerances
B: ±5%
Other measurements: 0% to +5%

The distances in gray are the factory preset settings. Unit:mm (inches)

Screen size (inches)	90	100	120	150	180	200	250	300
A (Vsize)	1372 (54 1/8)	1524 (60)	1829 (72 1/8)	2286 (90)	2743 (108)	3048 (120)	3810 (150)	4572 (180)
B (Hcent)	889 (35)	950 (37 1/2)	1074 (42 3/8)	1288 (50 3/4)	1488 (58 5/8)	1621 (63 7/8)	1942 (76 1/2)	2287 (90 1/8)
C (Width)			28[a] (1 1/8)	32[b] (1 5/16)				
D (TD)	2587 (101 7/8)	2847 (112 1/8)	3373 (132 7/8)	4285 (168 3/4)	5137 (202 1/4)	5702 (224 1/2)	7065 (278 1/4)	8533 (336)
E (Xlens)	2514 (99)	2767 (109)	3278 (129 1/8)	4165 (164)	4993 (196 5/8)	5542 (218 1/4)	6867 (270 3/8)	8294 (326 5/8)
F (Lhole)	2795 (110 1/8)	3048 (120)	3559 (140 1/8)	4445 (175)	5273 (207 5/8)	5823 (229 3/8)	7147 (281 1/2)	8574 (337 5/8)
G (Lmax)	3520 (138 5/8)	3773 (148 5/8)	4284 (168 3/4)	5171 (203 5/8)	5999 (236 1/4)	6548 (257 7/8)	7873 (310)	9300 (366 1/4)
H (Lfront)	2437 (96)	2690 (106)	3201 (126 1/8)	4088 (161)	4916 (193 5/8)	5465 (215 1/4)	6790 (267 3/8)	8217 (323 5/8)

a) Sony VPS-100FM
b) Sony VPS-120FH and VPS-120FM

Installation 2: Ceiling Installation Using Front Projection Flat Screen

Use the PSS-90 Projector Suspension Support (not supplied).

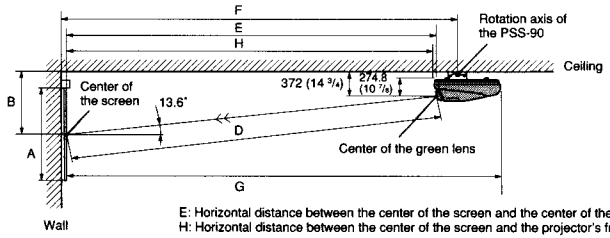

E: Horizontal distance between the center of the screen and the center of the green lens
H: Horizontal distance between the center of the screen and the projector's front surface

Tolerances
B: ±5%
Other measurements: 0% to +5%

Unit:mm (inches)

Screen size (inches)	90	100	120	150	180	200	250	300
A (Vsize)	1372 (54 1/8)	1524 (60)	1829 (72 1/8)	2286 (90)	2743 (108)	3048 (120)	3810 (150)	4572 (180)
B (Hcent)	985 (38 7/8)	1046 (41 1/4)	1170 (46 1/8)	1384 (54 1/2)	1584 (62 3/8)	1717 (67 5/8)	2038 (80 1/4)	2383 (93 7/8)
D (TD)	2587 (101 7/8)	2847 (112 1/8)	3373 (132 7/8)	4285 (168 3/4)	5137 (202 1/4)	5702 (224 1/2)	7065 (278 1/4)	8533 (336)
E (Xlens)	2514 (99)	2767 (109)	3278 (129 1/8)	4165 (164)	4993 (196 5/8)	5542 (218 1/4)	6867 (270 3/8)	8294 (326 5/8)
F (Lhole)	2932 (115 1/2)	3185 (125 1/2)	3696 (145 5/8)	4310 (169 3/4)	5138 (202 3/8)	5687 (224)	7012 (276 1/8)	8439 (332 1/4)
G (Lmax)	3520 (138 5/8)	3773 (148 5/8)	4284 (168 3/4)	5171 (203 5/8)	5999 (236 1/4)	6548 (257 7/8)	7873 (310)	9300 (366 1/4)
H (Lfront)	2437 (96)	2690 (106)	3201 (126 1/8)	4088 (161)	4916 (193 5/8)	5465 (215 1/4)	6790 (267 3/8)	8217 (323 5/8)

Connection Examples

When making connections:

- Before connecting any cables, make sure that each piece of equipment to be connected is turned off.
- Use cables appropriate for the equipment to be connected.
- A loose connection may cause hum or noise.
- When disconnecting a cable, pull it out from the plug; not the cable itself.
- Also refer to the instruction manual of the equipment to be connected.

Connecting a BNC connector:

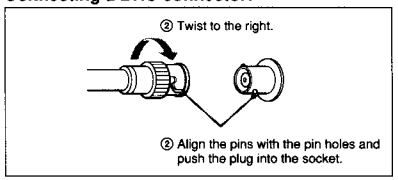

Connecting Directly to the Projector

Use the IFU-1271/1271M Signal Interface Unit.

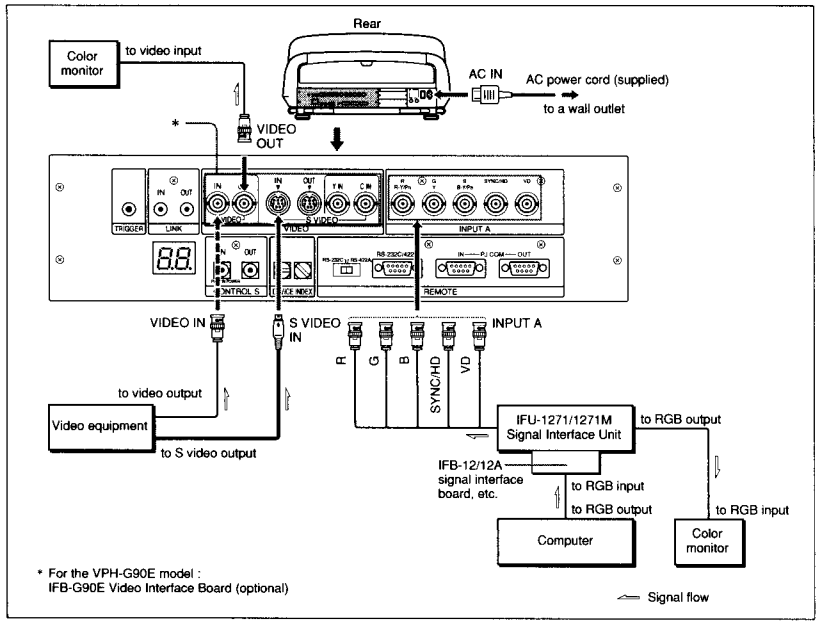

Setting up

- Set INPUT A in the SET SETTING 1 menu *(page 38)* to RGB.
- Select VIDEO or S VIDEO by pressing the INPUT SELECT keys on the remote commander.

Connecting Multiple Projectors

This is an example to connect multiple projectors directly using the PJ COM interface.
Install the optional IFB-12/12A Signal Interface Board to the INPUT B section of the projector.

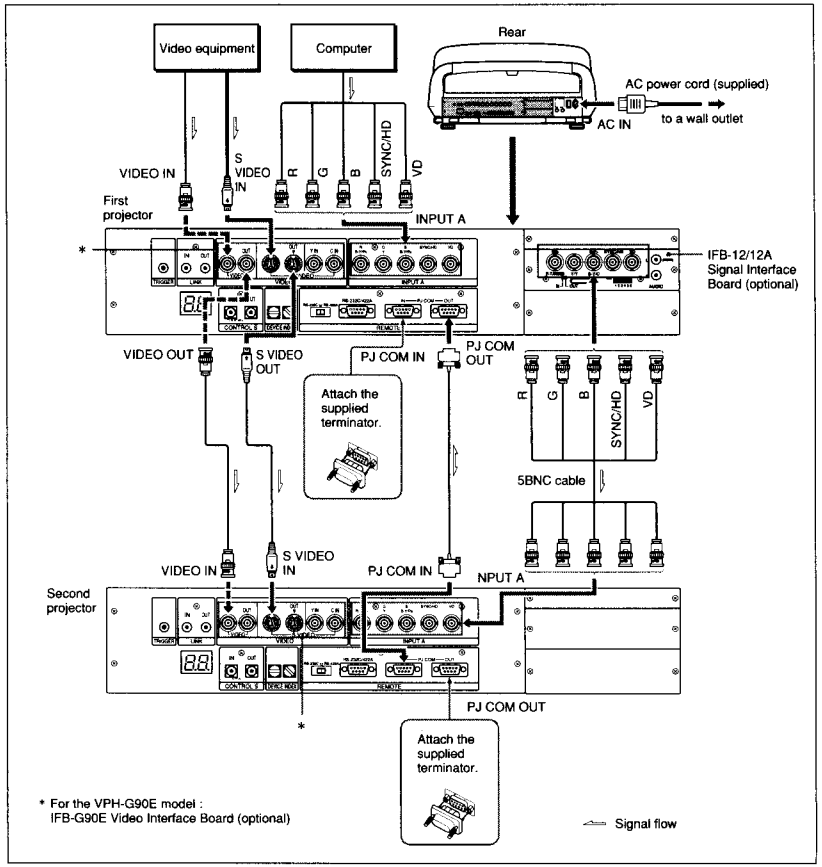

(continued)

Connection Examples

Note

Be sure to terminate the PJ COM IN or OUT connector not in use by attaching the supplied terminator.

Setting up

- Set the IN/OUT selector on the IFB-12/12A to OUT (output). The signal input to INPUT A is output from the IFB-12/12A.
- Set the device index number of the first projector which is connected directly to the video equipment or computer to "01," and the second projector to "02"*(page 52)*.
- When using the remote commander as a wireless remote control, activate the remote control detector of a piece of the equipment in the system only and deactivate those of the other equipment. Perform the setting on the projector using "SIRCS RECEIVER" in the SET SETTING 2 menu *(page 40)*.

Using the PC-3000 Signal Interface Switcher

When you connect the PC-3000 Signal Interfrace Switcher (not supplied) to the INPUT A section, you can connect easily various input sources and switch them by pressing the SWITCHER/VIDEO MEMORY/INDEX keys on the remote commander.

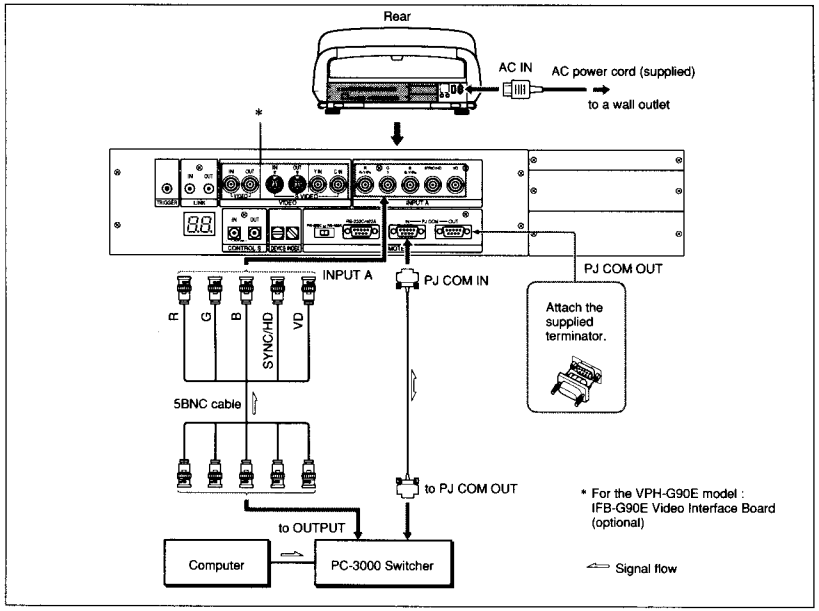

Note

Be sure to terminate the PJ COM IN or OUT connector not in use by attaching the supplied terminator.

Setting up

- Set the device index number of the projector to "01" *(page 52)*.
- Set the switcher number to "1"on the switcher.
  For setting, refer to the Operating Instructions of the switcher.
- When using the remote commander as a wireless remote control, activate the remote control detector of a piece of the equipment in the system only and deactivate those of the other equipment. Perform the setting on the projector using "SIRCS RECEIVER" in the SET SETTING 2 menu *(page 40)*.
  For setting on the switcher, refer to the Operating Instructions of the switcher.

Connection Examples

Confirming the System Construction

After all the connections are complete, confirm that equipment of the system is properly setup.

1 Connect the AC power cords of all equipment to the AC outlets.

2 Press the SYS SET key on the remote commander or the control panel. Information on the system construction and the settings of the interface boards, etc. are automatically confirmed. Then the message disappears.

Note

When you want to use the projector without connecting the switcher after using the switcher in the system connections, it is necessary to confirm the system construction again by pressing the SYS SET key after all the connections are complete. If you press the key, "Master Switcher not exit" appears, but the system construction is automatically recognized.

When a system error is detected

The following messages are displayed on the screen.

Message	Remedy
Master Switcher not exist.	Set the switcher that outputs the signal to the projector to number 1.
Same DEVICE INDEX for Projector detected.	Change either number of the projectors that have the same number.
Same DEVICE INDEX for Switcher detected.	Change either number of the switchers that have the same number.

Using the PC-1271/1271M Signal Interface Switcher

When you install the optional IFB-40 Signal Interface Board to the projector and connect the PC-1271/1271M Signal Interface Switcher to the IFB-40, you can connect easily various input sources.
You can select the input to the switcher easily by pressing the SWITCHER/VIDEO MEMORY/INDEX keys on the remote commander.

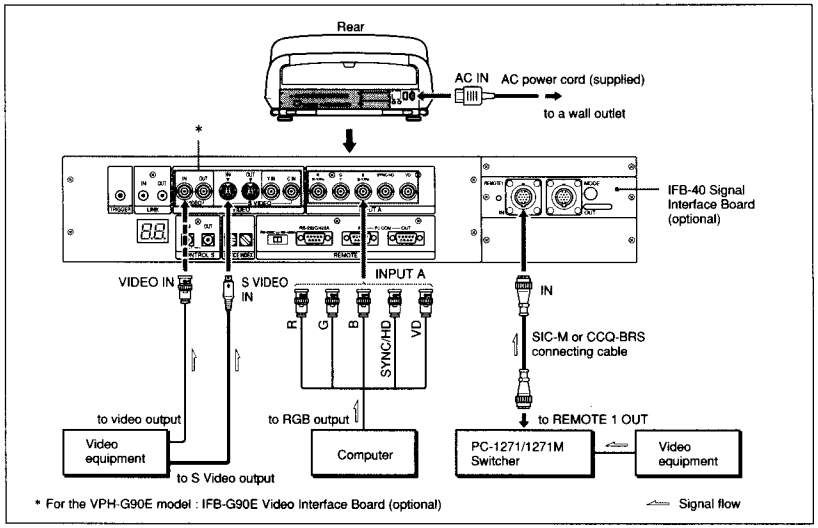

Choose the appropriate cable from the following table.

1 m	2 m	5 m	10 m	15 m	25 m	50 m
—	CCQ-2BRS	CCQ-5BRS	CCQ-10BRS	—	CCQ-25BRS	CCQ-50BRS
SIC-M-1	—	SIC-M-5	—	SIC-M-15	SIC-M-25	SIC-M-50

Notes

- Insert the female and male plugs of the SIC-M or CCQ-BRS cable correctly.
- You can extend the SIC-M or CCQ-BRS cable up to 50 m.
- The video signal input to the IFB-40 installed to the INPUT B section should not exceed 70 MHz. When projecting the video signal which exceeds 70 MHz, connect the signal source to the INPUT A connectors using the 5BNC cables.

Setting up

- Set INPUT-A in the SET SETTING 1 menu *(page 38)* to RGB.
- Select VIDEO or S VIDEO by pressing the INPUT SELECT keys on the remote commander.
- Set the SINGLE/SECOND/OTHER select switch on the switcher to SINGLE.

Setting the Index Numbers

When you connect multiple projectors in your system, you have to set the group index and device index numbers for each projector.

To set the group index number

If you set the same group index number to multiple projectors and switchers, you can operate them simultaneously, for example, to select the input, by designating the group index number.

1 Set the projector to the pro-user mode.
For details, see "Menu Modes" on page 30.

2 Display the SET SETTING 2 menu, select GROUP INDEX by pressing the ↓ or ↑ key, and press the ENTER key.

3 Set a group index number 1 to 99 by pressing the ← or → key, then press the ENTER key.

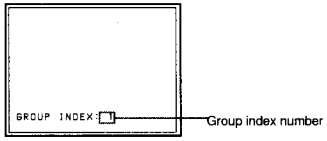

4 Press the MENU key to exit the menu mode.

To set the device index number

If you set the device index number, you can control each projector individually with the supplied remote commander.
Set the device index number with the DEVICE INDEX switches on the rear of the projector. Device index number "01" is set at the factory. Do not change from "01" if the projector is used alone.

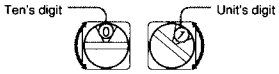

Notes

- Do not set the same device index number on multiple projectors in the same system.
- Do not set the device index number to "00." If you do, the projector will be operated only with the keys on the control panel. It cannot be controlled with the wired or wireless Remote Commander, or with an external equipment via the PJ COM connector.

Notes on setting of the index number

- **Set the same group index number for all equipment of the same system connection (those on the signal route between the signal source and the projector).**

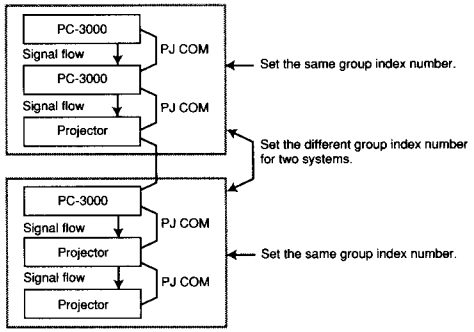

- **Set the correct group and device index numbers and the switcher number.**
  Do not set the same device index number or the same switcher number in one group.
  For example, if there are different pieces of equipment with the switcher number 1, the error message will appear when the SYS SET key is pressed.
- **Set the switcher that outputs the signal to the projector to number 1.**

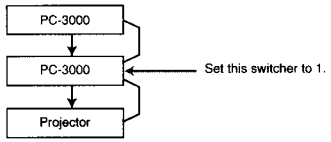

Notes on connections when two or more switchers are used

- **Mount the IFB-12/12A interface board to the slot 1 of the number (n) switcher and connect the output connector of the number (n+1) switcher to the IFB-12/12A.**
- **You can attach the IFB-12/12A signal interface board (when the IN/OUT switch is set to OUT) only to the number 1 switcher.**

Setting the Index Numbers

To select the projector by designating the index numbers

When the switchers and projectors are connected as illustrated, select the desired projector by pressing the keys on the remote commander as shown below.

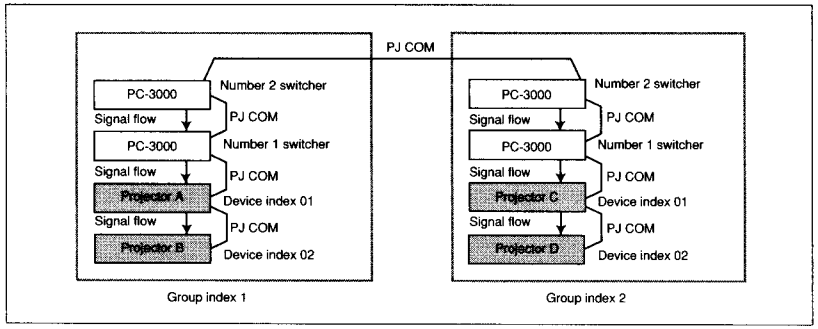

Example:

To select all the projectors
GROUP → ALL → ENTER → ALL → ENTER
Projectors A, B, C and D are selected.

To select projectors with device index 01 from all the groups
GROUP → ALL → ENTER → 1 → ENTER
Projectors A and C are selected.

To select a projector with device index 01 from group index 2
GROUP → 2 → ENTER → 1 → ENTER
Projector C is selected.

To select all the projectors from group index 2
GROUP → 2 → ENTER → ALL → ENTER
Projectors C and D are selected.

Notes

- Set the group index and device index numbers correctly. If more than two projectors are set to the same group index and device index numbers, an error message will be displayed when the SYS SET key is pressed.
- If the group index is a tens digit number, press the GROUP key before each press of the number key.

Example:

To select a projector with device index 13 of group index 12
GROUP → 1 → GROUP → 2 → ENTER → 1 → 3 → ENTER

Maintenance / Other

Troubleshooting

If the projector appears to be operating erratically, try to diagnose and correct the problem using the following guide. If the problem still persists, consult with qualified Sony personnel.

Symptom	Cause	Remedy
The power does not turn on.	The MAIN POWER switch is turned off.	Press the MAIN POWER switch on the projector *(see page 21)*.
The power turns on and immediately turns off.	There may be an internal problem.	Check the error code in the LED display window on the rear of the projector and consult with qualified personnel.
Picture does not appear.	The picture is cut off.	Press the MUTING PIC key *(see page 23)*.
	If no menu appears, external signal and/or sync is not input correctly.	Check the input signal and sync in the INPUT INFO menu and connect them correctly *(see page 41)*.
	If menu appears with no input, sync connection is not correct.	Check SYNC SEL in the INPUT SETTING menu and connect the sync correctly, if necessary *(see page 37)*.
	If no menu appears with no input, there may be an internal problem.	Consult with qualified personnel.
Picture is too dark.	Contrast is set to minimum.	Adjust the contrast with the CONTR + key *(see page 24)*.
	Clamp setting is not correct.	Change the clamp setting in the INPUT SETTING menu *(see page 36)*.
Picture is distorted.	The input signal is not selected correctly.	Select a correct signal in the INPUT A, INPUT B or INPUT C option in the SET SETTING 1 menu *(see page 38)*.
On-screen displays do not appear.	The on-screen displays are turned off.	Press the STATUS OFF key *(see page 23)*.
The projector does not operate with the remote commander.	The device index number is set to "00."	Set the DEVICE INDEX switches on the projector to a number other than "00" *(see page 52)*.
INPUT A cannot be selected.	INPUT A is in switcher mode.	Press the SYS SET key *(see page 50)*.
INPUT B cannot be selected.	The IFB-12/12A interface board installed to INPUT B is in OUT mode.	Set the IN/OUT selector on the IFB-12/12A to IN.

Specifications

Optical characteristics

Projection system
3 picture tubes, 3 lenses, horizontal inline system
Picture tube 9-inch high luminance, electromagnetic focus tubes, with coolant sealed
Projection lens HACC (High-resolution Aspherical and Color Corrected) multicoating lenses
Projected picture size
Factory-adjusted to 120 inches (diagonal measure)
Range: 90 to 300 inches (diagonal measure) adjustable
Light output ANSI lumen [1] (color temperature: 6500°K)
350 lm (fH: 150 kHz, fV: 50 Hz)
280 lm (fH: 15 kHz, fV: 60 Hz)
Peak white: 1300 lm
All white: 500 lm

Electrical characteristics

Color system NTSC, PAL, SECAM, NTSC4.43, and PAL-M switched automatically
Resolution 700 TV lines (video input)
1100 TV lines (HDTV input)
2500 × 2000 pixels (RGB input at fH: 102 kHz, fV: 50 Hz)
RGB inputs Horizontal frequency: 15 kHz to 150 kHz
Vertical frequency: 38 Hz to 150 Hz
Test signal Various test pattern generators incorporated

Input/Output

VIDEO (VPH-G90U/G90M only)
VIDEO IN: BNC type (1)
Composite video input, 1 Vp-p ± 2 dB, sync negative, 75 ohms terminated
VIDEO OUT: BNC type (1)
Loop-through output of VIDEO IN
S VIDEO (VPH-G90U/G90M only)
Y IN: BNC type (1)
Luminance signal, 1 Vp-p ± 2 dB, sync negative, 75 ohms terminated
C IN: BNC type (1)
Chrominance signal, 1 Vp-p ± 2 dB, sync negative, 75 ohms terminated
S VIDEO IN: 4-pin mini-DIN (1)
Y (luminance) signal: 1 Vp-p ± 2 dB, sync negative, 75 ohms terminated
C (luminance) signal: 0.286 Vp-p ± 2 dB, 75 ohms terminated (NTSC)
0.3 Vp-p ± 2 dB, 75 ohms terminated (PAL)
S VIDEO OUT: 4-pin mini-DIN (1)
Loop-through output of S VIDEO IN
INPUT A BNC type (5)
Analog RGB/Component:
R/R-Y: 0.7 Vp-p ± 2 dB, 75 ohms terminated, positive
G: 0.7 Vp-p ± 2 dB, 75 ohms terminated, positive
G with sync/Y: 1 Vp-p ± 2 dB, 75 ohms terminated, sync negative
B/B-Y: 0.7 Vp-p ± 2 dB, 75 ohms terminated, positive
SYNC/HD: Composite sync: 0.6–8 Vp-p high impedance, sync positive/negative
Vertical sync width: wider than horizontal scanning interval (2H)
VD:Vertical sync: 0.6–8 Vp-p high impedance, sync positive/ negative
Vertical sync width: Wider than horizontal scanning interval (2H)
HDTV Y/PB/PR:
Y: 1 Vp-p ± 2 dB, 75 ohms terminated,
Tri-level sync: ±0.3 Vp-p, Bi-level sync: 0.3 Vp-p
PB/PR: 0.35 Vp-p ± 2 dB, 75 ohms terminated
HDTV GBR:
G with sync: 1 Vp-p ± 2 dB, 75 ohms terminated,
Tri-level sync: ±0.3 Vp-p, Bi-level sync: 0.3 Vp-p
B/R: 0.7 Vp-p ± 2 dB, 75 ohms terminated
CONTROL S IN/PLUG IN POWER:
stereo minijack type (1)
5 Vp-p, plug in power, DC 5 V maximum output 60 mA
OUT: stereo minijack type (1)
loop-through output of CONTROL S IN
TRIGGER Minijack type (1)
POWER ON: DC 12 V, output impedance 4.7 kilohms
POWER OFF: 0 V
LINK IN: minijack (1)
OUT: minijack (1)
RS-232C/422A D-sub 9-pin type (1)
PJ COM D-sub 9-pin type (2)

General

Dimensions 750 × 385.5 × 1,066 mm (29 17/32 × 15 3/16 × 41 31/32 inches) (w/h/d)
Mass Approx. 110 kg (242 lb 8 oz)
Power requirements
VPH-G90U: AC 120 V; 9 A, 50/60 Hz
VPH-G90E/G90M: AC 220-240 V; 5 A, 50/60 Hz
Power consumption
VPH-G90U: Max. 1,050 W (Standby mode: 14 W)
VPH-G90E/G90M: Max. 1,000 W (Standby mode: 14 W)
Operating temperature
0°C to 40°C (32°F to 104°F)
Operating humidity
35% to 85% (no condensation)
Storage temperature
–20°C to 60°C (–4°F to 140°F)
Storage humidity 10% to 90%
Supplied Accessories
Remote control RM-PJ1001 (1)
R6 (size AA) batteries (3)
Remote control cable (15 m (49.5 feet) long) (1)
AC Power cord (1)
Lens cap (3)
PJ COM terminator (1)
Operating Instructions (1)
Acquired safety regulations
VPH-G90U:
UL1950, CSA No.950
FCC Class A, IC Class A
DHHS, DNHW
VPH-G90E/G90M:
TÜV (EN60950), PTB
CE-Marking, C-Tick Mark

Optional accessories

Signal Interface Switcher PC-3000
Signal Interface Unit IFU-1271/1271M
Projector Suspension Support PSS-90
Interface Board IFB-12/12A/20/21/40/50/1000/G90E
Signal Interface Cable
SIC-10/20A/20B/20C/21/22/23/24/24A/24B/25/26/26A
HD D-sub 15-pin to 5 BNC cable SMF-400
HD D-sub 15-pin to HD D-sub 15-pin cable SMF-401
9-pin remote cable for RS-232C/422A
RCC-5G/10G/30G
Screen VPS-100FH (100" flat)
VPS-120FH (120" flat)
VPS-100FM (100" flat, powered)
VPS-120FM (120" flat, powered)

Some items may not be available in certain areas. For details, please consult your nearest Sony office.

1) ANSI lumen is a measuring method of American National Standard IT 7.215.

Specifications

Pin assignment

RS-232C/422A connector (D-sub 9-pin, female)

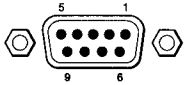

Pin No.	Signal	
1	GND	Ground
2	$\overline{TX}$	Receive
3	RX	Transmit
4	GND	Ground
5	Not used	
6	GND	Ground
7	TX	Receive
8	$\overline{RX}$	Transmit
9	GND	Ground

PJ COM connector (D-sub 9-pin, female)

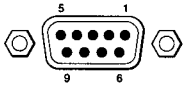

Pin No.	Signal	
1	GND	Ground
2	$\overline{BUS\ BUSY}$	Busy
3	TX/RX	Receive/Transmit
4	GND	Ground
5	Not used	
6	GND	Ground
7	BUS BUSY	Busy
8	TX/RX	Receive/Transmit
9	GND	Ground

S VIDEO connector (mini-DIN 4-pin) (VPH-G90U/G90M only)

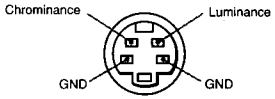

Design and specifications are subject to change without notice.

Index

A

Adjusters 13
Adjusting
- the blanking 28
- the centering 25
- the picture 24
- the size/shift of the picture 27

B

Battery
- installation 20
- notes 20

Blanking adjustment 28

C

Carrying the projector 14
Clamp setting 36
Connecting
- remote commander to the projector 20
- directly to the projector 46
- multiple projectors 47
- using the PC-3000 Signal Interface Switcher 49

Control panel
- location and function of controls 17

Cutting off the picture 23

D, E, F

Device index number 40, 52
Dynamic picture 34
DRC (Digital Reality Creation) 35

G

Group index number 40, 52

H

Handles 14

I, J, K, L

Index 40, 52
Initialization screen 22
Input signal selection 22
Installation
- ceiling installation 45
- diagrams 44, 45
- floor installation 44

M

Menu
- INPUT INFO menu 41
- INPUT SETTING menu 36
- Operation 29
- Modes 30
- PIC CTRL menu 32
- PIC SETTING 1 menu 34
- PIC SETTING 2 menu 35
- SET INFO menu 42
- SET SETTING 1 menu 38
- SET SETTING 2 menu 39

N

Notes
- for wireless remote control operation 20
- on batteries 20

O

Optional accessories 57

P, Q

Pin assignment 58
Precautions 8
Pro-user mode 31
Projecting the picture 21

R

Remote commander
- location and function of controls 17
- notes 20

Resetting
- picture settings to the initial preset levels 24
- the size/shift to the initial preset levels 27, 28

S

Supplied accessories 57
Supplied tool 13

T

Turning off the on-screen display 23

U

User mode 30

V

Video memory 32

W

Warming up screen 22

SONY

3-865-264-11 (2)

Multiscan Projector

Installation Manual for Dealers

VPH-G90E
VPH-G90M
VPH-G90U

©1998 by Sony Corporation

Table of Contents

Installation

Installation Procedures **5**
Before Installation **6**
Using the Handles to Carry the Projector 6
Necessary Clearance for Installation and Maintenance 7
Notes on Screen 10
Installation Diagrams **12**
Floor Installation Using Front Projection Flat Screen 12
Ceiling Installation Using Front Projection Flat Screen 14
Floor Installation Using Rear Projection Flat Screen 16
Modifying Parts **18**
Opening the Upper Cover 18
Using the Adjusters 19
Changing the Polarity 20
Adjusting the CRT Conversion Angle 22

Connections

Location and Function of the Rear Panel **24**
Switching the 75-ohm Terminate Connectors (VPH-G90M/G90U only) **27**
Connecting Directly to the Projector **29**
Connecting Multiple Projectors **30**
Using the PC-3000 Signal Interface Switcher **32**
Confirming the System Construction 37
Using the PC-1271/1271M Signal Interface Switcher ... **38**

Before Adjustment

For Remote Control **42**
Preparation of the Remote Commander 42
Keys on the Remote Commander 46
Using the MENU **50**
Basic Menu Operation 50
Menu Modes 51
The PIC CTRL (Picture Control) Menu 55
The PIC SETTING 1 (Picture Setting 1) Menu 57
The PIC SETTING 2 (Picture Setting 2) Menu 58
The INPUT SETTING Menu 59
The SET SETTING 1 Menu 62
The SET SETTING 2 Menu 63
The INPUT INFO (Information) Menu 65
The INPUT MEM. (memory) OPTION Menu 66
The SET INFO (information) Menu 68
The SERVICE SETTING 1 Menu 68
The SERVICE SETTING 2 Menu 69
The SERVICE SETTING 3 Menu 70
The PIC ORBITING Menu 71
The INT. OSC (internal oscillation) SETTING Menu 72
The TIMER Menu 73
The ABL (Automatic Brightness Limiter) LINK Menu 74
Test Patterns **75**
Test Patterns 75
Test Patterns in Each Mode 76
Warm-up before adjustment **77**

Adjustments

Adjustment Procedure **78**
Adjusting the Lens Focus and Scheimpflug **81**
Preparation 81
Adjusting the Green Lens Focus and Scheimpflug 81
Adjusting the Red Lens Focus and Scheimpflug 85
Adjusting the Blue Lens Focus and Scheimpflug 86
Adjusting the Magnetic Focus **87**
Saving the Standard Magnetic Focus Data 92
Adjusting the Registration **93**
Preparation 93
Keys for Adjusting 94
Adjusting the Green Registration 95
Adjusting the Red Registration 108
Adjusting the Blue Registration 119
Saving the Standard Registration Data 121
Fine Adjustment for Each Input Signal **122**
Selecting the Input Signal 122
Fine Magnetic Focus and AQP/DQP Adjustments 122
Fine Registration Adjustment 122
SIZE Adjustment 123
SHIFT Adjustment 123
Blanking Adjustment 124
Adjusting the White Balance 125
Adjusting the Picture Quality **129**

(continued)

Table of contens

Saving the Adjustment Data **130**
Memory Blocks 130
Saving the Data to the Service Block 132
Input Memory 133
Video Memory 137
Resetting the Data **138**
Resetting the Item in Adjustment Only (Normal Reset) 138
Resetting Multiple Items Simultaneously (All Data Reset) 139

Others

Setting the Index Numbers **141**
Link Functions **145**
Using the Linked ABL Function 145
Self-diagnosis Function **148**
List of the Projection Distance by Angle of Optical Axis **150**

Index **156**

Installation

Installation Procedures

By default, this projector is adjusted for 120-inch front projection on the floor/desk. If you install the projector in other conditions, you have to change some settings. Therefore, installation procedures depend on the screen size or type, and installation method.

① Verify the conditions of installation, such as angle of optical axis, projection distance, height of the projector and screen.
↓
② Change the polarity according to the projection patterns. *(page 20)*
↓
③ Install the projector and screen. *(page 12)*
↓
④ Adjust the lens focus approximately. *(page 81)*
↓
⑤ Reset the registration data to the factory setting. *(page 138)*
↓
⑥ Adjust the CRT conversion angle. *(page 22)*
↓
⑦ Connect external video equipment. *(page 27)*
↓
The installation is completed.
Perform the adjustments following the adjustment procedure. (page 78)

Before Installation

Using the Handles to Carry the Projector

Carry the projector **with four persons or more** by using the front, rear and side (right and left) handles.

Using the handles

Pull out the front and rear handles or the side handles.

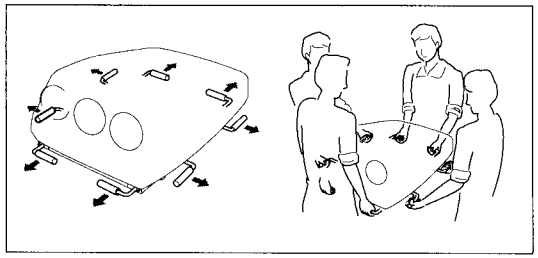

Putting away the handles

Push the handle release lever under each handle. The handle is automatically retracted.

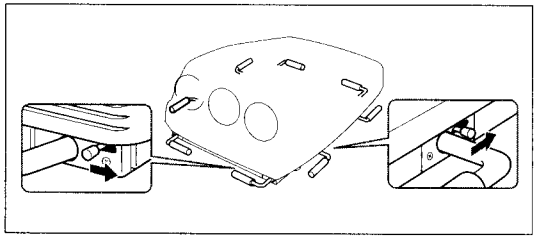

Necessary Clearance for Installation and Maintenance

Make sure to provide enough room for maintenance service. Install the projector, making reference to the dimensions below.

Note

There should be a space of at least 30 cm (1 3/16 inches) around the ventilation holes at the rear. Never block the holes with any material.

Front

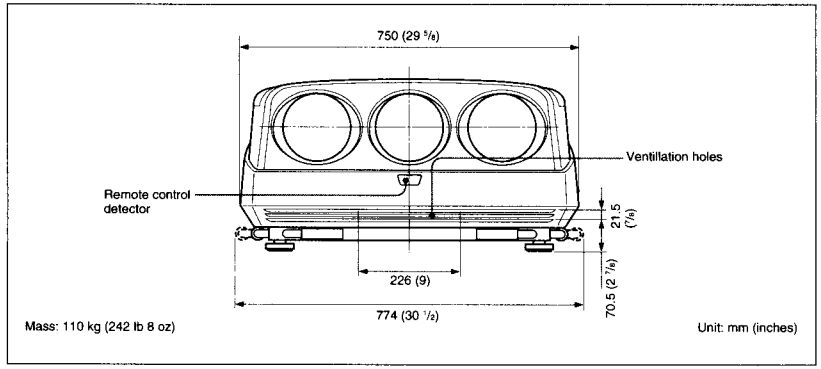

Rear

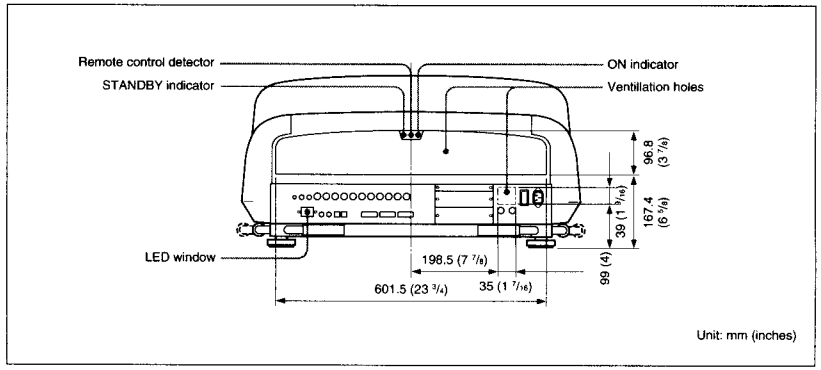

Before Installation

Bottom

The standard hole for installation on the bottom surface is useful for reference when measuring for installation. There are seven holes on the bottom surface of the projector. For ceiling installation using the optional PSS-90 Projector Suspension Support, use five holes to attach the PSS-90. The other two holes are spare ones.

Notes

- Use only the M8 meter screws of 10 mm (13/32 inches) to 30 mm (1 3/16 inches) long for the attachment holes for the PSS-90.
- When attaching the PSS-90, use the M8 meter screws of 20 mm (25/32 inches) supplied with the PSS-90.

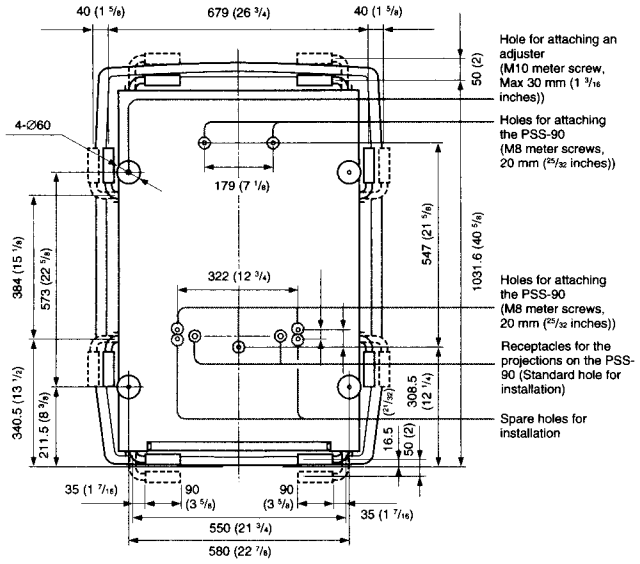

Side

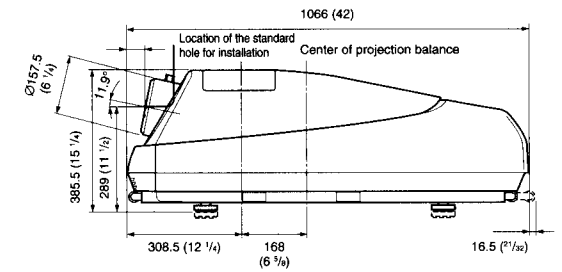

With the covers open

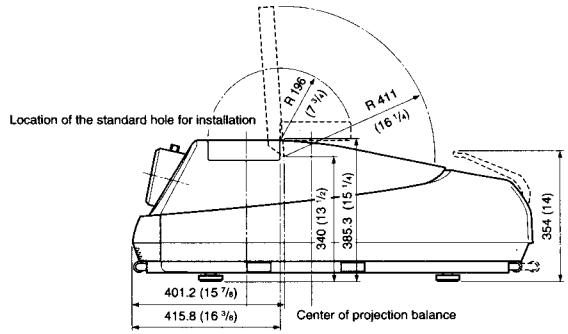

Notes on Screen

Screen size

The screen size is the diagonal length of the screen in inches, while the aspect ratio of the screen is 4:3. The ratio of the screen height, width, and diagonal is 3:4:5.

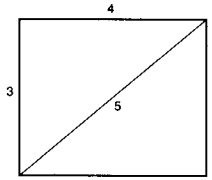

If you use a screen with 4:3 aspect ratio whose size is not given in the table below, you can calculate the screen height and width from the screen size (inches) as follows.
Calculate at the conversion rate of 25.4 mm to the inch.

Height (mm) = Screen size × 25.4 × $^3/_5$
Width (mm) = Screen size × 25.4 × $^4/_5$

Screen size and dimensions

Screen size (inches) (Diagonal)	Height (mm)	Width (mm)
90	1372	1829
100	1524	2032
120	1829	2438
150	2286	3048
180	2743	3658
200	3048	4064
250	3810	5080
300	4572	6096

Screens with an aspect ratio other than 4:3

When the height is greater

Calculate the screen size with 4:3 aspect ratio from the screen height as shown below. Install the projector and screen in accordance with the screen size obtained.

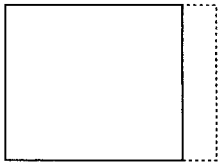

--- : Screen whose aspect ratio is 4:3

Screen size (inch) = (height (mm) × $^5/_3$) × $^1/_{25.4}$

Example: When the screen height is 1500 mm
(1500 (mm) × $^5/_3$) × $^1/_{25.4}$ = Approx. 98 inches

When the width is greater

Calculate the screen size with 4:3 aspect ratio from the screen width as shown below. Install the projector and screen in accordance with the screen size obtained.

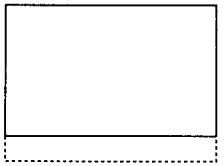

---: Screen whose aspect ratio is 4:3

Screen size (inch) = (width (mm) × $^5/_4$) × $^1/_{25.4}$

Example: When the screen width is 2000 mm
(2000 (mm) × $^5/_4$) × $^1/_{25.4}$ = Approx. 98 inches

Types of screen

Front projection screen for floor installation

The bead screen is recommended. A screen of this type reflects the brightest light.

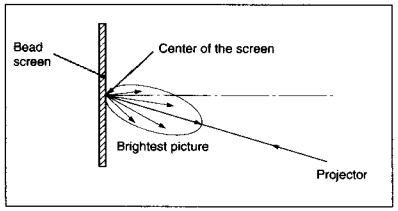

Front projection screen for ceiling installation

The silver screen is recommended. You can get a picture that is two to four times brighter than that of the white screens.

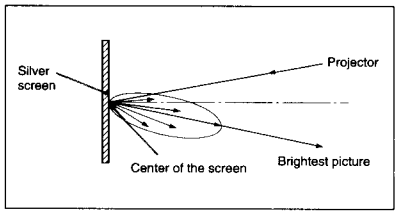

Rear projection screen

A screen manufactured using two sheets, the fresnel and lenticular, is recommended for a bright and clear full-screen picture projection.

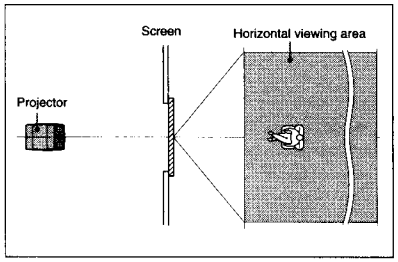

White screen

When viewers watch the projected picture in a wide area, you can obtain a picture that appears equally bright from all parts of the room using the white screen for both floor and ceiling installations. Note that you will not be able to get a clear picture in this case unless the room is dark.

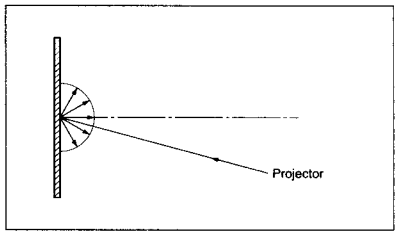

Installation Diagrams

Floor Installation Using Front Projection Flat Screen

Be sure that the projector is level to the floor.

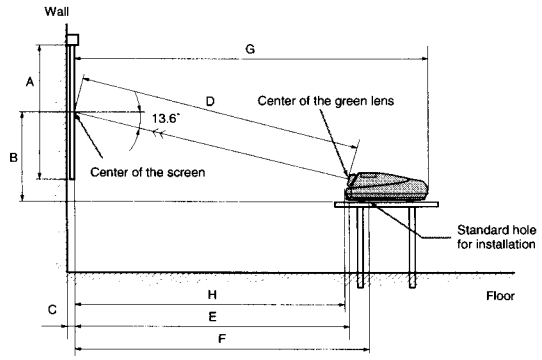

B: Difference in height between the projector's bottom surface and the center of the screen
E: Horizontal distance between the center of the screen and the center of the green lens
F: Horizontal distance between the center of the screen and the standard hole for installation
H: Horizontal distance between the center of the screen and the projector's front surface

Tolerances
B: ±5%
Other measurements: 0% to +5%

The distances in gray are the factory preset settings. Unit:mm (inches)

Screen size (inches)	90	100	120	150	180	200	250	300
A (Vsize)	1372 (54 1/8)	1524 (60)	1829 (72 1/8)	2286 (90)	2743 (108)	3048 (120)	3810 (150)	4572 (180)
B (Hcent)	889 (35)	950 (37 1/2)	1074 (42 3/8)	1288 (50 3/4)	1488 (58 5/8)	1621 (63 7/8)	1942 (76 1/2)	2287 (90 1/8)
C (Width)			28[a] (1 1/16)	32[b] (1 5/16)				
D (TD)	2587 (101 7/8)	2847 (112 1/8)	3373 (132 7/8)	4285 (168 3/4)	5137 (202 1/4)	5702 (224 1/2)	7065 (278 1/4)	8533 (336)
E (Xlens)	2514 (99)	2767 (109)	3278 (129 1/8)	4165 (164)	4993 (196 5/8)	5542 (218 1/4)	6867 (270 3/8)	8294 (326 5/8)
F (Lhole)	2795 (110 1/8)	3048 (120)	3559 (140 1/8)	4445 (175)	5273 (207 5/8)	5823 (229 3/8)	7147 (281 1/2)	8574 (337 5/8)
G (Lmax)	3520 (138 5/8)	3773 (148 5/8)	4284 (168 3/4)	5171 (203 5/8)	5999 (236 1/4)	6548 (257 7/8)	7873 (310)	9300 (366 1/4)
H (Lfront)	2437 (96)	2690 (106)	3201 (126 1/4)	4088 (161)	4916 (193 5/8)	5465 (215 1/4)	6790 (267 3/8)	8217 (323 5/8)

a) Sony VPS-100FM
b) Sony VPS-120FH and VPS-120FM

When the Screen Size is not Mentioned in the Tables

You can calculate the installation measurements described below when you use the screen whose size is not mentioned in the tables on pages 12 and 14.

Check your installation conditions:
- Screen size to be used (S)
- Installation measurements at the end of the manual, ES and BS for smaller screen size and EL and BL for larger screen size
  See the tables on pages 150 to 155.

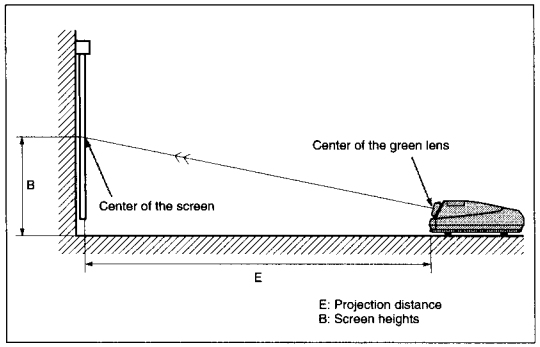

Now you can calculate the installation measurements as follows:
E (mm) = ES + ((S – smaller screen size) × (EL – ES) × 0.1)
B (mm) = BS + ((S – smaller screen size) × (BL – BS) × 0.1) + 289

Example: when using 124-inch screen

According to the tables on page 151, the values E and B are as follows:
ES = 3279, BS = 791 (As the smaller screen size is 120 inch.)
EL = 3570, BL = 861 (As the smaller screen size is 130 inch.)
Therefore,
E (mm) = 3279 + ((124 –120) × (3570 – 3279) × 0.1) = 3395.4 (mm)
B (mm) = 791 + ((124 – 120) × (861 – 791) × 0.1) + 289 = 1108 (mm)

Installation Diagrams

Ceiling Installation Using Front Projection Flat Screen

Use the PSS-90 Projector Suspension Support (not supplied).

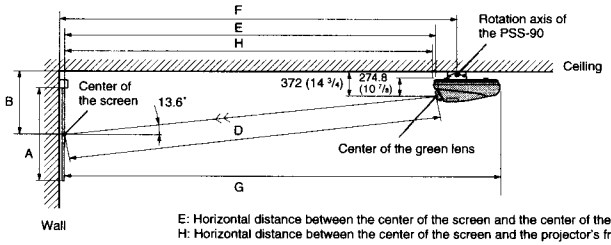

E: Horizontal distance between the center of the screen and the center of the green lens
H: Horizontal distance between the center of the screen and the projector's front surface

Tolerances
B: ±5%
Other measurements: 0% to +5%

Unit:mm (inches)

Screen size (inches)	90	100	120	150	180	200	250	300
A (Vsize)	1372 (54 1/8)	1524 (60)	1829 (72 1/8)	2286 (90)	2743 (108)	3048 (120)	3810 (150)	4572 (180)
B (Hcent)	985 (38 7/8)	1046 (41 1/4)	1170 (46 1/8)	1384 (54 1/2)	1584 (62 3/8)	1717 (67 5/8)	2038 (80 1/4)	2383 (93 7/8)
D (TD)	2587 (101 7/8)	2847 (112 1/8)	3373 (132 7/8)	4285 (168 3/4)	5137 (202 1/4)	5702 (224 1/2)	7065 (278 1/4)	8533 (336)
E (Xlens)	2514 (99)	2767 (109)	3278 (129 1/8)	4165 (164)	4993 (196 5/8)	5542 (218 1/4)	6867 (270 3/8)	8294 (326 5/8)
F (Lhole)	2932 (115 1/2)	3185 (125 1/2)	3696 (145 5/8)	4310 (169 3/4)	5138 (202 3/8)	5687 (224)	7012 (276 1/8)	8439 (332 1/4)
G (Lmax)	3520 (138 5/8)	3773 (148 5/8)	4284 (168 3/4)	5171 (203 5/8)	5999 (236 1/4)	6548 (257 7/8)	7873 (310)	9300 (366 1/4)
H (Lfront)	2437 (96)	2690 (106)	3201 (126 1/8)	4088 (161)	4916 (193 5/8)	5465 (215 1/4)	6790 (267 3/8)	8217 (323 5/8)

Necessary parts modifications

Changing the polarity used for "Ceiling installation, front projection"
For details, see "Changing the Polarity" on page 20.

Attaching the PSS-90 Projector Suspension Support

Attach the projector mounting bracket to the bottom surface of the projector.
Use five each of the M8×20 bolts, M8 washers and spring washers, all of which are supplied with the PSS-90.

1 Align the two projections on the projector mounting bracket with the receptacles on the bottom surface of the projector.

2 Fasten the five bolts and washers to fix the mounting bracket to the five holes for attaching the PSS-90 on the bottom surface of the projector.

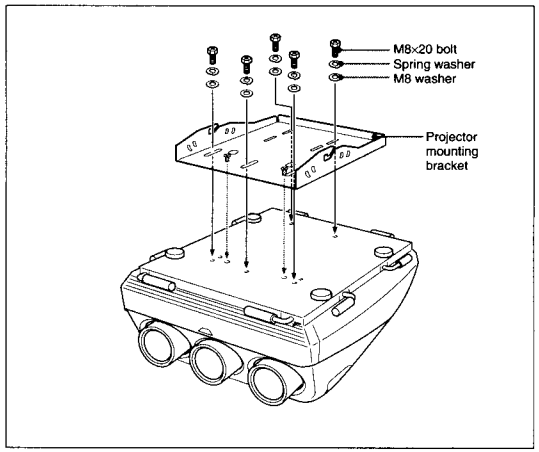

For attaching the PSS-90 to the ceiling, refer to the Installation Manual of the PSS-90 Projector Suspension Support.

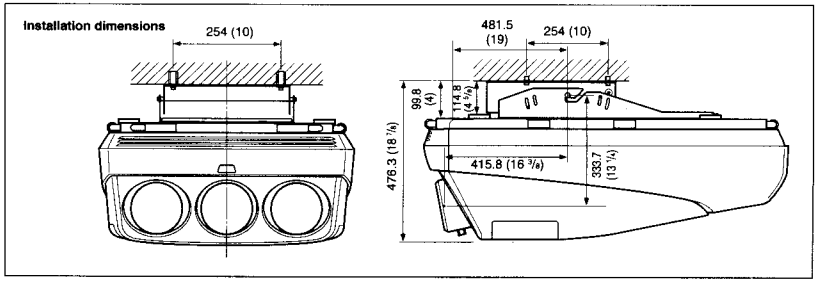

Installation Diagrams

Floor Installation Using Rear Projection Flat Screen

What is the optical axis angle?

The optical axis angle is the angle between the horizontal level line and the straight line from the center of the projector's green lens to the center of the screen. When using a rear projection screen, you can get the brightest picture when the center of the screen is aligned with a straight line extension of the center of the green lens.
Therefore, the most suitable optical axis angle varies depending on the height of the screen and your line of sight.

When the optical axis angle is 2°

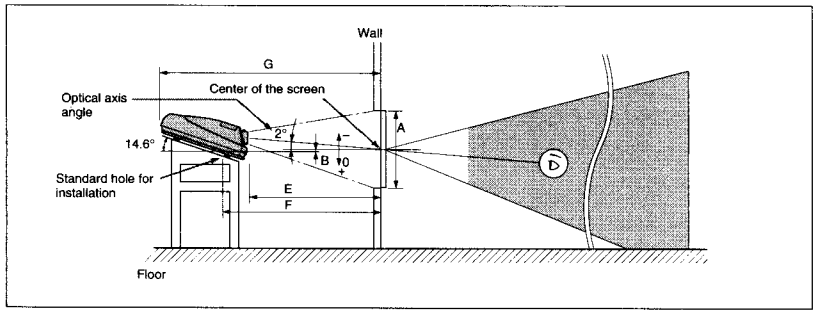

Unit: mm (inches)

Screen size (inches)	90	100	120	150	180	200	250	300
A (Vsize)	1372 (54 1/8)	1524 (60)	1829 (72 1/8)	2286 (90)	2743 (108)	3048 (120)	3810 (150)	4572 (180)
B (Hcent)	95 (3 3/4)	86 (3 1/2)	67 (2 3/4)	36 (1 7/16)	6 (1/4)	−13 (− 17/32)	−60 (−2 3/8)	−111 (−4 3/8)
E (Xlens)	2567 (101 1/8)	2826 (111 3/8)	3348 (131 7/8)	4252 (167 1/2)	5097 (200 3/4)	5659 (222 7/8)	7011 (276 1/8)	8467 (333 3/8)
F (Lhole)	2873 (113 1/8)	3132 (123 3/8)	3653 (143 7/8)	4558 (179 1/2)	5402 (212 3/4)	5964 (234 7/8)	7316 (288 1/8)	8772 (345 3/8)
G (Lmax)	3594 (141 1/2)	3853 (151 3/4)	4375 (172 1/4)	5279 (207 7/8)	6124 (241 1/8)	6686 (263 1/4)	8038 (316 1/2)	9494 (373 7/8)

Necessary parts modifications

Changing the polarity used for "Floor installation, rear projection"
For details, see "Changing the Polarity" on page 20.

Variable Range of the Optical Axis Angle in Rear Projection

You can change the optical axis angle within the following ranges by adjusting the scheimpflug.
For adjusting the scheimpflug, see page 81.

On floor installation

You can install the projector within an angle of optical axis −13.6° to +2°.

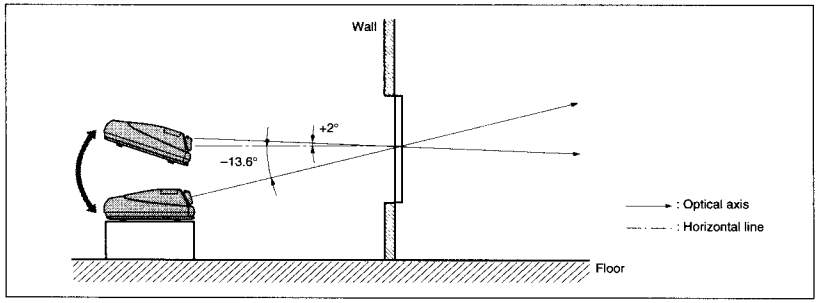

On ceiling installation

You can install the projector within an angle of optical axis +3° to +13.6°.

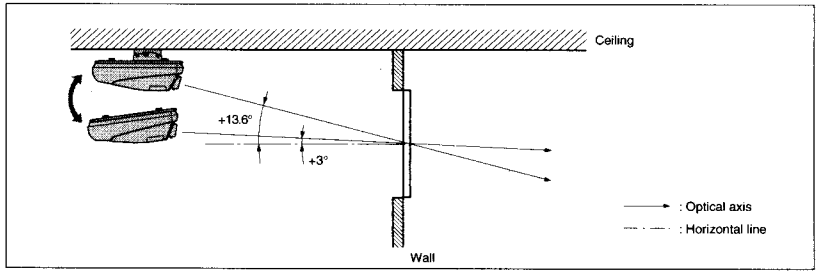

Modifying Parts

Opening the Upper Cover

Most modifications can be performed only by opening the upper cover.

1 Turn off the main power of the projector.

2 Unlock the two screws on the projector by using a screwdriver, and then open the upper cover.

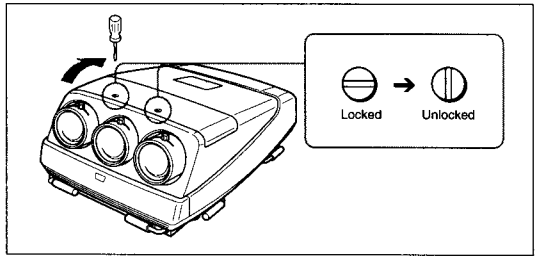

To remove the supplied tool

The tool is located on the back of the upper cover.
Loosen the screw by using a screwdriver and remove the tool.

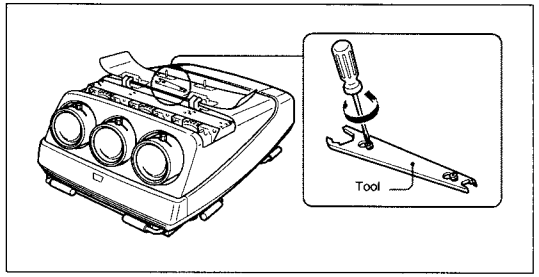

Using the Adjusters

When the projector installation location is not horizontal, adjust the adjusters so that the projector is placed horizontally.
Use the supplied tool to turn the adjuster.

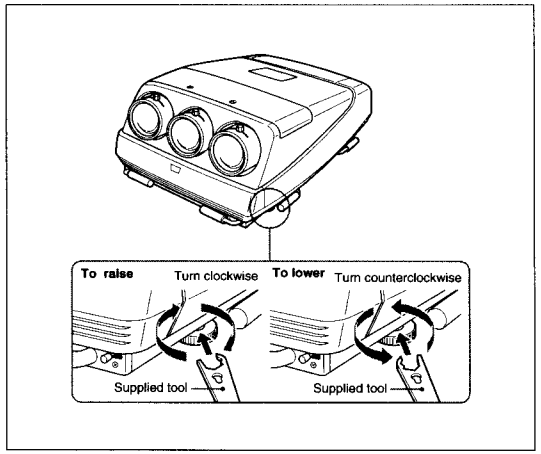

Note

The supplied tool can rotate the screw in one direction only. To rotate the screw in the reverse direction, turn the tool upside down.

Caution

Do not turn the tool forcibly when the screw has fully rotated. Otherwise, the tool may slip out and injure your hand.

Modifying Parts

Changing the Polarity

The polarity of the projector is adjusted at the factory to use the projector for front projection on the floor.
When the projector is installed on the ceiling or used in rear projection, it is necessary to change the settings of the polarity switches.

How to change the polarity

1 Turn off the power of the projector.

2 Open the control panel cover, loosen the screw, and open the cover of the polarity switches.

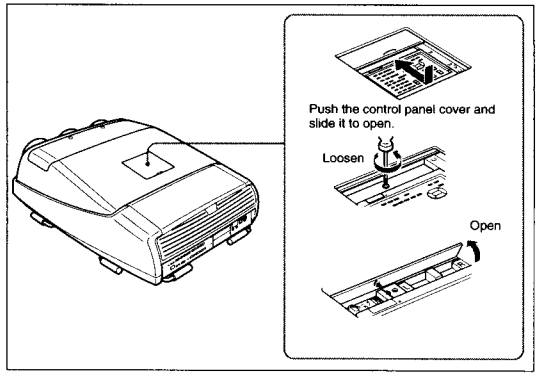

3 Change the position of the polarity switches (V and H switches), if necessary.

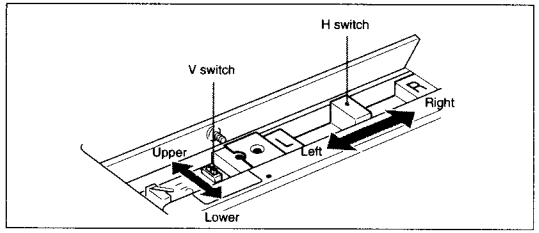

4 Close the cover of the polarity switches, tighten the screw and close the control cover.

Note

If the cover of the polarity switches does not shut firmly, the power of the projector is not turned on in order to protect the CRTs.

Installation methods and settings of the polarity switches

Installation methods	Position of the V switch	Position of the H switch	On-screen display by default (See below.)
Front projection, floor	Upper	Left	Correct
Front projection, ceiling	Lower	Right	C
Rear projection, floor	Upper	Right	A
Rear projection, ceiling	Lower	Left	B
Others	Display letters on the screen so that you can determine which changes to make. *For on-screen display and necessary changes, see below.*		

Polarity and on-screen display

When the projector is installed on the ceiling or used in rear projection without changing the polarity, one of the following on-screen displays appears. In this case, you have to change the polarity corresponding to the installation methods.

A The letters are backward.

Change the position of the H switch.

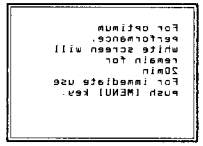

B The letters are upside down.

Change the position of the V switch.

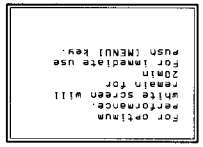

C The letters are upside down and backward.

Change the positions of the H and V switches.

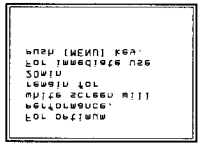

Adjusting the CRT Conversion Angle

Adjust the CRT conversion angle so that the three CRT images converge exactly.

1 Open the upper cover.
For details, see "Opening the Upper Cover" on page 18.

2 Turn on the power of the projector.

3 Set the remote commander to the service mode.
For details, see "Preparation of the Remote Commander" on page 43.

4 Reset the green, red and blue centering.
For details, see "Resetting the Data" on page 138.

5 Make sure that the on-screen display is shown as follows:
- The center of the green hatch pattern aligns with the horizontal center of the screen.
- The center of the red and blue hatch patterns align at even intervals from the green hatch pattern.

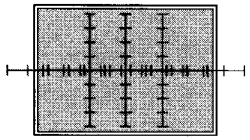

If the center of the green hatch pattern does not align with the center of the screen, re-install the projector correctly.

6 Loosen the two red CRT fixing screws (black) by using a Philips-head screwdriver. Make sure not to remove the screws.

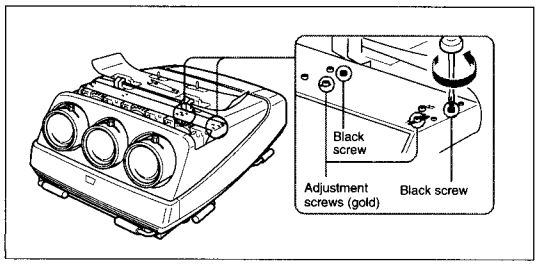

7 Insert the two adjustment screws (gold) into the appropriate adjustment holes corresponding to the screen size.

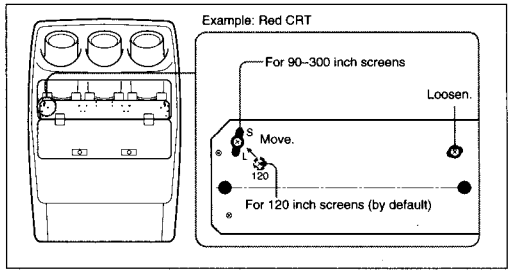

By default, the two adjustment screws (gold) are fixed to the two adjustment holes for 120 inch screens.
For 90 and 300 inch screens other than 120 inch ones, remove the adjustment screw from the 120 inch hole and insert it into the elliptic hole for 90–300 inch screens. Then, loosen the other adjustment screw.

8 For screens other than 120 inch screens, move the red CRT right and left so that the vertical line of the red cross hatch pattern converges with the green pattern, then tighten the two adjustment screws (gold).

Caution
When moving the CRT, do not insert your hands into the small opening between the lenses. Doing so may injure your hand.

9 Tighten the two red CRT fixing screws (black).

10 Repeat steps **6** to **9** to loosen the two blue CRT fixing screws (black), adjust the blue CRT conversion angle and tighten the two adjustment screws (gold).

Connections

Location and Function of the Rear Panel

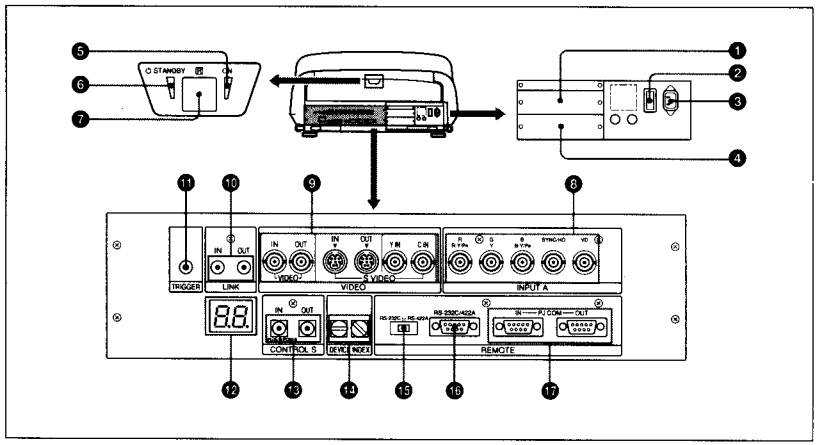

❶ Signal interface board attachment part (INPUT B)
An optional signal interface board such as IFB-12/12A and IFB-40 can be attached to this section.
When the IFB-12/12A is attached, the signal input to the INPUT A connectors can be output from the IFB-12/12A by setting it to output mode.

❷ MAIN POWER switch

❸ AC IN socket
Connect the supplied AC power cord.

❹ Signal interface board attachment part (INPUT C)
An optional signal interface board can be attached to this section.

Notes
- The IFB-40 cannot be attached to INPUT C.
- When the IFB-12/12A is attached, the IFB-12/12A cannot be set to output mode.

❺ ON indicator
When the projector is turned on, this indicator lights in green.

❻ ⏻ STANDBY indicator
When the MAIN POWER switch on the projector is turned ON, this indicator lights in orange, indicating that the projector can be turned on/off using the remote commander.

❼ Rear remote control detector

❽ INPUT A connectors (BNC type)
R/R-Y/PR, G/Y, B/B-Y/PB, SYNC/HD, VD connectors: Connect to the outputs of a computer or a video camera. According to the connected equipment, the RGB (R, G, B), component (R-Y, Y, B-Y) or HDTV (PR, Y, PB) signal is selected.

❾ VIDEO connectors*
VIDEO IN connector (BNC type): Connects to the composite video output of the video equipment.
VIDEO OUT connector (BNC type): Connects to the composite video input of a color monitor.
S VIDEO IN/OUT connectors (4-pin, mini-DIN type): Connects to the S video output or input of the video equipment.
Y IN, C IN connectors (BNC type): Connects to the Y and C video outputs of the video equipment.

Note
The S VIDEO IN connector is disconnected when a cable is connected to the Y IN/C IN connectors.

*** Note on the VPH-G90E model**
The optional IFB-G90E Video Interface Board is required for using the VIDEO connectors.

❿ LINK IN/OUT jacks (stereo minijack)
When connecting multiple projectors, connect the LINK OUT jack to the LINK IN jack on another projector. Then the ABL LINK function can be used.
For details of the link function, see page 146.

⓫ TRIGGER connector (minijack)
When the projector is turned on, 12 V is output. When it is turned off, 0 V is output. However, the connector cannot be used as the power source.

⓬ LED display window
Self-diagnosis results and PJ COM communication conditions, etc. are displayed using two-digit numbers and alphabets.
Self-diagnosis codes are displayed in red or orange, and the warning and communication conditions in green.
For details, see "Self-diagnosis functions" on page 148.

⓭ CONTROL S jacks
IN/PLUG IN POWER jack (stereo minijack): Connects to the CONTROL S OUT jack of other Sony equipment. Also connects to the CONTROL S OUT jack of the supplied remote commander with the supplied remote control cable (stereo cable) to be used as a wired remote control. In this case, this jack supplies the power to the remote commander to save the battery power.
OUT jack (stereo minijack): Connects to the CONTROL S IN jack of other Sony equipment.

Note
When using this jack, the remote control detector on the projector does not function.

Location and Function of the Rear Panel

⑭ DEVICE INDEX. switches
When multiple projectors are connected, set the device index number of each projector.
To display the device index number on the screen, press the NORMAL key, and the ENTER key on the remote commander .

> **Note**
> Do not set the device index number to "00." If you do, the projector will not operate with the remote commander.
> You can operate the projector with the keys on the control panel of the projector but the connected equipment cannot be operated with the keys on the control panel.

⑮ RS-232C/RS-422A selector
Selects the function of the RS-232C/RS-422A connector.

⑯ RS-232C/422A REMOTE connector (D-sub 9-pin)
Used to expand the system connections using the RS-232C/422A interface.

⑰ PJ COM (projector communication) IN/OUT connectors (D-sub 9-pin)
These are the connectors conforming to the RS-485 standards, especially designed to expand the system using Sony projectors.
Use these connectors to connect the PJ COM system of the PC-3000 Signal Interface Switcher.
When the cable is connected to the IN connector only, attach the supplied terminator to the OUT connector.
To connect multiple projectors, connect the IN connector to the OUT connector of another projector in cascade, and attach the supplied terminator to the OUT connector of the last projector.
For details on the specifications of the connector, refer to the Protocol Manual prepared by Sony.

About the keys on the control panel

The control panel is located inside the cover on the top of the projector. The locations and functions of the keys on the control panel are the same as those on the remote commander.
For the keys on the remote commander, see page 46.

The keys on the control panel are basically effective for this projector only. Only the commands from the SYS SET key and the switcher select commands are transmitted to the connected equipment via the PJ COM connector.

> **Note**
> If you set the device index number to "00," the commands from the SYS SET key and the switcher select commands will not be transmitted to the other equipment. Do not set the device index number to "00."

Switching the 75-ohm Terminate Connectors (VPH-G90M/G90U only)

Depending on the connections of the computer and color monitor to the projector, it may be necessary to switch the 75-ohm terminate connectors on the BA board at the rear of the projector.

1 Loosen the ten screws at the rear of the projector to remove the connector panel.

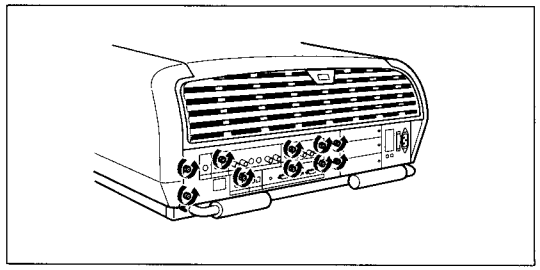

2 Disconnect the CN351 connector from the BA board.

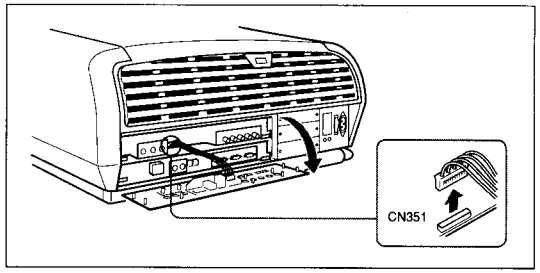

(continued)

Switching the 75-ohm Terminate Connectors

3 Open the card pullers and pull out the BA and BB boards carefully. Be careful not to pull the wires.

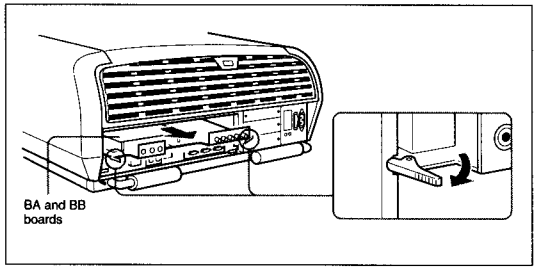

4 Switch the CN347, CN348 and CN349 connectors on the BA board.
75 Ω (pin position 3) is selected at the factory.
Set to OPEN (pin position 1) when the input signal is distributed into other equipment using a branch connector and is terminated at 75 ohms on that equipment.

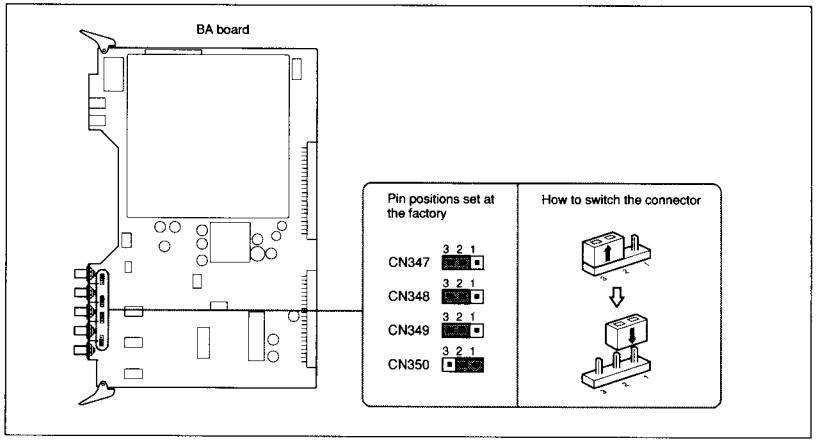

Note

The pin position of the CN350 connector is set at the factory as illustrated. Do not change the setting.

5 Perform the steps **1** to **3** above in the reverse order to replace the BA and BB boards.

Connecting Directly to the Projector

This is an example to connect pieces of video equipment directly to a single projector.
Use the IFU-1271/1271M Signal Interface Unit.

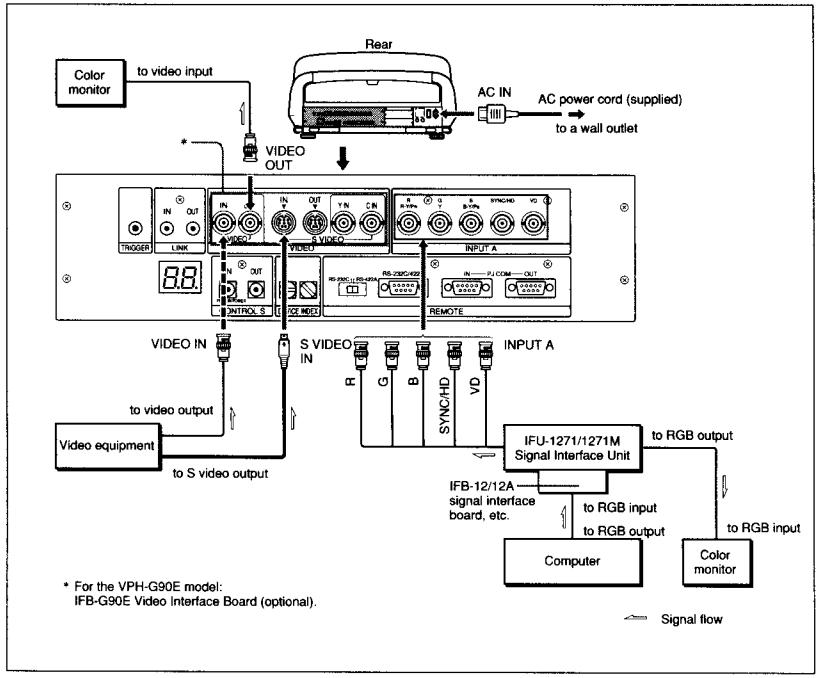

Setting up

- Set INPUT A in the SET SETTING 1 menu *(page 62)* to RGB.
- Select VIDEO or S VIDEO by pressing the INPUT SELECT keys on the remote commander.
- Switch the 75-ohm terminate connectors on the BA board according to the connections of the computer and color monitor.
  For details, see "Switching the 75-ohm Terminate Connectors" on page 27.

Connecting Multiple Projectors

This is an example to connect multiple projectors directly using the PJ COM interface.
Install the optional IFB-12/12A Signal Interface Board to the INPUT B section of the projector.

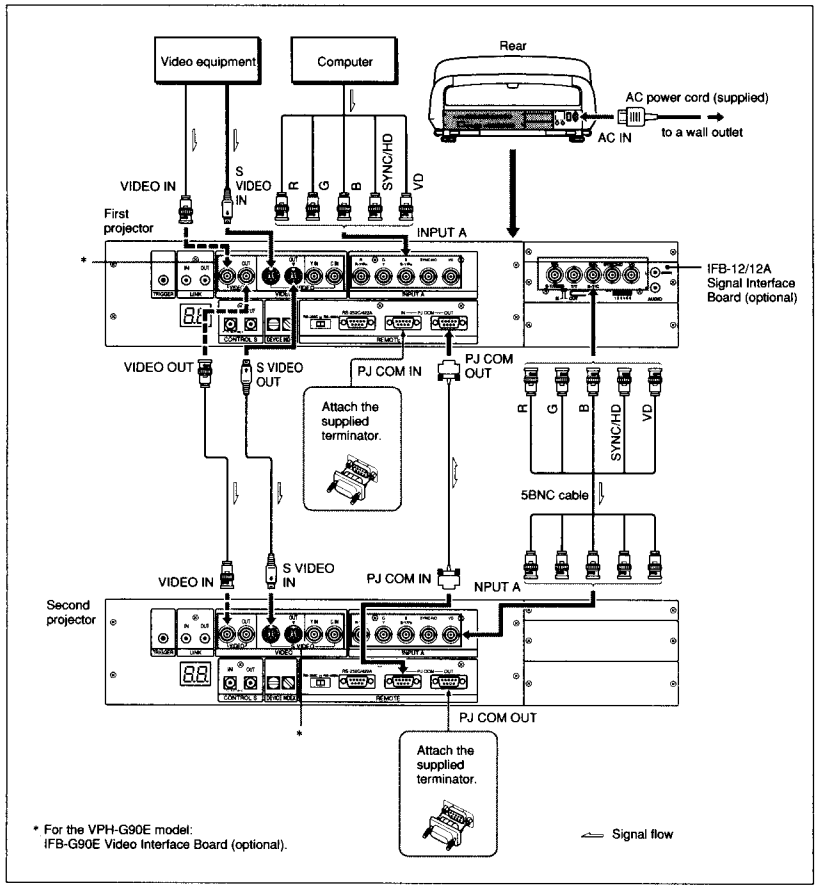

Note

Be sure to terminate the PJ COM IN or OUT connector not in use by attaching the supplied terminator.

Setting up

- Set the IN/OUT selector on the IFB-12/12A to OUT (output). The signal input to INPUT A is output from the IFB-12/12A.
- Set the device index number of the first projector which is connected directly to the video equipment or computer to "01," and the second projector to "02" *(page 142)*.
- Switch the 75-ohm terminate connectors on the BA board according to the connections of the computer and color monitor.
  For details, see "Switching the 75-ohm Terminate Connectors" on page 27.
- When using the remote commander as a wireless remote control, activate the remote control detector of a piece of the equipment in the system only and deactivate those of the other equipment. Perform the setting on the projector using "SIRCS RECEIVER" in the SET SETTING 2 menu *(page 64)*.

Using the PC-3000 Signal Interface Switcher

When you connect the PC-3000 Signal Interfrace Switcher (not supplied) to the INPUT A section, you can connect easily various input sources and switch them by pressing the SWITCHER/VIDEO MEMORY/INDEX keys on the remote commander.

When one PC-3000 switcher is used

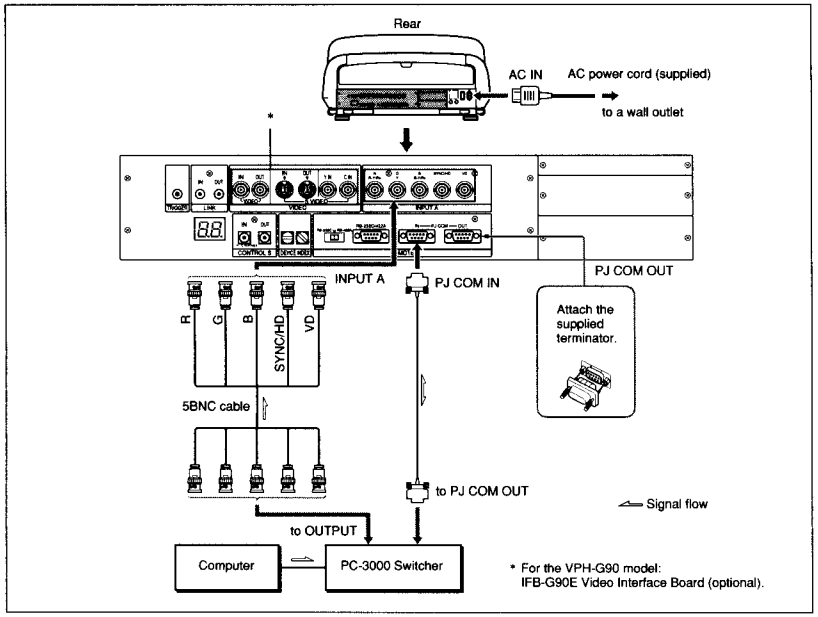

Note

Be sure to terminate the PJ COM IN or OUT connector not in use by attaching the supplied terminator.

Setting up

- Set the device index number of the projector to "01" *(page 142)*.
- Set the switcher number to "1"on the switcher.
  For setting, refer to the Operating Instructions of the switcher.
- When using the remote commander as a wireless remote control, activate the remote control detector of a piece of the equipment in the system only and deactivate those of the other equipment. Perform the setting on the projector using "SIRCS RECEIVER" in the SET SETTING 2 menu *(page 64)*.
  For setting on the switcher, refer to the Operating Instructions of the switcher.

When two or more PC-3000 switchers are used

This is an example to connect multiple PC-3000 switchers. Up to 8 switchers can be selected.

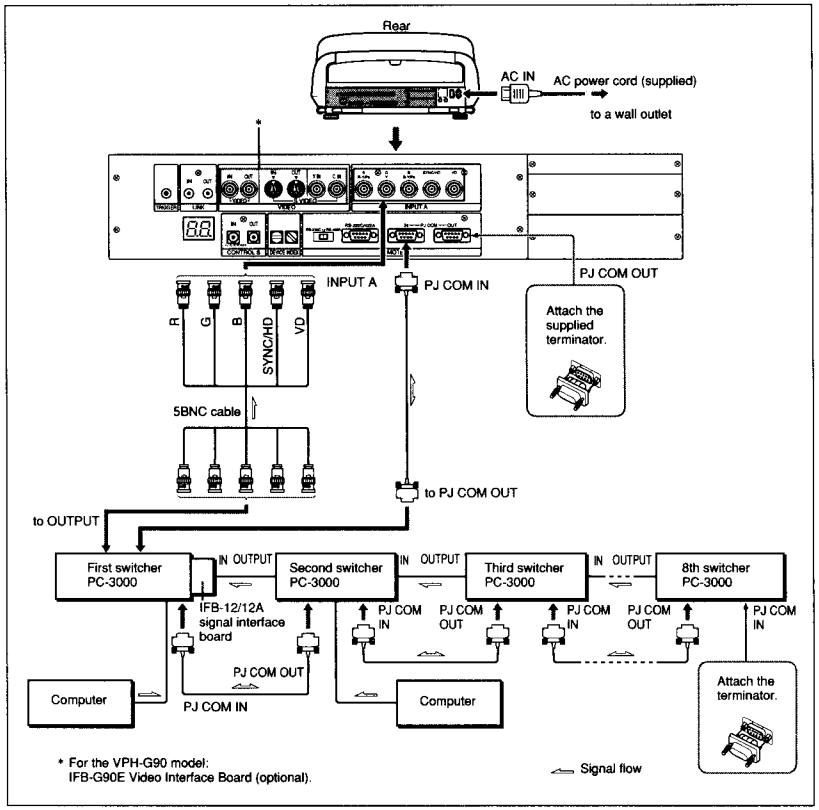

Notes

- Be sure to terminate the PJ COM IN or OUT connector not in use by attaching the supplied terminator.
- The signal from the second to 8th switchers should be input to the first switcher via the IFB-12/12A Signal Interface Board installed to slot 1 of the first switcher.
  For details, refer to the Operating Instructions of the switcher.

(continued)

Using the PC-3000 Signal Interface Switcher

Setting up

- Set the device index number of the projector to "01" *(page 142)*.
- Set the switcher number of the switcher which is connected directly to the projector to "1," and that of the second switcher to "2," and so on.
  For details, refer to the Operating Instructions of the switcher.
- When using the remote commander as a wireless remote control, activate the remote control detector of a piece of the equipment in the system only and deactivate those of the other equipment. Perform the setting on the projector using "SIRCS RECEIVER" in the SET SETTING 2 menu *(page 63)*.
  For setting on the switcher, refer to the Operating Instructions of the switcher.

Connecting multiple projectors using the PC-3000 switcher(s)

This is an example to connect multiple projectors and two PC-3000 switchers.
Install the IFB-12/12A Signal Interface Board to the INPUT B section of the first projector.

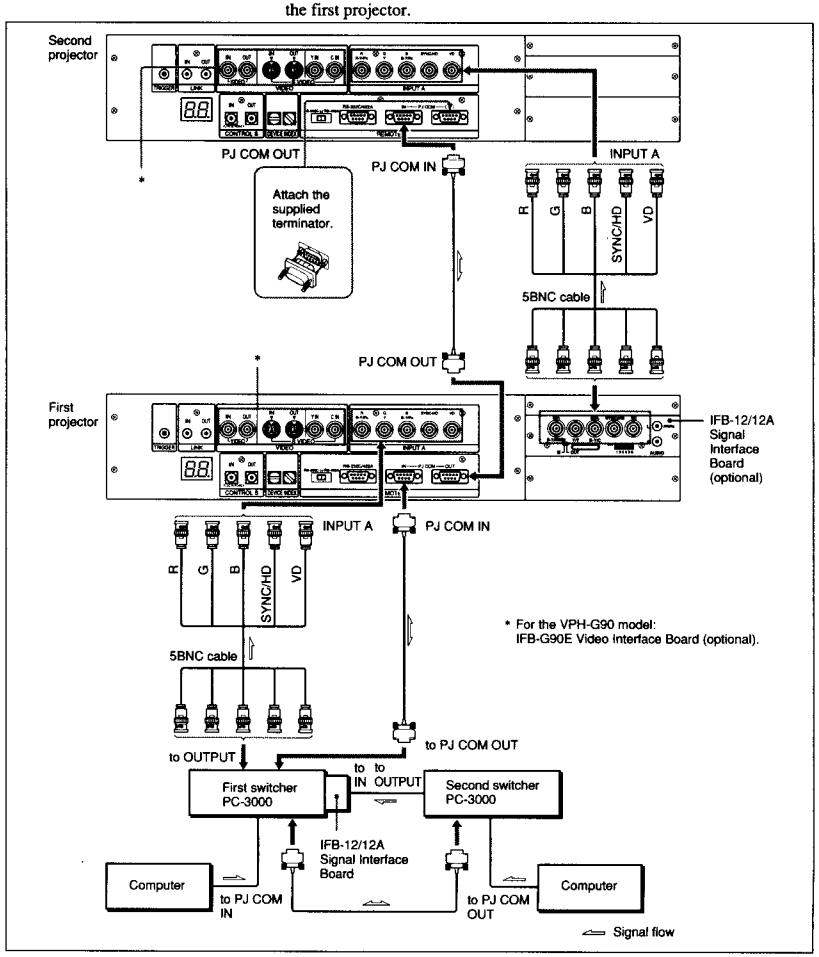

(continued)

Using the PC-3000 Signal Interface Switcher

Notes

- Be sure to terminate the PJ COM IN or OUT connector not in use by attaching the supplied terminator.
- The signal from the second switcher should be input to the first switcher via the IFB-12/12A signal interface board installed to slot 1 of the first switcher.
  For details, refer to the Operating Instructions of the switcher.

Setting up

- Set the IN/OUT selector on the IFB-12/12A to OUT (output). The signal input to INPUT A is output from the IFB-12/12A.
- Set the device index number of the first projector which is connected directly to the video equipment or computer to "01," and the second projector to "02." *(page 142).*
  For details, refer to the Operating Instructions of the switcher.
- Set the switcher number of the switcher which is connected directly to the projector to "1," and that of the second switcher to "2," and so on.
  For details, refer to the Operating Instructions of the switcher.
- When using the remote commander as a wireless remote control, activate the remote control detector of a piece of the equipment in the system only and deactivate those of the other equipment. Perform the setting on the projector using "SIRCS RECEIVER" in the SET SETTING 2 menu *(page 64).*
  For setting on the switcher, refer to the Operating Instructions of the switcher.

Confirming the System Construction

After all the connections are complete, confirm that equipment of the system is properly setup.

1. Connect the AC power cords of all equipment to the AC outlets.
2. Press the SYS SET key on the remote commander or the control panel. Information on the system construction and the settings of the interface boards, etc. are automatically confirmed. Then the message disappears.

Note

When you want to use the projector without connecting the switcher after using the switcher in the system connections, it is necessary to confirm the system construction again by pressing the SYS SET key after all the connections are complete. If you press the key, "Master Switcher not exit" appears, but the system construction is automatically recognized.

When a system error is detected

The following messages are displayed on the screen.

Message	Remedy
Master Switcher not exist.	Set the switcher that outputs the signal to the projector to number 1.
Same DEVICE INDEX for Projector detected.	Change either number of the projectors that have the same number.
Same DEVICE INDEX for Switcher detected.	Change either number of the switchers that have the same number.

Using the PC-1271/1271M Signal Interface Switcher

When you install the optional IFB-40 Signal Interface Board to the projector and connect the PC-1271/1271M Signal Interface Switcher to the IFB-40, you can connect easily various input sources.
You can select the input to the switcher easily by pressing the SWITCHER/VIDEO MEMORY/INDEX keys on the remote commander.

Connecting the PC-1271/1271M using the SIC-M or CCQ-BRS connecting cable

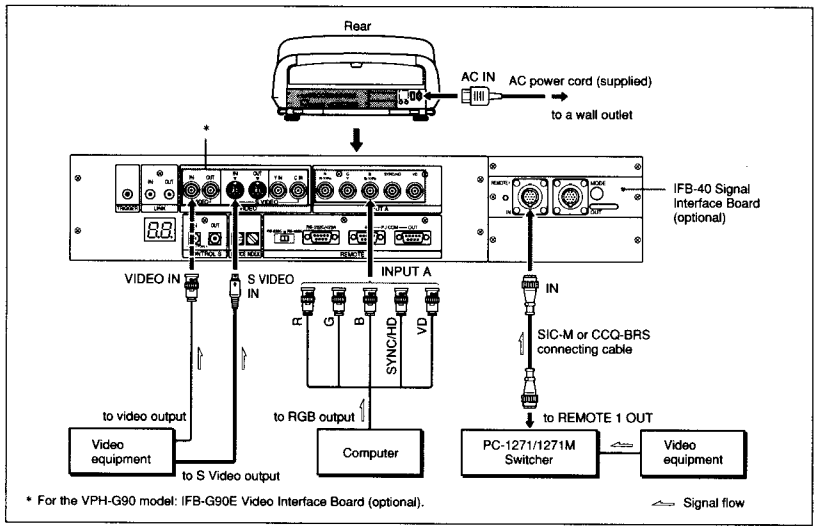

Choose the appropriate cable from the following table.

1 m	2 m	5 m	10 m	15 m	25 m	50 m
—	CCQ-2BRS	CCQ-5BRS	CCQ-10BRS	—	CCQ-25BRS	CCQ-50BRS
SIC-M-1	—	SIC-M-5	—	SIC-M-15	SIC-M-25	SIC-M-50

Notes

- Insert the female and male plugs of the SIC-M or CCQ-BRS cable correctly.
- You can extend the SIC-M or CCQ-BRS cable up to 50 m.
- The video signal input to the IFB-40 installed to the INPUT B section should not exceed 70 MHz. When projecting the video signal which exceeds 70 MHz, connect the signal source to the INPUT A connectors using the 5BNC cables.

Setting up

- Set INPUT-A in the SET SETTING 1 menu *(on page 62)* to RGB.
- Select VIDEO or S VIDEO by pressing the INPUT SELECT keys on the remote commander.
- Set the SINGLE/SECOND/OTHER select switch on the switcher to SINGLE.

Connecting the PC-1271/1271M using both the SIC-M or CCQ-BRS connecting cable and the 5BNC cables (5BNC mode 1)

When you connect both the video and RGB signal input sources to the PC-1271/1271M switcher, use the SIC-M or CCQ-BRS connecting cable and the BNC cables for connection between the projector and switcher.

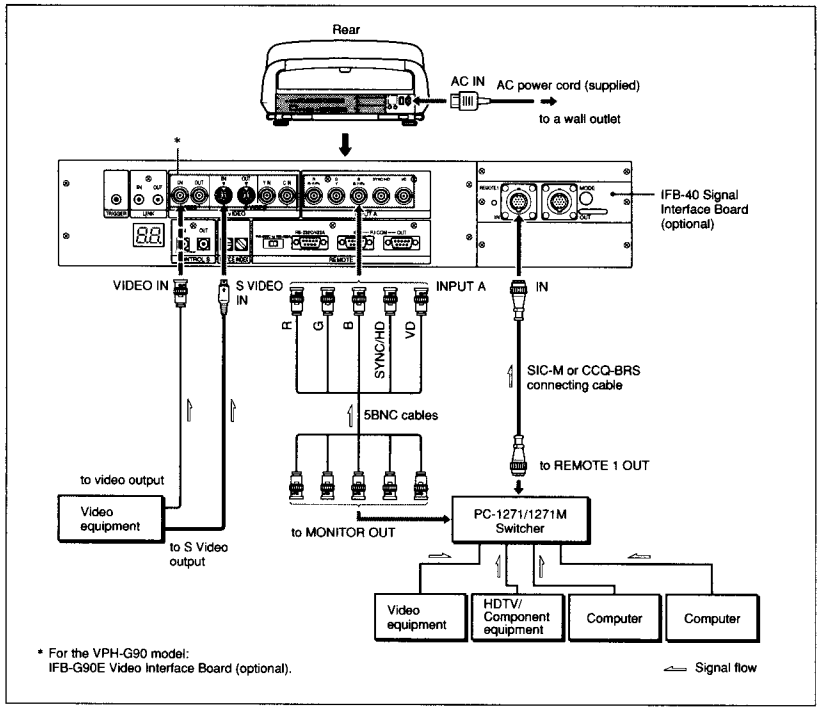

Notes

- Insert the female and male plugs of the SIC-M or CCQ-BRS cable correctly.
- You can extend the SIC-M or CCQ-BRS cable up to 50 m.
- The video signal input to the signal interface board IFB-40 installed to the INPUT B section should not exceed 70 MHz. When projecting the video signal which exceeds 70 MHz, connect the signal source to the INPUT A connectors using the 5BNC cables.

(continued)

Using the PC-1271/1271M Signal Interface Switcher

Setting up

- Set INPUT-A in the SET SETTING 1 menu *(page 62)* to RGB and 5BNC MODE in the SERVICE SETTING 1 menu *(page 69)* to ON.
- Select VIDEO or S VIDEO by pressing the INPUT SELECT keys on the remote commander.
- Set the SINGLE/SECOND/OTHER select switch on the switcher to SINGLE.

Connecting the PC-1271/1271M using the 5BNC cables (5BNC mode 2)

When the PC-1271/1271M switcher to be connected is more than 50 m away from the projector, or the SIC-M or CCQ-BRS cable cannot be used for the connection between the projector and switcher, connect the RGB signal sources to the switcher and the video signal sources to the projector.

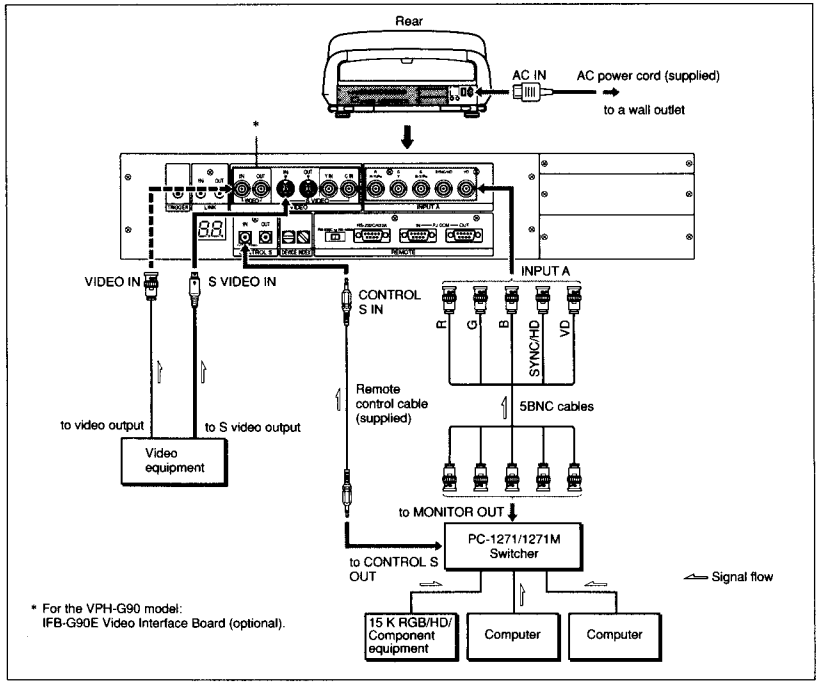

Setting up

- Set INPUT-A in the SET SETTING 1 menu *(page 62)* to RGB and 5BNC MODE in the SERVICE SETTING 1 menu *(page 69)* to ON.
- Select VIDEO or S VIDEO by pressing the INPUT SELECT keys on the remote control.
- Set the SINGLE/SECOND/OTHER select switch on the switcher to SINGLE.
- When the HDTV signal is input to the switcher, set the output of the connected equipment or the IFB-1301 Signal Interface Board installed to the switcher to GBR OUT.
- When the component signal is input to the switcher, set the output of the connected equipment or the IFB-1200 Signal Interface Board installed to the switcher to RGB OUT.

Before Adjustment

For Remote Control

All adjustments, except focusing the lens and adjusting the scheimpflug, can be made with the supplied remote commander.
Since the remote commander uses infrared, you can use it without a wire. However, in order to correctly control the projector, you should connect the remote commander to the projector with the supplied remote control cable.
Normally, the remote commander is set to the user mode and the adjustment keys on the remote commander are inoperable to prevent accidental adjustments. Cancel the protection before adjusting.

Preparation of the Remote Commander

1 Insert the three supplied R6 (size AA) batteries with the polarities lined up correctly.
For details, see "Battery installation" on page 44.

2 Connect the remote commander to the projector.
See "Connecting the remote commander to the projector" on page 45.

3 Make sure that the COMMAND ON/OFF switch on the remote commander is set to ON.

4 Turn on the MAIN POWER switch on the projector, and then press the ON key on the remote commander.

5 Open the panel cover of the adjustment keys.

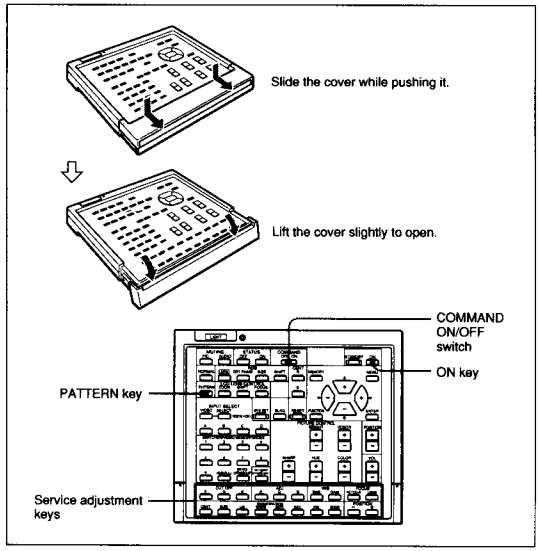

6 Press the keys in the following order:
ENTER → ENTER → ↑ → ↓ → ENTER

Be sure to press the keys one after another within 2 seconds.
The following display appears.

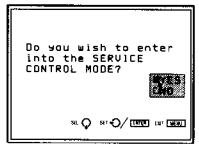

7 Press the ↑ or ↓ key to select YES, then press the ENTER key.

The protection on the adjustment keys is cancelled and the service adjustment keys are enabled (service mode).
After the adjustment, reset to the user mode to reactivate the protection.
To reset to the user mode, see "To exit from the service mode" on page 53.

For Remote Control

Notes for wireless remote control operation

- Be sure that there are no obstructions between the remote commander and the projector.
- Operating range is limited. The shorter the distance between the remote commander and the projector, the wider the angle in which the remote commander can control the projector.

Battery installation

1 Push to open the lid.

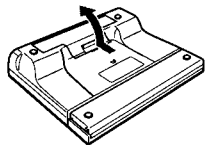

2 Install three R6 (size AA) batteries (supplied) with the correct polarity.

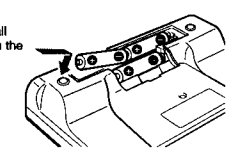

3 Replace the lid.

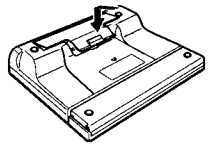

Notes on batteries

- If the projector does not operate properly, the batteries might be worn out. Replace all three of them with new ones.
- The life of the batteries depends on frequency of usage and how often you use the LIGHT button. If they are worn out quickly, replace them with new alkaline batteries.
- To avoid damage from possible battery leakage, remove the batteries when the remote commander will not be used for a long time.

Connecting the remote commander to the projector

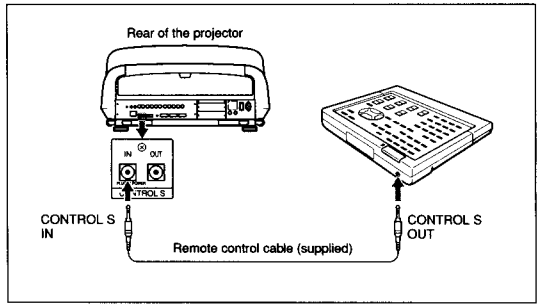

Note

When you connect the remote commander to the projector as mentioned above, the remote control detector of the projector does not function. For wireless operation, be sure to disconnect both plugs from the projector and the remote commander.

For Remote Control

Keys on the Remote Commander

Notes

- The RGB APA/DOT PHASE ❹, VOL +/– ⓰, FOCUS LENS ⓲, INPUT SELECT D ㉖, LCD LENS CONTROL ㉚ and AUDIO MUTING ㉜ keys do not function with this projector.
- The RGB SIZE/SHIFT ❹, CENT R/B ❻ and BLKG ㉘ keys function only in the pro-user, service or expert mode.
- The MG FOCUS ⓱, W/B BIAS/GAIN ⓴, REGISTRATION ㉑, ADJ R/G/B ㉒ and CUT OFF R/G/B ㉓ keys function only in the service or expert mode.

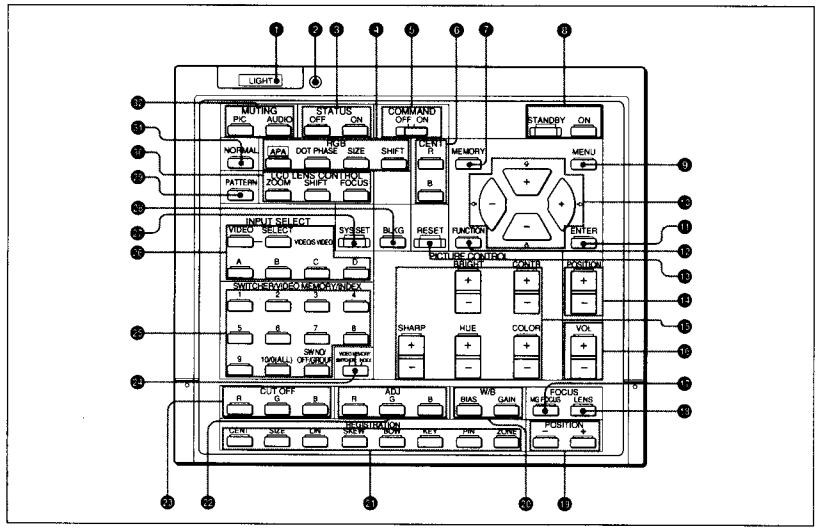

❶ LIGHT button
Illuminates the key indicators when the COMMAND switch ❺ is set to ON. If the COMMAND switch is set to OFF, only the COMMAND switch is illuminated.
The key indicators turn off if you press the LIGHT button again.
If you do not press any key for more than 30 seconds, the indicators also turn off automatically.
When the remote commander is connected to the CONTROL S IN/PLUG IN POWER jack of the projector via the remote control cable, the power is supplied to the remote commander from the projector.

❷ Transmission indicator
Lights each time you press a key. If it does not light, replace the batteries with new ones.

❸ STATUS ON/OFF keys
Press OFF to eliminate the on-screen display.
Press ON to restore the on-screen display.

Note
The menus and warning messages appear even if the OFF key is pressed.

❹ RGB keys
Adjust the picture.
APA: This key does not function with this projector.
DOT PHASE: This key does not function with this projector.
SIZE: Enters the size adjustment mode for the input signal. Next adjust the size of the picture using the four arrow keys. Each time you press this key, the COARSE and FINE modes are switched alternately.
←: to reduce horizontal size
→: to expand horizontal size
↑: to expand vertical size
↓: to reduce vertical size
SHIFT: Enters the shift adjustment mode for the input signal. Next adjust the position of the picture using the four arrow keys. The picture shifts in the direction of the arrow on the pressed key. Each time you press this key, the COARSE and FINE modes are switched alternately.

❺ COMMAND ON/OFF switch
No keys on the remote commander except the LIGHT button ❶ function when this switch is set to OFF. This saves battery power when a button is pressed inadvertently.

❻ CENT R/B keys
Enter the centering adjustment mode of the red and blue.
R: Press to enter the red centering adjustment mode.
B: Press to enter the blue centering adjustment mode.
Perform the centering adjustment using the four arrow keys.

❼ MEMORY key
Stores various adjusted data into memory.

❽ ON/SYANDBY keys
Turn on and off the projector when the MAIN POWER switch on the projector is set to ON.

❾ MENU key
Displays the main menu. Press it again to turn off the menu.

❿ Arrow keys
Adjust the value or select the item in the menu.

⓫ ENTER key
Stores the settings in the menu, or selects and displays the index number.

⓬ FUNCTION key
Press to use the extended functions.

⓭ RESET key
Resets the adjusted levels to the factory preset or service adjusted levels.
For details, see page 138.

⓮ POSITION +/– keys
Select the position to be adjusted on the screen in focus, registration or blanking adjustment mode.
Also, set V SHIFT to WIDE or NARROW in RGB or HDTV input signal's SHIFT adjustment mode and select the color temperature in white balance adjustment mode.

⓯ PICTURE CONTROL keys
Adjust the picture conditions: CONTR (contrast), BRIGHT (brightness), COLOR, HUE and SHARP (sharpness).

⓰ VOL (volume) +/– keys
These keys do not function with this projector.

⓱ MG FOCUS key
Enters the magnetic focus adjustment mode.
For details, see "Adjusting the green magnetic focus, AQP/DQP and AHP/DHP" on page 87.

⓲ FOCUS LENS key
This key does not function with this projector.

⓳ POSITION +/– keys
Function the same as the POSITION +/– ⓮ keys.

⓴ W/B (white balance) keys
Enter the white balance adjustment mode.
BIAS: Adjusts cut off.
GAIN: Adjusts drive.

㉑ REGISTRATION keys
CENT/SIZE/LIN/SKEW/BOW/KEY/PIN/ZONE
Select the desired item for registration adjustment with each key, then adjust the item with the arrow keys.
For details, see "Keys for Adjusting" on page 94.

㉒ ADJ R/G/B (adjust red/green/blue) keys
Select the color to be adjusted when adjusting the focus, registration and white balance adjustments.
R: Red signal
G: Green signal
B: Blue signal

For Remote Control

㉓ CUT OFF keys
Select the color to be turned off when adjusting the registration. Press again to turn on the color.
R: Red signal
G: Green signal
B: Blue signal

㉔ SWITCHER/VIDEO MEMORY/INDEX select switch
Selects the function of the SWITCHER/VIDEO MEMORY/INDEX keys.
SWITCHER: to select the input from the PC-3000 or the PC-1271/1271M Signal Interface Switcher.
VIDEO MEMORY: to select the set and adjusted video memory data.
INDEX: to select a projector by its index number when multiple projectors are used.

㉕ SWITCHER/VIDEO MEMORY/INDEX keys
When the SWITCHER/VIDEO MEMORY/INDEX select switch is set to SWITCHER
When the PC-3000 or the PC-1271/1271M Switcher is connected to the projector, press a number key (1 to 8) to select the input from the switcher. Number key 9 and the 10/0 (ALL) key do not function.
To select an input when multiple switchers are connected, set the SWITCHER/VIDEO MEMORY/INDEX select switch to SWITCHER, then press the **SW NO/OFF/GROUP** key. Next press the switcher number (1 to 8) and the input number (1 to 8) in sequence. Be sure to press the keys one after another within 2 seconds.
e.g. To select input 4 of switcher 2, press the keys as follows:
SW NO → 2 → 4.

When the SWITCHER/VIDEO MEMORY/INDEX select switch is set to VIDEO MEMORY
Select the number of the VIDEO MEMORY. To select the data set and adjusted in INPUT MEMORY, press the SW NO/**OFF**/GROUP key to set VIDEO MEMORY to OFF.

Note
The 10/0 (ALL) key can be used as "10" key only when the select switch is set to VIDEO MEMORY.

When the SWITCHER/VIDEO MEMORY/INDEX select switch is set to INDEX
When multiple projectors are connected, select the device index number of the projector to be adjusted. Press the device index number (1 to 99) and press the ENTER key. Be sure to press the keys one after another within 2 seconds.
e.g. To select 1, press the keys as follows:
0 → 1 → ENTER, or 1 → ENTER.
To select 12, press the keys as follows:
1 → 2 → ENTER.
When adjusting all the projectors simultaneously, press the 10/0 (ALL) key and ENTER key.

Note
Depending on the projector, pressing "0," "0" and "ENTER" is not effective.

To select the projector to be adjusted when the projectors are divided into multiple groups
First select the group index number and then the projector's device index number.
To select a group, press the SW NO/OFF/**GROUP** key, the group index number (1 to 99) and the ENTER key in sequence. When the group index has a double-digit number, be sure to press the SW NO/OFF/GROUP key before pressing each number key.
Then press the device index number of the projector (1 to 99) and finally press the ENTER key.
e.g. To select the index number 52 projector in group 91, press the keys as follows:
GROUP → 9 → GROUP → 1 → ENTER → 5 → 2 → ENTER.

㉖ INPUT SELECT keys
Select the input signal.
VIDEO: Video or S video signal input from the VIDEO connectors of the projector (VPH-G90U/G90M) or the optional IFB-G90E Video Interface Board (VPH-G90E)
SELECT VIDEO/S VIDEO: Selects video or S video signal input from the VIDEO connectors after pressing the VIDEO key.
A: The RGB, component or HDTV signal input from the INPUT A connectors of the projector
B: The signal input from the INPUT B section when the optional interface board other than the IFB-40 is installed
C: The signal input from the INPUT C section when the optional interface board is installed.
D: This key does not function with this projector.

Note
To switch the input signal from the INPUT A, INPUT B or INPUT C section to the S VIDEO IN (or Y IN/C IN) connectors, first press the VIDEO key, then press the SELECT VIDEO/S VIDEO key.

㉗ SYS SET (system set) key
When the PC-3000 Signal Interface Switcher is used in the system, press the key to confirm the status of the system, the settings of the interface board, and so on.

㉘ BLKG (blanking) key
Enters the blanking adjustment mode.
You can adjust the blanking with the four arrow keys.
For details, see "Blanking Adjustment" on page 124.

㉙ PATTERN key
Displays the internal test patterns of the projector.
Each press of the key advances the test pattern sequentially.
In the focus, registration or white balance adjustment mode, only the test patterns suitable for the adjustment will be displayed.
For details, see "Test Patterns" on page 75.

㉚ LCD LENS CONTROL keys
These keys do not function with this projector.

㉛ NORMAL key
Erases the test pattern or cancels the various adjustment modes.

㉜ MUTING keys
PIC (Picture): Cuts off the picture. To restore the picture, press the key again.
AUDIO: This key does not funcion with this projector.

Using the MENU

The projector is equipped with an on-screen menu for making various adjustments and settings.
There are four menu modes to limit the menu items according to the level of the operator of the projector.
The language used in the menu can be changed to French, German, Italian, Spanish, Japanese or Chinese.
For details, see "LANGUAGE" on page 64.

Basic Menu Operation

1 Press the MENU key.
The menu display appears.
The menu presently selected is highlighted in blue.

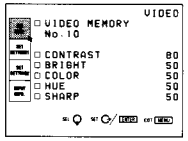

2 Use the ↓ or ↑ keys to select a menu, then press the → key or the ENTER key.
The selected menu appears.
The setting items that are indicated in white cannnot be selected.

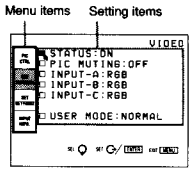

3 Use the ↓ or ↑ keys to select a setting item, then press the → key or the ENTER key.
The adjustment menu or the setting menu (pop-up menu) appears.

To go to the next page

If there are two or more pages for a menu, the ▼ indication appears below the bottom item. Move the cursor to the bottom item with the ↓ key, then press the ↓ key.

To go back to the previous page

Move the cursor to the top item with the ↑ key, then press the ↑ key.

4 Make adjustment or setting on the menu.

To change the adjustment level

To increase the level, press the ↑ or → key.
To decrease the level, press the ↓ or ← key.
Then press the ENTER key to store the level. The original screen is restored.

To select an item

Use the ↓ or ↑ key to select an item in a pop-up menu.
For some items, the result or effect of the selection is simultaneously reflected on the screen.
For the other items, press the ← key or the ENTER key to confirm the selection. The selected setting is stored and the pop-up menu disappears.

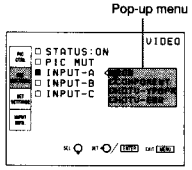

For details on setting individual items, see the relevant menu pages.

To clear the menu display

Press the MENU key or NORMAL key.
The menu display also disappears automatically if no key is pressed for about one minute.

Memory of the settings

The settings in the menus are automatically stored in the projector memory. You can also store the settings by pressing the MEMORY key.

Menu Modes

There are four menu modes for this projector.

User mode

This is the menu mode for end users. Only the minimum menu items for usual settings and adjustments appear in this mode.

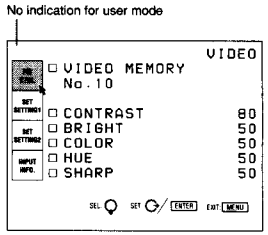

The user mode is factory preset. By pressing the MENU key for the first time, the user mode appears.

Using the MENU

Pro-user mode (P)

This is the menu mode for advanced end users who know the operation and functions of the projector very well. The menu items for detailed settings and adjustments are provided so that they can get the most of the projector functions.

Pro-user mode indication

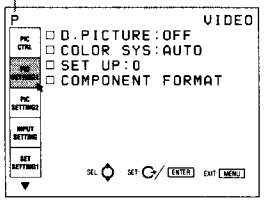

To set to the pro-user mode

1 Press the MENU key.
The menu in the user mode appears.

2 Press the ↓ or ↑ key to select SET SETTING 1, then press the ENTER or → key.

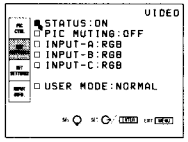

3 Press the ↓ or ↑ key to select USER MODE, then press the ENTER or → key.

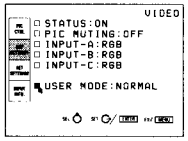

4 Press the ↓ or ↑ key to select PRO in the pop-up menu, then press the ENTER or ← key.
The menu disappears.

5 Press the MENU key.
The menu in the pro-user mode appears with the letter "P" at the top-left of the screen.

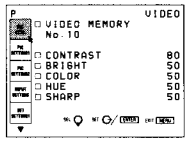

To reset to the user mode

Perform the same steps for setting to the pro-user mode, and set USER MODE in the SET SETTING 1 menu to NORMAL.
Press the ENTER or ← key to turn off the menu. When the MENU key is pressed again, the menu in the user mode appears.

Note

When you cancel the service mode or expert mode, the menu mode is reset to either the user mode or the pro-user mode according to the setting of USER MODE in the SET SETTING 1 menu.

Service mode (S)

This is the menu mode for service personnel who are engaged in the installation, adjustments and maintenance of the projector. The menu items required for their jobs are provided.

Service mode indication

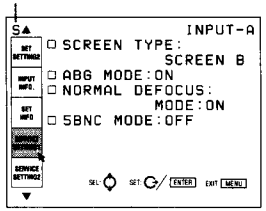

To set to the service mode

1 Press the NORMAL key.

2 Press the keys in the following order:
ENTER → ENTER → ↑ → ↓ → ENTER

Be sure to press the keys one after another within 2 seconds.
The following display appears.

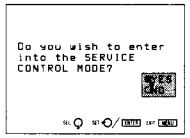

3 Press the ↓ or ↑ key to select YES, then press the ENTER key.
If you select NO, the display disappears without changing the menu mode.

4 Press the MENU key.
The menu in the service mode appears with the letter "S" at the top-left of the screen.

To exit from the service mode

When you press the ON/STANDBY key after the adjustment in the service mode, the projector is set to the standby mode and the menu mode is returned to the user or pro-user mode automatically.
To reset to the user or pro-user mode before setting the projector to the standby mode, do the following:

1 Press the NORMAL key.

2 Press the keys in the following order:
ENTER → ENTER → ↑ → ↓ → ENTER

Be sure to press the keys one after another within 2 seconds.
The following display appears.

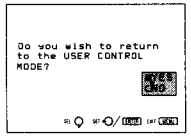

3 Press the ↓ or ↑ key to select YES, then press the ENTER key.
If you select NO, the display disappears leaving the service mode.

When you press the MENU key, the menu in the user or pro-user mode will appear.

Using the MENU

Expert mode (E)

This is the menu mode for the expert service personnel who have specialized technology and knowledge on the projector.

Note

Normally do not use this mode. An inappropriate operation in this mode may degrade the performance of the projector.

Expert mode indication

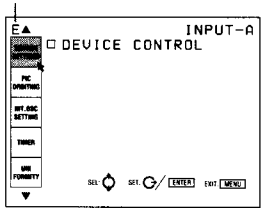

To set to the expert mode

1 Set the projector to the service mode.
For details, see "To set to the service mode" on page 53.

2 Press the NORMAL key.

3 Press the keys in the following order:
ENTER → ENTER → ← → → → ENTER

Be sure to press the keys one after another within 2 seconds.
The following display appears.

4 Press the ↓ or ↑ key to select YES, then press the ENTER key.
If you select NO, the display disappears without changing the menu mode.

5 Press the MENU key.
The menu in the expert mode appears with the letter "E" at the top-left of the screen.

To exit from the expert mode

When you press the ON/STANDBY key after the adjustment in the expert mode, the projector is set to the standby mode and the menu mode is returned to the user or pro-user mode automatically.
To reset to the service mode before setting the projector to the standby mode, do the following:

1 Press the NORMAL key.

2 Press the keys in the following order:
ENTER → ENTER → ← → → → ENTER

Be sure to press the keys one after another within 2 seconds.
The following display appears.

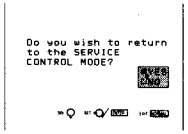

3 Press the ↓ or ↑ key to select YES, then press the ENTER key. The service mode is set.
If you select NO, the display disappears leaving the expert mode.

The PIC CTRL (Picture Control) Menu

(User/Pro-user/Service/Expert modes)

The PIC CTRL menu displays the information on the picture adjustments. To adjust the picture, use the keys on the remote commander.
Items that can be adjusted are highlighted in green.
You cannot select the items indicated in white.

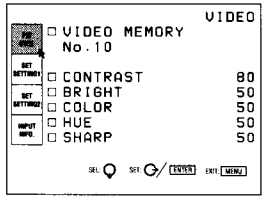

VIDEO MEMORY

Indicates the number of video memory.
The number 1 to 10 can be selected with the VIDEO MEMORY keys on the remote commander.

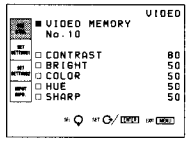

The video memory is a part of the SET MEMORY, and stores 10 types of the aspect ratio, picture quality, etc.
Select a video memory number 1 to 10, then the aspect ratio and picture quality that you adjust will be stored in the selected video memory.
If you want to use the aspect ratio and picture quality data stored in the INPUT MEMORY, select OFF.

Contents of the video memory data

COLOR TEMPERATURE, D. PICTURE, V SHIFT WIDE/NARROW, COMPONENT FORMAT, COMB FILTER DRC LEVEL, CONTRAST, BRIGHT, COLOR, HUE, SHARP, RGB SIZE, RGB SHIFT, BLANKING
For details, see "Video Memory" on page 137.

Aspect ratios preset at the factory

The data for the following aspect ratios have been stored in each video memory number at the factory.

No.	Aspect ratio
1	4 : 3
2	4 : 3
3	4 : 3
4	4 : 3
5	4 : 3
6	16 : 9
7	16 : 9
8	16 : 9
9	16 : 9
10	16 : 9

Using the MENU

CONTRAST

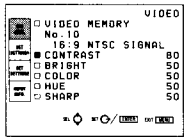

The higher the setting, the greater the contrast.
The lower the setting, the lower the contrast.

BRIGHT (brightness)

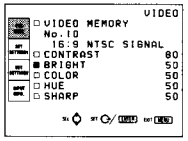

The higher the setting, the brighter the picture.
The lower the setting, the darker the picture.

COLOR

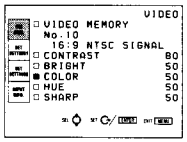

The higher the setting, the greater the intensity.
The lower the setting, the lower the intensity.

HUE

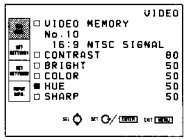

At high settings, the picture becomes greenish.
At low settings, the picture becomes purplish.

SHARP (sharpness)

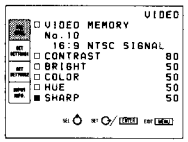

The higher the setting, the sharper the picture.
The lower the setting, the softer the picture.

Input signals and adjustable/setting items

Item	Input signal			
	Video or S video (Y/C)*	Component SDI 4:2:2	HDTV	RGB
VIDEO MEMORY	Y	Y	Y	Y
CONTRAST	Y	Y	Y	Y
BRIGHT	Y	Y	Y	Y
COLOR	Y	Y	Y	N
HUE	Y (NTSC3.58/ NTSC4.43 system only)	Y	Y	N
SHARP	Y	Y	Y	N

Y: Adjustable/can be set
N: Not adjustable/cannot be set

* For the VPH-G90E model, the optional IFB-G90E Video Interface Board is required.

The PIC SETTING 1 (Picture Setting 1) Menu

(Pro-user/Service/Expert modes)

The PIC SETTING 1 menu is used for setting the picture quality.
Items that can be set are highlighted in green.
You cannot select the items indicated in white.

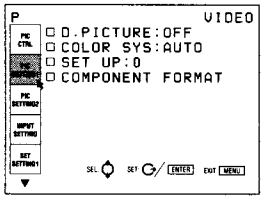

D. (Dynamic) PICTURE

Emphasizes the black of the composite video, S video (Y/C) or component signal.

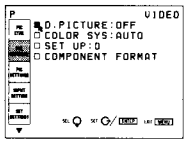

ON: Emphasizes the black to produce a bolder "dynamic" picture.
OFF: Reproduces the dark portions of the picture accurately, in accordance with the source signal.

COLOR SYS (System)

Selects the color system of the composite video or S video (Y/C) signal.

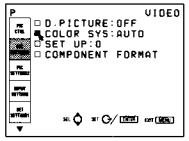

Select among AUTO, NTSC3.58, PAL, SECAM, NTSC4.43 and PAL-M.
Normally, set to AUTO.
If the picture is distorted or colorless, select the color system according to the input signal.

SET UP

Changes the set up level (standard black level) to 0 IRE or 7.5 IRE according to the NTSC source signal.

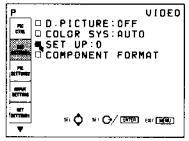

0 IRE: Normally, set to this position.
7.5 IRE: Set to this position when the black color is too light.

COMPONENT FORMAT

Selects the format of the component input signal.

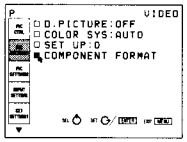

SMPTE/EBU-N10: Set to this position if the input signal is the SMPTE or EBU-N10 format component signal.
BETACAM7.5: Set to this position if the input signal is the Betacam format component signal.

Input signals and adjustable/setting items

Item	Input signal			
	Video or S video (Y/C) *	Component SDI 4:2:2	HDTV	RGB
D. PICTURE	Y	Y	N	N
COLOR SYS	Y	N	N	N
SET UP	Y (NTSC3.58/ NTSC4.43 system only)	N	N	N
COMPONENT FORMAT	N	Y	N	N

Y: Adjustable/can be set
N: Not adjustable/cannot be set

* For the VPH-G90E model, the optional IFB-G90E Video Interface Board is required.

The PIC SETTING 2 (Picture Setting 2) Menu

(Pro-user/Service/Expert modes)

The PIC SETTING 2 menu is used for setting the picture quality.
Items that can be set are highlighted in green.
You cannot select the items indicated in white.

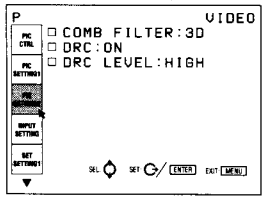

COMB FILTER

Selects the comb filter which reduces the cross color and dot interference of the NTSC signal to reproduce clear images.

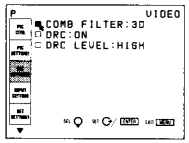

3D: Three-dimensional comb filter. Normally use this comb filter.
3LINE: 3LINE comb filter. This comb filter may be more effective for fast-moving pictures.

DRC (Digital Reality Creation)

Set to ON to make the NTSC signal 4-times density image.

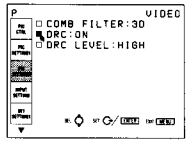

Normally set to ON. When a 15 kHz signal is input, the DRC function activates. When the DRC is not required, set to OFF.

Note

The DRC is effective only when the 15 kHz signal complies with the timing of the video signal. If it has a particular timing, the image may be disturbed with the DRC ON.

DRC LEVEL

Selects the effect of the DRC for the NTSC signal. This item can be selected only for an interlaced signal.

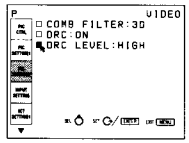

HIGH is preset at the factory. Select LOW if the picture is glaring.

Input signals and adjustable/setting items

Item	Input signal			
	Video or S video (Y/C) *	Component SDI 4:2:2	HDTV	RGB
COM FILTER	Y (NTSC3.58 system only)	N	N	N
DRC	Y	Y	N	Y (15 kHz RGB only)
DRC LEVEL	Y	Y	N	Y (15 kHz RGB only)

Y: Adjustable/can be set
N: Not adjustable/cannot be set

* For the VPH-G90E model, the optional IFB-G90E Video Interface Board is required.

The INPUT SETTING Menu

(Pro-user/Service/Expert modes)

The INPUT SETTING menu is used to adjust the input signal.
Items that can be adjusted are displayed in green.
You cannot select the items indicated in white.

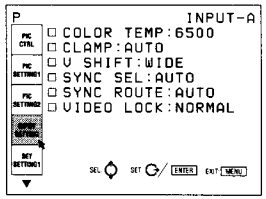

COLOR TEMP (Temperature)

Selects the appropriate color temperature according to your application and the input source signal.

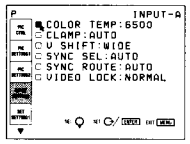

9300: standard color temperature for consumer-use products
6500: standard color temperature for business-use products
5400: standard color temperature for HDTV
3200: standard color temperature for medical products and studio cameras
CUSTOM: If you wish to make the color of a particular input signal uniform to that of another display, select CUSTOM, then adjust the white balance.

For details, see "Adjusting the White Balance" on page 125.

Using the MENU

CLAMP

Corrects the luminance of the input picture.

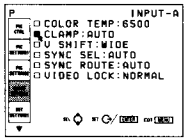

CLAMP is used as a standard for setting the black level of a picture correctly. The standard position of the clamp depends on the kind of sync signal being used. Normally, the projector CPU judges the signal and sets the position automatically. However, the CPU can misjudge the signal because of noise. If the luminance of the picture seems to be incorrect, the clamp position may need to be changed.

AUTO: Automatic setting mode. Normally set to this position.
SonG: Set to this position if the black seems too light or greenish.
H/C: Set to this position if the picture is too dark or luminance is unstable.
HP: If the luminance is still incorrect after changing to the SonG or H/C position, set to this position and perform the H-SHIFT adjustment.
TRI-LEVEL S: Set to this position if the picture is dark when using the tri-level sync.

Notes

- If the external signal does not have the SonG signal, the H/C position is recommended.
- If the luminance is still incorrect after changing the clamp setting, check the input signal and the connections.

V (Vertical) SHIFT

Sets the adjustable range of the vertical shift of the input signal.

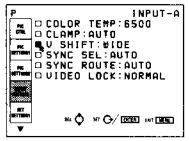

WIDE: Normally, set to this position (factory preset).
NARROW: When some signal such as a superimposed signal with unstable vertical sync. signal is input, the picture may be distorted vertically. In this case, set to this position. Adjustable range in the lower direction will become narrow.

Note

When the video, S video, component or SDI4:2:2 signal is input, V SHIFT is fixed to NARROW.

SYNC SEL (select)

Selects the sync signal when using an external sync signal.

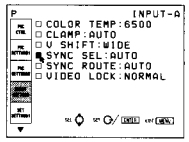

When an RGB signal is input

AUTO: Automatic setting mode. Normally set to this position.
SonG: Set to this position if you project the picture using the sync on G signal.
C: Set to this position if you project the picture using the composite sync signal.
HV: Set to this position when using the horizontal/vertical sync signal.

When an HDTV signal is input

You can select the items below instead of the above items.

AUTO: Automatic setting mode. Normally set to this position.
INT: Set to this position when using the internal sync signal.
EXT [C]: Set to this position when using the external composite sync signal.
EXT [HV]: Set to this position when using the external horizontal/vertical sync signal.

Note

For an RGB signal, this item can be selected only when SonG and C/HV are included.

SYNC ROUTE

Selects the route of the sync signal when the RGB signal is input to INPUT A.

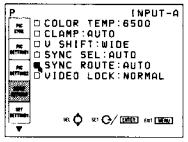

AUTO: Automatic setting mode. Normally set to this position.
NORMAL: Set to this position for a normal sync input, that is, when there is no video signal in the sync line.
SYNC w VIDEO: Set to this position when the video signal is on the sync line and the sync of the image is distorted in the AUTO position.

VIDEO LOCK

Selects the range of the frequency deviation of the input signal so that the INPUT MEMORY data is switched automatically if the frequency deviation exceeds the selected range. This item can be selected only for RGB input signals.

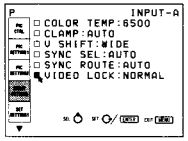

NORMAL: Normally set to this position.
WIDE: Set to this position if the input signal is unstable or flickers. This phenomenon may appear during variable speed playback by the VCR. etc.

Input signals and adjustable/setting items

Item	Input signal			
	Video or S video (Y/C) *	Component SDI 4:2:2	HDTV	RGB
COLOR TEMP	Y	Y	Y	Y
CLAMP	N	N	N	Y
V SHIFT	N	N	Y	Y
SYNC SEL	N	N	Y	Y
SYNC ROUTE	N	N	N	Y
VIDEO LOCK	N	N	N	Y

Y: Adjustable/can be set
N: Not adjustable/cannot be set

* For the VPH-G90E model, the optional IFB-G90E Video Interface Board is required.

The SET SETTING 1 Menu

(User/Pro-user/Service/Expert modes)

The SET SETTING 1 menu is used for changing the default settings of the projector.
Items that can be adjusted are highlighted in green.
You cannot select the items indicated in white.

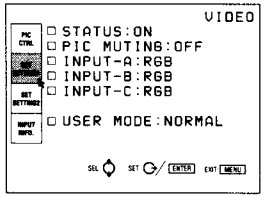

STATUS

Selects the on-screen display mode.

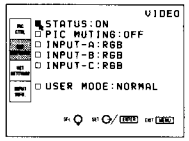

ON: Shows all of the on-screen displays.
OFF: Turns off all of the on-screen displays except for warning messages and menu displays.

PIC. (Picture) MUTING

Set to ON to cut off the picture.
When set to ON, "PIC MUTING" appears on the screen.

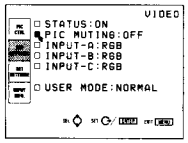

INPUT A

Selects the signal input from the INPUT A connectors.

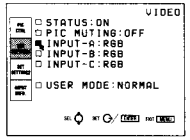

RGB: Inputs the RGB signal.
COMPONENT: Inputs the component signal.
HDTV-YPBPR: Inputs the HDTV (YPBPR) signal.
HDTV-GBR: Inputs the HDTV(GBR) signal.

Note
This item cannot be selected when the PC-3000 Signal Interface Switcher is connected to this projector.

INPUT B

Selects the signal input from the IFB-12/12A Signal Interface Board (not supplied) installed to the INPUT B section and set to the INPUT mode.

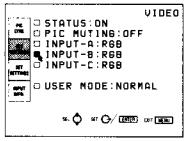

RGB: Inputs the RGB signal.
COMPONENT: Inputs the component signal.
HDTV-YPBPR: Inputs the HDTV (YPBPR) signal.
HDTV-GBR: Inputs the HDTV(GBR) signal.
VIDEO: Inputs the composite video signal.
S-VIDEO: Inputs the S video signal.

Note
When a signal interface board other than the IFB-12/12A is installed or the IFB-12/12A is set to the OUTPUT mode, the menu items cannot be selected.

INPUT C

Selects the signal input from the IFB-12/12A Signal Interface Board (not supplied) installed to the INPUT C section and set to the INPUT mode.

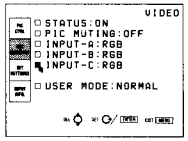

RGB: Inputs the RGB signal.
COMPONENT: Inputs the component signal.
HDTV-YPBPR: Inputs the HDTV (YPBPR) signal.
HDTV-GBR: Inputs the HDTV(GBR) signal.
VIDEO: Inputs the composite video signal.
S-VIDEO: Inputs the S video signal.

Note
When a signal interface board other than the IFB-12/12A is installed or the IFB-12/12A is set to the OUTPUT mode, the menu items cannot be selected.

USER MODE

Selects the menu mode between the user mode and the pro-user mode.

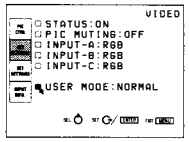

NORMAL: User mode
PRO: Pro-user mode

For details, see "Menu Modes" on page 51.

Note
When you change the setting of this item in the service or expert mode, the menu will change to the selected user or pro-user mode after you have exited from the service or expert mode.

The SET SETTING 2 Menu

(User/Pro-user/Service/Expert modes)

The SET SETTING 2 menu is used for changing the default settings of the projector.
Items that can be adjusted are highlighted in green.
You cannot select the items indicated in white.

User mode

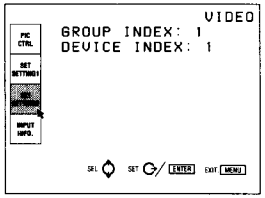

GROUP INDEX

Indicates the group index number when the group index is set.

Note
The group index number can be set in the pro-user, service or expert mode.

DEVICE INDEX

Indicates the device index number which is set by the DEVICE INDEX switches on the rear of the projector.

Using the MENU

Pro-user/Service/Expert mode

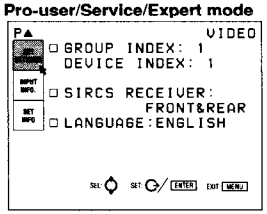

GROUP INDEX

Sets the group index number with which multiple projectors and switcher are assigned in the same group. 1 to 99 group index number can be set.

For details on the group index, see "Setting the Index Number" on page 141.

DEVICE INDEX

Indicates the device index number which is set by the DEVICE INDEX switches on the rear of the projector.

SIRCS RECEIVER

Selects the remote control detectors on the front and rear of the projector, if the wireless remote control does not operate correctly due to the influence of a fluorescent lamp, etc.

FRONT & REAR: Activates both the front and rear detectors.
FRONT: Activates the front detector only.
REAR: Activates the rear detector only.
OFF: Deactivates both the front and rear detectors.

LANGUAGE

Selects the language used in the on-screen displays.

Available languages are: ENGLISH, FRANÇAIS (French), DEUTSCH (German), ITALIANO (Italian), ESPANOL (Spanish), 日本語 (Japanese) and 中文 (Chinese).

The INPUT INFO (Information) Menu

(User/Pro-user/Service/Expert modes)

The INPUT INFO menu displays the information on the current input signal.

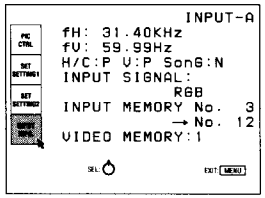

fH (Horizontal frequency)

Indicates the horizontal frequency of the input signal. This indication is not an absolute value, but is only used as a guide.
The horizontal frequency of the input signal is indicated in green; that of the internal signal in yellow.

fV (Vertical frequency)

Indicates the vertical frequency of the input signal. This indication is not an absolute value, but is only used as a guide.
The vertical frequency of the input signal is indicated in green; that of the internal signal in yellow.

H/C (Horizontal/Composite sync)
V (Vertical sync)
SonG (Sync on Green)

Indicates the polarity and use of each sync signal.
P: The polarity of the sync signal is positive.
N: The polarity of the sync signal is negative.
–: No sync signal is input.

INPUT SIGNAL

Displays the type of current input signal.
INT. OSC: No input
COMPONENT: Component input signal
IDTV: IDTV input signal from the optional PC-1271/1271M Signal Interface Switcher via the optional IFB-3000 Interface Board installed to the PC-1271/1271M.
RGB: RGB input signal
HDTV YPBPR: HDTV YPBPR input signal
HDTV GBR: HDTV GBR input signal
15 kRGB: 15 kHz RGB input signal
SDI 4:2:2: SDI 4:2:2 input signal
DRC: when the DRC is set to ON

Video or S video signals
NTSC 3.58: NTSC 3.58 input signal
NTSC 4.43: NTSC 4.43 input signal
PAL: PAL input signal
PAL-M: PAL-M input signal
SECAM: SECAM input signal
B/W: Black and white input signal
S-VIDEO: S video input signal

INPUT MEMORY No.

The upper number is the memory number of the data automatically loaded when the current signal is input. The lower number is the new memory number in which the adjustment data of the current input signal is stored. The existing memory number is displayed in green, and a new memory number in yellow.
For details, see "Input Memory" on page 133.

VIDEO MEMORY

The selected video memory number is indicated.

The INPUT MEM. (memory) OPTION Menu

(Expert mode)

This projector is provided with the INPUT MEM. OPTION menu especially for the expert service personnel. To display the INPUT MEM. OPTION menu in the expert mode, first enter into the expert mode. Then display the INPUT INFO menu and press the ➡ key.

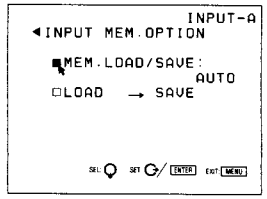

For details on the input memory, see "Input Memory" on page 133.

MEM. LOAD/SAVE

Specifies the input memory number to be loaded or saved.

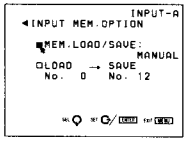

AUTO: Set to this position to select the input memory number to be loaded or saved automatically according to the type of input signal. This position is selected at the factory.

MANUAL: Set to this position to specify the input memory number to be loaded or saved. This position is useful when the loaded input memory number is unstable because there are two or more input signals whose frequencies are very similar, or when you want to assign a specified input memory number for the specified input source, or when you want to save the adjusted data to the specified input memory number.
When MANUAL is selected, "LOAD→SAVE" becomes selectable.

LOAD→SAVE

Specifies the input memory numbers to be loaded and saved when MEM. LOAD/SAVE is set to MANUAL.

Press the ⬇ or ⬆ key to select LOAD or SAVE, and specify the desired input memory number with the ⬅ or ➡ key.

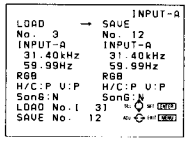

After specifying, press the ENTER key. The following display appears.

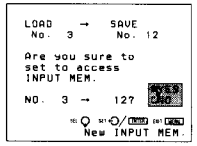

Press the ⬇ or ⬆ key to select YES, then press the ENTER key. The specified input memory numbers are stored in memory and the INPUT MEM. OPTION menu is resumed.
If you select NO, the specified numbers are canceled and the INPUT MEM. OPTION menu is resumed.

Notes

- You cannot specifiy a non-existent memory number (displayed in yellow) as LOAD.
- When MEM. LOAD/SAVE is set to MANUAL, the specified input memory numbers are effective even if the input signal or the input channel changes.
- Before you reset MEM. LOAD/SAVE from MANUAL to AUTO, press the MEMORY key to save the data stored in the memory number specified as LOAD to the memory number specified as SAVE.

Using the MENU

The SET INFO (Information) Menu

(Pro-user/Service/Expert modes)

The SET INFO menu displays the information on the serial number and the software version.

Pro-user mode

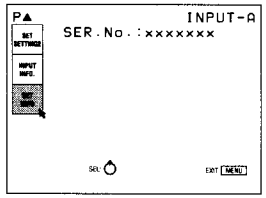

Service/Expert modes

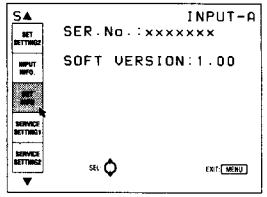

SER. (serial) No.

Indicates the serial number of the projector.

SOFT VERSION

Indicates the version of the software used for the projector.

The SERVICE SETTING 1 Menu

(Service/Expert modes)

The SERVICE SETTING 1 menu is used for the adjustments performed by the service personnel.

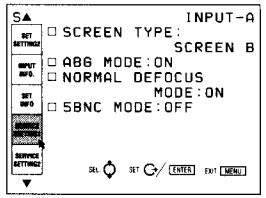

SCREEN TYPE

Selects the screen to be used.

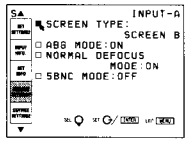

SCREEN B: Bead screen (equivalent to screen gain 2.0)
SCREEN M: Mat screen (equivalent to screen gain 1.3)

ABG (Automatic Background) MODE

Normally, set to ON (factory setting). Cutoff luminance will be set to a certain level. Set to OFF if you want to erase the horizontal luminescent line for cutoff level detection that may appear at the upper part of the picture.

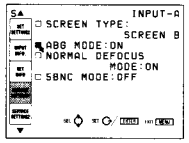

Note

When ABG MODE is set to OFF, the black level of the white balance may change.

NORMAL DEFOCUS MODE

Selects if the projector performs defocusing during projection.

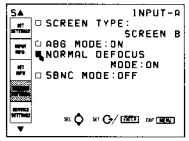

ON: Normally set to this position. Just focusing is applied during the magnetic focus adjustment, and defocusing is applied when you exit from the magnetic focus adjustment mode.
OFF: Just focusing is applied even during projection.

5BNC MODE

Set to ON when you connect the MONITOR OUT connector on the PC-1271/1271M Signal Interface Switcher (not supplied) to the INPUT A connectors with the 5BNC cables.

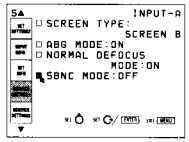

The SERVICE SETTING 2 Menu

(Service/Expert modes)

The SERVICE SETTING 2 menu is used for the adjustments performed by the service personnel.

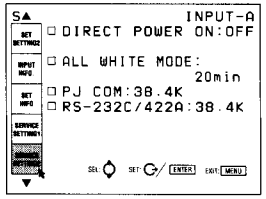

DIRECT POWER ON

Set to ON to turn on the projector by pressing the MAIN POWER switch on the projector. Set to OFF to enter standby mode by pressing the MAIN POWER switch.

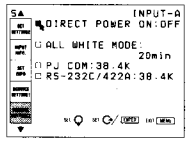

Note

When the projector is in standby mode with DIRECT POWER ON set to ON, the projector will be turned on automatically if the power interruption occured and has been restored.

ALL WHITE MODE

Sets the duration of all white mode during a warm-up period.

Use the ↑, ↓, ← or → key to set the duration in 1 minute increments from 0 to 99 minutes.
To set the projector to display the picture immediately after the projector is turned on, set the duration to "0 min."

PJ. COM (projector communication)

Sets the communication baud rate for the PJ. COM terminal to 38.4 K, 19.2 K or 9600.

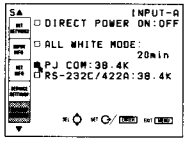

RS-232C/422A

Sets the communication baud rate for the RS-232C/422A terminal to 38.4K, 19.2K or 9600.

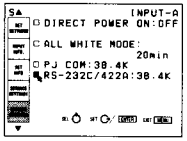

The SERVICE SETTING 3 Menu

(Expert mode)

The SERVICE SETTING 3 is used for the adjustments performed by the specialized service personnel only.

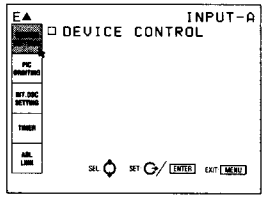

DEVICE CONTROL

This item is used when the service personnel has replaced the internal board. Do not use this item normally.

The PIC ORBITING Menu

(Service/Expert modes)

The PIC ORBITING menu is used to shift the image on the screen automatically to prevent the CRT burn.

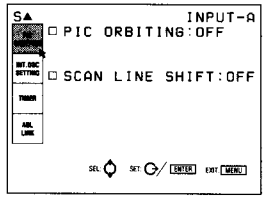

PIC ORBITING

Set to ON to shift the images on the multiple projector screens regularly to prevent the CRT burn. This mode is recommended when you project a still picture for a long time.

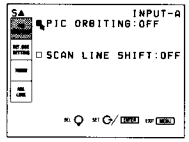

SCAN LINE SHIFT

Set to ON to shift the vertical position of the images on the multiple projector screens regularly to prevent the CRT burn. This mode is recommended when you project a signal with a low horizontal frequency.

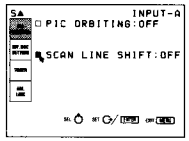

The INT. OSC (Internal oscillation) SETTING Menu

(Service/Expert modes)

The INT. OSC SETTING menu is used for activating the internal oscillator.

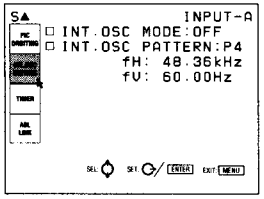

INT. (internal) OSC. (ocillation) MODE

Set to ON to activate the internal oscillator.

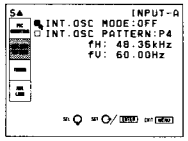

Note

When no signal is input, you cannot select this item.

INT. (Internal) OSC (Oscillation) PATTERN

Selects the oscillation frequency pattern generated with the internal oscillator.
The horizontal and vertical frequencies for the selected pattern are displayed on the screen.

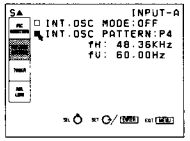

P1: fH = 15.73 kHz, fV = 60.00 Hz
P2: fH = 24.83 kHz, fV = 56.40 Hz
P3: fH = 31.47 kHz, fV = 59.94 Hz
P4: fH = 48.36 kHz, fV = 60.00 Hz
P5: fH = 63.98 kHz, fV = 60.02 Hz
P6: fH = 75.00 kHz, fV = 60.00 Hz
P7: fH = 93.75 kHz, fV = 75.00 Hz
P8: fH = 106.25 kHz, fV = 85.00 Hz
P9: fH = 126.84 kHz, fV = 60.00 Hz
P10: fH = 145.00 kHz, fV = 60.00 Hz

The TIMER Menu

(Service/Expert modes)

The TIMER menu indicates the total operation time of the projector and that of each CRT.

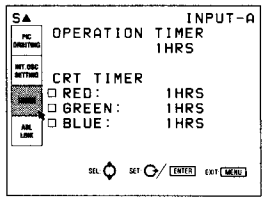

OPERATING TIMER

Indicates the total operation time (hours) of the projector.

CRT TIMER

Indicates the total operation time (hours) of the RED, GREEN and BLUE CRTs, respectively.

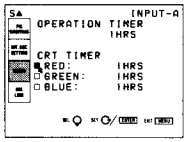

Using the MENU

The ABL (Automatic Brightness Limiter) LINK Menu

(Service/Expert modes)

The ABL LINK menu is used for the adjustment to make the brightness of the multi-screen uniform when connecting multiple projectors.

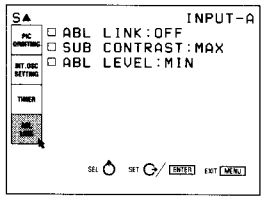

ABL LINK

When set to ON, the ABL (Automatic Brightness Limiter; to control the brightness of the picture when it is too high) functions on all projectors once the ABL functions on any projector.

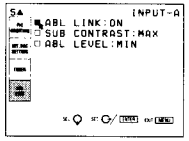

SUB CONTRAST

When ABL LINK is set to ON, adjust the brightness of each projector so that the brightness of all projectors looks the same.

ABL LEVEL

When ABL LINK is set to ON, adjust the brightness of each projector so that the brightness of all projectors looks the same.

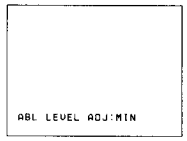

Test Patterns

In each adjustment mode, an appropriate test pattern appears. In addition, you can display other test patterns by pressing the PATTERN key.

Test Patterns

❶ CROSS HAIR

❷ HATCH (9 × 9)

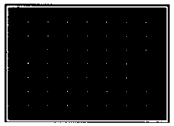

❸ HATCH INV (inverse) (9 × 9)

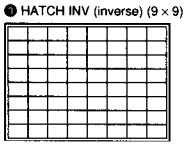

❹ HATCH (17 × 17)

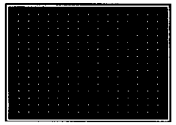

❺ DOT (9 × 9)

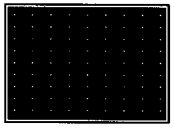

❻ H

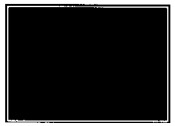

❼ H INV (inverse)

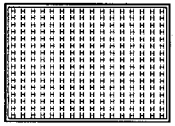

❽ ME

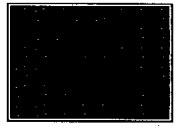

❾ ME INV (inverse)

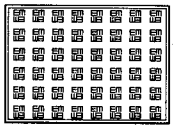

❿ ALL WHITE

⓫ WINDOW

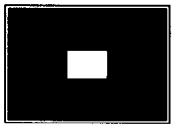

⓬ WINDOW&LINE

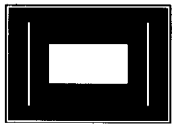

⓭ COLOR BAR

⓮ HATCH INV (inverse) (17 × 17) (for adjusting registration only)

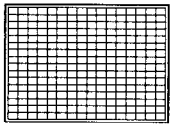

⓯ DOT (17 × 17) & HATCH (5 × 5) (for adjusting the magnetic focus and AQP/DQP only)

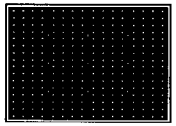

⓰ Sub-pattern (subsidiary adjustment pattern) (for adjusting SIZE, LIN, SKEW and BOW only)

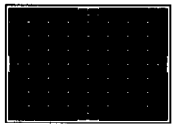

(continued)

Test Patterns

❹ HATCH (5 × 5)
(for adjusting KEY and PIN only)

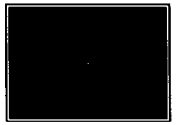

⓯ CROSS (9 × 9)
(for adjusting ZONE only)

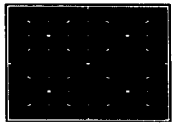

⓰ PLUGE (for adjusting BIAS only)

⓱ STAIR STEP (for adjusting GAIN only)

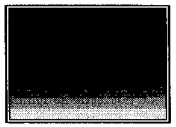

⓲ 10 IRE
(for adjusting BIAS only)

⓳ 100 IRE
(for adjusting GAIN and BIAS only)

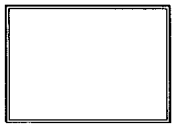

The patterns ❶ to ⓯ appear in numerical order when pressing the PATTERN key in service mode.
The patterns ⓰ to ㉒ appear in specified adjustment modes only.
The outmost bold line of each pattern in the illustration stands for the edge of the screen.

Test Patterns in Each Mode

The patterns cycle through the following order by pressing the PATTERN key.

Adjustment mode	Test pattern
CENT	CROSS HAIR → HATCH (9 × 9) → HATCH (17 × 17) → HATCH INV (17 × 17) → External signal / HATCH (17 × 17) → External signal → CROSS HAIR ...
SIZE LIN SKEW BOW	CROSS HAIR → Sub-pattern → HATCH (17 × 17) → HATCH INV (17 × 17) → External signal / HATCH (17 × 17) → External signal → CROSS HAIR ...
KEY PIN	HATCH (5 × 5) → HATCH (9 × 9) → HATCH (17 × 17) → HATCH INV (17 × 17) → External signal/ HATCH(17 × 17) → External signal → HATCH (9 × 9) ...
ZONE	HATCH (9 × 9) → CROSS HAIR (9 × 9) → HATCH (17 × 17) → HATCH INV (17 × 17) → External signal / HATCH (9 × 9) → External signal → HATCH (9 × 9) ...
MG FOCUS AQP/DQP	DOT (9 × 9) → DOT (17 × 17) & HATCH (5 × 5) → ME → ME INV → ALL WHITE → External signal → DOT (9 × 9) ...
GAIN	WINDOW → 100 IRE → STAIR STEP → External signal → WINDOW ...
BIAS	PLUGE → 10 IRE → STAIR STEP → External signal → PLUGE...
GAMMA	STAIR STEP → STAIR STEP → STAIR STEP → External signal → STAIR STEP...
BLKG	External signal / HATCH (17 × 17) ⟷ External signal
RGB SIZE RGB SHIFT	External signal ⟷ External signal / HATCH (17 × 17)
Service mode	Test patterns ❶ to ⓯ shown on page 75.
User mode	CROSS HAIR → HATCH (9 × 9) → ME → COLOR BAR → CROSS HAIR ...

Warm-up before adjustment

Before adjusting the registration, make sure to turn on the projector and allow it to warm up for 20 minutes.
The projector is designed with a warm-up period of about 20 minutes after turning on the power. During this period, it displays a white screen with the message shown below. 35 seconds after the warm-up starts, the message will disappear temporarily and will appear subsequently for 5 seconds every 30 seconds.

```
For optimum
performance,
white screen will
remain for
20min
For immediate use
push [MENU] key.
```

Press the MENU key to cancel the warm-up, if you wish to see the picture immediately.
You may also set the projector for a shorter, longer or no warm-up period.

For details, see "ALL WHITE MODE" in the SERVICE SETTING 2 menu on page 70.

Adjustments

Adjustment Procedure

Before starting the adjustments
- Make sure that the projector is installed correctly and the CRT conversion angle is adjusted correctly.
- Set the projector to the service mode. *(page 43)*

1 Lens focus and scheimpflug (angle of the CRT) adjustment (pages 81 to 86)

① **Reset all the data to the factory preset data (if necessary).** *(page 138)*

↓

② **Adjust the registration roughly (if necessary).** *(page 93)*

↓

③ **Select the internal oscillation pattern (P5, fH=63.98 kHz).** *(page 81)*

↓

④ **Display the H-pattern or ME-pattern.** *(page 81)*

↓

⑤ **Adjust the green lens focus and scheimpflug.** *(page 81)*
1. Adjust the green lens focus.
2. Adjust the green magnetic focus and AQP/DQP roughly (if necessary).
3. Adjust the green scheimpflug.
4. Adjust the green lens focus precisely.

↓

⑥ **Adjust the red lens focus and scheimpflug.** *(page 85)*
1. Adjust the red lens focus.
2. Adjust the red magnetic focus and AQP/DQP roughly (if necessary).
3. Adjust the red scheimpflug.
4. Adjust the red lens focus precisely.

↓

(continued)

⑦ **Adjust the blue lens focus and scheimpflug.** *(page 86)*
1. Adjust the blue lens focus.
2. Adjust the blue magnetic focus and AQP/DQP roughly (if necessary).
3. Adjust the blue scheimpflug.
4. Adjust the blue lens focus precisely.

2 Magnetic focus adjustment (pages 87 to 91)

① **Adjust the green magnetic focus, AQP/DQP and AHP/DHP.** *(page 87)*
1. Adjust the green magnetic focus, AQP/DQP and AHP/DHP in the center of the screen.
2. Adjust the green AHP/DHP in the peripheral area of the screen (in expert mode only).
3. Adjust the green magnetic focus, and AQP/DQP in the peripheral area of the screen.

↓

② **Adjust the red magnetic focus, AQP/DQP and AHP/DHP.** *(page 90)*

↓

③ **Adjust the blue magnetic focus, AQP/DQP and AHP/DHP.** *(page 91)*

↓

④ **Adjust the uniformity of all-white mode screen.** *(page 91).*

3 Saving the adjusted magnetic focus data as the standard data (page 92)

4 Registration adjustment (pages 93 to 120)

① **Mark the center of the screen.** *(page 93)*

↓

② **Select NO INPUT mode.** *(page 93)*

↓

③ **Select the internal oscillation pattern to be used for the registration adjustment.** *(page 93)*

↓

④ **Reset the registration data to the factory preset levels. (Only if the adjustment data has been modified before.)** *(page 138)*

↓

⑤ **Adjust the green registration.** *(pages 95 to 107)*
1. Centering adjustment
2. Size and linearity adjustment
3. Skew and bow adjustment
4. Keystone and pincushion adjustment in the whole screen
5. Keystone and pincushion adjustment in the peripheral area of the screen
6. Zone adjustment (if necessary)

↓

(continued)

Adjustment Procedure

⑥ **Adjust the red registration.** *(pages 108 to 118)*
1. Centering adjustment
2. Size and linearity adjustment
3. Skew and bow adjustment
4. Keystone and pincushion adjustment
5. Zone adjustment (if necessary)

↓

⑦ **Adjust the blue registration.** *(pages 119 to 120)*
1. Centering adjustment
2. Size and linearity adjustment
3. Skew and bow adjustment
4. Keystone and pincushion adjustment
5. Zone adjustment (if necessary)

5 Saving the adjusted registration data as the standard data (page 121)

6 Fine adjustment for each input signal (pages 122 to 128)

① **Select the input signal.** *(page 122)*

↓

② **Fine adjustment of the magnetic focus, AQP/DQP (if necessary)** *(page 122)*

↓

③ **Fine adjustment of the registration (if necessary)** *(page 122)*

↓

④ **Adjustment of the picture size** *(page 123)*

↓

⑤ **Adjustment of the picture shift** *(page 123)*

↓

⑥ **Blanking adjustment** *(page 124)*

↓

⑦ **White balance adjustment (if necessary)** *(page 125)*

↓

⑧ **Adjustments 1 to 7 for other input signal**

7 Picture quality adjustment (page 129)

Adjusting the Lens Focus and Scheimpflug

Preparation

1 Reset all the data to the factory preset data.
For details, see "Resetting the Data" on page 138.

2 Adjust the registration very roughly, if necessary.
When the picture is larger than the screen or is projected from the rear of the screen, roughly adjust the registration.
For details, see "Adjusting the Registration" on page 93.

3 Display the INT. OSC SETTING menu, set INT. OSC MODE to ON and set INT. OSC. PATTERN to P5 (fH = 63.98 kHz).
For details, see "INT. OSC menu" on page 72.

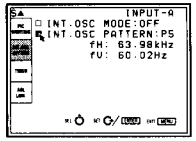

4 Reset the CONTRAST and BRIGHT levels.
The CONTR level resets to 80 by pressing the RESET key after pressing the PICTURE CONTROL CONTR key.
The BRIGHT level resets to 50 by pressing the RESET key after pressing the PICTURE CONTROL BRIGHT key.
For details, see "Adjusting the Picture Quality" on page 129.

Adjusting the Green Lens Focus and Scheimpflug

1 Adjusting the green lens focus

1 Reset the centering adjustment data of the green signal.
For details, see "Resetting the Data" on page 138.

2 Press the NORMAL key on the remote commander to turn off the test pattern once, then press the PATTERN key on the remote commander until the H-pattern or ME-pattern appears.

Example: H-pattern

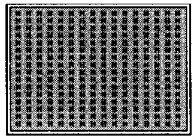

Adjusting the Lens Focus and Scheimpflug

3 Press the CUT OFF R and B keys to display the green signal only.

4 Open the upper cover.
For opening the cover, see page 18.

5 Adjust the center-focus.
Loosen the G1 screw, slide it so that the letters H at the center of the screen are in focus, and then tighten the screw.

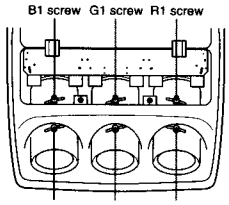

6 Adjust the corner-focus.
Loosen the G2 screw, slide it so that the letters H at all four corners of the screen (white areas illustrated below) are in focus, and then tighten the screw.
Repeat steps **5** and **6** until the green focus adjustment is completed.
(If the corner-focus cannot be adjusted completely, adjust it again after finishing the Scheimpflug adjustment of the green lens.)

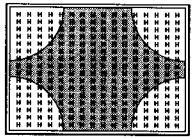

Hint for the lens focus adjustment
The letter "H" is made up of dots. Adjust the focus so that dots of the letter "H" can be clearly seen as illustrated below.
Placing a white paper over the front of the screen will make it easier to see the dots.

2 Adjusting the green magnetic focus and AQP/DQP roughly, if necessary.

The magnetic focus and AQP/DQP will be adjusted precisely after the lens focus and scheimpflug adjustments. Adjust the green magnetic focus and AQP/DQP roughly at this stage to make the later adjustments easily.
For details of the magnetic focus and AQP/DQP adjustments, see page 87.

3 Adjusting the green scheimpflug

After adjusting the green lens focus, adjust the green scheimpflug (angle of the green CRT) so that the upper and lower parts, and the left and right parts of the screen are equally in focus.

1 Open the upper cover.
For how to open the upper cover, see page 18.

2 Place a white paper over the front of the screen. Note whether the focal planes on the upper, lower, left and right parts of the screen appear to be leaning forward or backward.

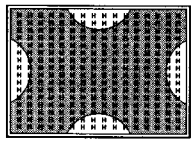

3 Adjust the focus on the upper and lower parts with the V screw on the green CRT using the supplied tool.
The supplied tool can rotate the screw in one direction only. To rotate the screw in the reverse direction, turn the tool upside down.

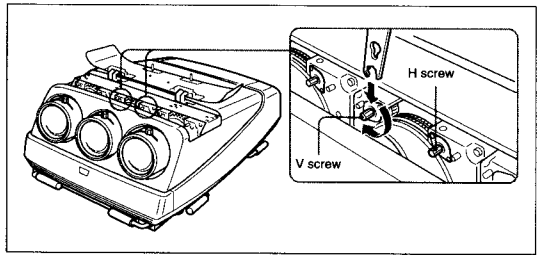

Caution
Do not turn the tool forcibly when the screw has fully rotated. Otherwise, the tool may slip out and injure your hand.

(continued)

Adjusting the Lens Focus and Scheimpflug

Note

Normally, adjust only the V screw for the green CRT. Adjusting the H screw is required only for non-standard installation.
If the left and right parts of the screen are not in focus, make sure that the projector and the screen are installed correctly.
For the red and blue scheimpflug, adjust both the H and V screws.

By turning the V screw, the CRT moves vertically to adjust the vertical tilt of the focal plane.

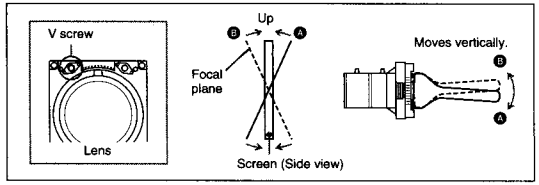

By turning the H screw, the CRT moves horizontally to adjust the horizontal tilt of the focal plane.

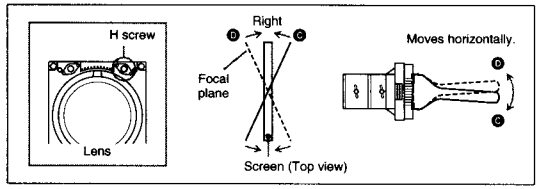

Repeat the above process until the upper and lower parts and the right and left parts of the screen are in focus.

4 Adjusting the green lens focus precisely

After adjusting the green scheimpflug, readjust the green lens focus until the perfect focus is obtained.
For the procedure of the adjustment, see "1 Adjusting the green lens focus" on page 81.

Proceed to the red lens focus and scheimpflug adjustments.

Adjusting the Red Lens Focus and Scheimpflug

1 Adjusting the red lens focus

1. Reset the centering adjustment data of the red signal.
   For details, see "Resetting the Data" on page 138.
2. Press the PATTERN key until the H-pattern or ME-pattern is displayed.
3. Press the CUT OFF G and B keys to display the red signal only.
4. Loosen the R1 screw, slide it so that the letters H at the center of the screen are in focus, then tighten the screw.
   For details, see "Adjusting the green lens focus" on page 81.
5. Loosen the R2 screw, slide it so that the letters H at all four corners of the screen are in focus, then tighten the screw.
   Repeat steps **4** and **5** until the red focus adjustment is completed.

2 Adjusting the red magnetic focus and AQP/DQP roughly, if necessary.

The magnetic focus and AQP/DQP will be adjusted precisely after the lens focus and scheimpflug adjustments. Adjust the red magnetic focus and AQP/DQP roughly at this stage to make the later adjustments easily.
For details of the magnetic focus and AQP/DQP adjustments, see page 87.

3 Adjusting the red scheimpflug

After adjusting the red lens focus, adjust the red scheimpflug (angle of the red CRT).
Check the tilt of the focal planes at the upper, lower, left and right parts of the screen, then adjust the focus with the H and V screws on the red CRT.
For details, see "Adjusting the green scheimpflug" on page 83.

4 Adjusting the red lens focus precisely

After adjusting the red scheimpflug, readjust the red lens focus until the perfect focus is obtained.
For the procedure of the adjustment, see "1 Adjusting the green lens focus" on page 81.

Proceed to adjust the blue lens focus and scheimpflug.

Adjusting the Lens Focus and Scheimpflug

Adjusting the Blue Lens Focus and Scheimpflug

1 Adjusting the blue lens focus

1 Reset the centering adjustment data of the blue signal.
For details, see "Resetting the Data" on page 138.

2 Press the PATTERN key until the H-pattern or ME-pattern is displayed.

3 Press the CUT OFF G and R keys to display the blue signal only.

4 Loosen the B1 screw, slide it so that the letters H at the center of the screen are in focus, then tighten the screw.
For details, see "Adjusting the green lens focus" on page 81.

5 Loosen the B2 screw, slide it so that the letters H at all four corners of the screen are in focus, then tighten the screw.
Repeat steps **4** and **5** until the blue focus adjustment is completed.

2 Adjusting the blue magnetic focus and AQP/DQP roughly, if necessary

The magnetic focus and AQP/DQP will be adjusted precisely after the lens focus and scheimpflug adjustments. Adjust the blue magnetic focus and AQP/DQP roughly at this stage to make the later adjustments easily.
For details of the magnetic focus and AQP/DQP adjustments, see page 87.

3 Adjusting the blue scheimpflug

After adjusting the blue lens focus, adjust the blue scheimpflug (angle of the blue CRT).
Check the tilt of the focal planes at the upper, lower, left and right parts of the screen, then adjust the focus with the H and V screws on the blue CRT.
For details, see "Adjusting the green scheimpflug" on page 83.

4 Adjusting the blue lens focus precisely

After adjusting the blue scheimpflug, readjust the blue lens focus until the perfect focus is obtained.
For the procedure of the adjustment, see "1 Adjusting the green lens focus" on page 81.

Proceed to adjust the green magnetic focus and AQP/DQP.

Adjusting the Magnetic Focus

After adjusting the lens focus and scheimpflug, adjust the magnetic focus, AQP (Axis Quadrupole)/DQP (Diagonal Quadrupole) and AHP (Axis Hexapole)/DHP (Diagonal Hexapole).

What is the AQP/DQP adjustment?

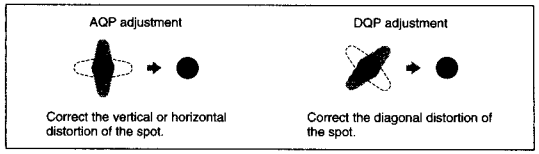

What is the AHP/DHP adjustment?

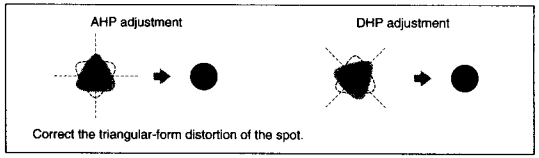

1 Adjusting the green magnetic focus, AQP/DQP and AHP/DHP

1 Press the CUT OFF R and B keys to display the green signal only.

2 Press the MG FOCUS key.
The DOT pattern (9 × 9) appears on the screen, and a square for adjusting focus is displayed on the center of the screen. The adjustment mode, adjustment position No., and adjustment items overlap with the DOT pattern.

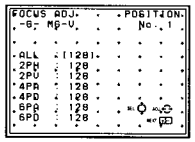

3 Adjust the focus at the center (position No.1) of the screen.
Press the ↓ or ↑ key to select the item (by moving [ ] to the item), and press the ← or → key to adjust the data.
① Press the ← or → key to set ALL to +40 so that flare appears on the screen.
② Press the ↓ or ↑ key to select 2PH, then press the ← or → key so that the core of a spot is located at the horizontal center of the flare.
③ Select 2PV, then adjust so that the core of a spot is located at the vertical center of the flare.

(continued)

Adjusting the Magnetic Focus

④ Repeat steps ② and ③ so that the core of a spot is located at the center of the flare.
⑤ Select ALL again, then set the value to –80 so that the spot is focused.
⑥ Select 4PA, then correct the vertical and horizontal distortion of the spot.
⑦ Select 4PD, then correct the diagonal distortion of the spot.
⑧ Select 6PA and correct the vertical triangular-form distortion of the spot.
⑨ Select 6PD and correct the diagonal triangular-form distortion of the spot.
⑩ Repeat steps ⑥ to ⑨ so that the spot becomes a correct circle.
⑪ Select ALL, display the ME-pattern by pressing the PATTERN key, and adjust so that the spot is in focus.

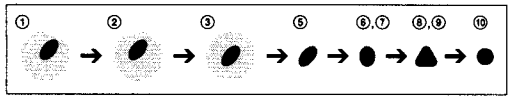

4 Adjust the AHP/DHP at corners of the screen. (in expert mode only)
For details, see "AHP/DHP adjustment" on page 89.

5 Press the PATTERN key repeatedly to display the ME-pattern.

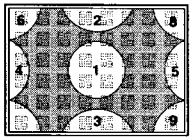

6 Press the POSITION + key once to enter the focus adjustment mode for the upper parts (position No.2).
When you press the POSITION + key, the part to be adjusted cycles through the order as illustrated on the left. The position number is displayed at the upper right corner.
If you press the POSITION – key, the part cycles through the reverse order.

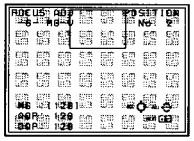

7 Adjust the focus and AQP/DQP for the upper part of the screen (position No.2).
① Press the ← or → key so that the upper part of the screen is in focus.
② Select AQP with the ↓ or ↑ key, and press the ← or → key so that the letters ME are clearly visible. (AQP adjustment)
③ Select DQP with the ↓ or ↑ key, and press the ← or → key so that the letters ME are clearly visible. (DQP adjustment)
④ Repeat steps ① to ③ until the letters ME are in best focus.

8 Perform the magnetic focus, AQP and DQP for every part of the screen (positions No.3 to No.9) in numeric order.
① Press the POSITION + key to select the part to be adjusted.
② Press the ↓ or ↑ key to select the adjustment item.
③ Press the ← or → key to adjust.
Repeat steps ② and ③ for each adjustment item.

Proceed to adjust the red magnetic focus *(page 90)* **if the green adjustments are completed.**
If the green adjustments are not complete, repeat from the green lens focus again.

AHP/DHP adjustment (in expert mode only)

To adjust the spot at the corner of the screen more precisely, the unit is provided with the AHP (Axis Hexapole)/DHP (Diagonal Hexapole) adjustment in expert mode only. The AHP/DHP adjustment corrects the astigmatic distortion which cannot be corrected with the AQP/DQP adjustment.
Perform the AHP/DHP adjustment before adjusting the magnetic focus and AQP/DQP adjustment at the corners of the screen.

What is the AHP/DHP adjustment?

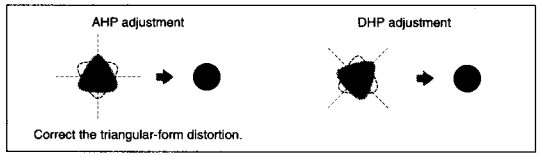

1 Press the NORMAL key on the remote commander to turn off the test pattern.

2 Press the keys in the following order:
ENTER → ENTER → ← → → → ENTER
Press the keys one after another within 2 seconds.
The following display appears.

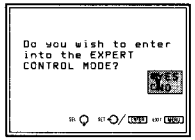

3 Press the ↓ or ↑ key to select YES, then press the ENTER key.
The unit enters the expert mode, and "E" appears at the top-left of the screen when the menu is displayed.

4 Press the FUNCTION key once.
"Spot Shape" is displayed on the screen and the spots become large for easier adjustment.

(continued)

Adjusting the Magnetic Focus

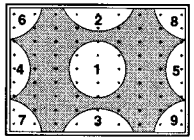

5 Press the POSITION + key once to enter the focus adjustment mode for the upper parts (position No. 2).
When you press the POSITION + key, the part to be adjusted cycles through the order as illustrated on the left. The position number is displayed at the upper right corner.
If you press the POSITION – key, the part cycles through the reverse order.

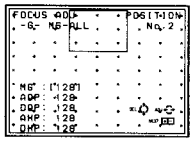

6 Adjust the AQP, DQP, AHP and DHP for position No. 2.
Press the ↓ or ↑ key to select the adjustment item and press the ← or → key to correct the distortion of the spot.

7 Press the POSITION + or – key to select the adjustment position and repeat steps **5** and **6** for each position.
Adjust positions No.3 to No.9 in order.

8 Press the FUNCTION key once to exit from the Spot Shape mode.

9 Display the ME-pattern with the PATTERN key.

10 Press the POSITION + or – key to select the adjustment position No. 2 to No. 9 and adjust MG, AQP and DQP so that the letters ME are clearly visible for every part of the screen.

Note
Do not adjust AHP and DHP for positions No. 2 to No. 9.

11 Press the CUT OFF G and B keys to display the red signal only, and adjust AQP, DQP, AHP and DHP in the same manner as the green signal.

12 Press the CUT OFF G and R keys to display the blue signal only, and adjust AQP, DQP, AHP and DHP in the same manner as the green signal.

2 Adjusting the red magnetic focus, AQP/DQP and AHP/DHP

Press the CUT OFF G and B keys to display the red signal only. Then adjust the red magnetic focus, AQP/DQP and AHP/DHP. To adjust them, perform the same procedure as for the green signal.
For details, see "Adjusting the green magnetic focus, AQP/DQP and AHP/DHP" on pages 87 to 90.

Proceed to adjust the blue magnetic focus if every part of the screen for red signal is completely in focus.

Note
When the red magnetic focus adjustment mode is canceled, the red signal is slightly defocused. This is because the offset function activates so that the optimum picture is projected. (when NORMAL DEFOCUS MODE is ON in SERVICE SETTING 1 menu)

3 Adjusting the blue magnetic focus, AQP/DQP and AHP/DHP

Press the CUT OFF G and R keys to display the blue signal only. Then adjust the magnetic focus, AQP/DQP and AHP/DHP. To adjust them, perform the same procedure as for the green signal.
For details, see "Adjusting the green magnetic focus, AQP/DQP and AHP/DHP" on pages 87 to 90.

If every part of the screen for blue signal is completedy in focus, proceed to adjust the uniformity of all white mode screen.

Note
When the blue magnetic focus adjustment mode is canceled, the blue signal is slightly defocused. This is because the offset function activates so that the optimum picture is projected. (when NORMAL DEFOCUS MODE is ON in SERVICE SETTING 1 menu)

4 Adjusting the uniformity of all-white mode screen

After completing the green, red and blue focus adjustments, check the uniformity of all-white mode screen.

1 Press the MG FOCUS, B ADJ and MG FOCUS keys to enter the defocused mode.
DEFOCUS is displayed on the screen and the blue signal is slightly defocused.

2 Press the PATTERN key until the all-white screen appears.

3 If the all-white screen does not seem uniform, adjust the blue magnetic focus for every part of the screen so that the screen becomes uniform white.

Proceed to save the adjusted magnetic focus data as standard data, if the uniformity of the all-white mode screen is adjusted completely.

Adjusting the Magnetic Focus

Saving the Standard Magnetic Focus Data

After adjusting all the magnetic focus data, save the adjusted data as the standard data for the projector. The projector automatically changes the magnetic focus data of position No. 1 in every input memory according to the standard data.

1 Hold down the MEMORY key for more than 5 seconds.
"MEMORY DATA is saving !" is displayed while the projector saves the magnetic focus data. When saving is completed, the following display appears.

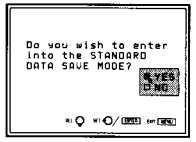

2 Press the ↓ or ↑ key to select YES, then press the ENTER key.
If you select YES, the STANDARD DATA SAVE MODE display appears.

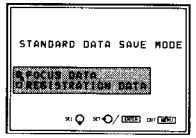

If you select NO, the original display is resumed.

3 Press the ↓ or ↑ key to select FOCUS DATA, then press the ENTER key.
The magnetic focus data of position No. 1 in all the input memory are changed according to the standard data saved in step **1**.

Notes

- No keys function while the data is being saved.
- If the standard data save is performed, the magnetic focus data of position No. 1 in every input memory will be changed into the standard data. If necessary, readjust the magnetic focus for each input signal.

Adjusting the Registration

Preparation

1 Mark the center of the screen.
Measure the height and width of the screen to determine the center.
Marking five points with white tape, as illustrated below, will help you adjust registration.

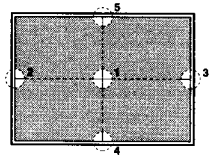

2 Set the remote commander to the service mode.
For details, see "Preparation of the Remote Commander" on page 42.

3 Press one of the INPUT SELECT keys corresponding to the input that is not connected to a signal so that "NO INPUT" appears.
Or, set the SWITCHER/VIDEO MEMORY/INDEX select switch to SWITCHER and then press the number key from 1 to 8, corresponding to the input that is not connected to a signal.

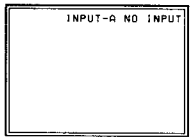

4 Display the INT. OSC SETTING menu, set INT. OSC MODE to ON, then select the frequency to be used for the adjustment on INT. OSC PATTERN.
For details, see "The INT. OSC SETTING Menu" on page 72.

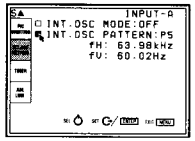

5 Reset the standard data to the factory preset level.
(Only when you have adjusted the registration and have saved the adjustment data.)
For details, see "Resetting the Data" on page 138.

(continued)

Adjusting the Registration

Notes

- The center of the screen and the center of the CROSS HAIR pattern can be aligned by performing the centering adjustment.
  For details, see "Green CENT (centering) adjustment" on page 95.
- When the optical axis angle is smaller, the HATCH pattern becomes trapezoidal. Perform the KEY (keystone) adjustment to correct the distortion.
  For details, see "Green KEY and PIN adjustments for the whole screen" on page 100.

Keys for Adjusting

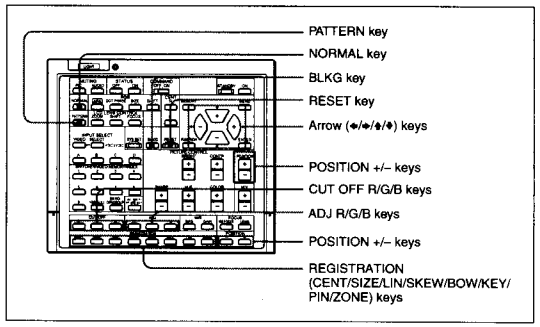

Indications on the REGISTRATION keys and the adjustment items

Indicated on the commander	Adjustment items
CENT	Centering
SIZE	Size
LIN	Linearity
SKEW	Skew
BOW	Bow
KEY	Keystone
PIN	Pincushion
ZONE	Zone

Adjusting the Green Registration

Be sure to adjust the green registration first.

1 Green CENT (centering) adjustment

Adjust so that the center of the test pattern is aligned with the center of the screen.

1 Press the CENT key.
The CROSS HAIR pattern and the cursor appear.

2 Press the ADJ G key.

3 Press the CUT OFF R and B keys to display green only.

4 Reset the FINE centering data.
See "Resetting the Data" on page 138.

5 Press the arrow keys to align the center of the CROSS HAIR pattern with the center of the screen.

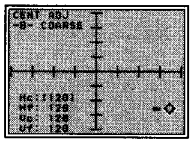

6 If the test pattern is not aligned with the center, press the CENT key again.
The projector enters the FINE centering mode for fine adjustment. Each time you press the CENT key, the COARSE mode and FINE mode are selected alternately, and you can use the two modes appropriately. The adjustment data is stored for each mode separately. While you hold down the arrow key in the FINE mode, "f" is displayed around the adjustment position.

7 Press the arrow keys to align the center precisely.

Notes

- If the test pattern is off-centered by a large amount, check if the projector is installed or adjusted correctly.
- If the upper, lower, left or right part of the screen is de-focused, check if the scheimpflug is adjusted correctly.
  For details, see "Adjusting the green scheimpflug" on page 83.

Adjusting the Registration

2 Green SIZE and LIN (linearity) adjustment

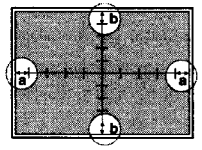

Adjust the picture size with respect to the screen, and the picture's up, down, left and right balance.

1 Press the LIN key.
The CROSS HAIR pattern appears.
You can also change to the 9 × 9 HATCH pattern by pressing the PATTERN key.

2 Press the ADJ G key.
Pay attention only to the encircled portions illustrated on the left.

3 Reset the FINE linearity data.
See "Resetting the Data" on page 138.

4 Adjust with the ← and → keys until parts (ⓐ) (distances from the right and left ends of the screen to the first vertical lines) are of equal length.

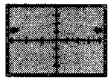

← : The left and right vertical lines are shifted to the left while the vertical center line remains unmoved.

→ : The left and right vertical lines are shifted to the right while the vertical center line remains unmoved.

5 Press the SIZE key.

6 Reset the FINE size data.
See "Resetting the Data" on page 138.

7 Adjust with the ← and → keys until parts (ⓐ) on the left and right are 15 to 20 mm long.

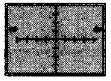

← : The horizontal scale is reduced.

→ : The horizontal scale is expanded.

8 If they are not aligned, press the LIN key or the SIZE key and repeat the adjustment by pressing the ← or → key.
Each time you press the LINE or SIZE key, the COARSE mode and FINE mode are selected alternately, and you can use the two modes appropriately. The adjustment data is stored for each mode separately.
While you hold down the arrow key in the FINE mode, "f" is displayed around the adjustment position.

9 If the CROSS HAIR pattern is off-centered on the screen, adjust the centering again and repeat steps **1** to **8** for the horizontal scale adjustment.
For details of the centering adjustment, see "Green CENT *(centering) adjustment" on page 95.*

10 Press the LIN key.

11 Adjust with the ↑ and ↓ keys until parts (ⓑ *on page 96*) (distances from the top and bottom ends of the screen to the first horizontal lines) are of equal length.

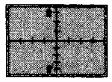

↑ : The upper and lower horizontal lines are shifted upward while the horizontal center line remains unmoved.

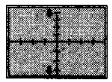

↓ : The upper and lower horizontal lines are shifted downward while the horizontal center line remains unmoved.

12 Press the SIZE key.

13 Adjust with the ↑ and ↓ keys until parts (ⓑ) at the top and bottom are about 15 to 20 mm long.

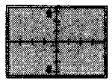

↑ : The vertical scale is expanded.

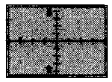

↓ : The vertical scale is reduced.

14 If they are not aligned, repeat steps **10** to **13**.

15 If the CROSS HAIR pattern is off-centered on the screen, adjust the centering again and then repeat steps **10** to **14** for the vertical scale adjustment.
For details of the centering adjustment, see "Green CENT (centering) adjustment" on page 95.

Adjusting the Registration

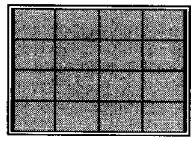

B Vertical line adjustment

If the picture's borders are as shown by the dotted line in the illustrations below, adjust them with the corresponding arrow key so that they are parallel (bold lines illustrated on the left).

1 Press the KEY key.
The HATCH pattern appears.

2 Adjust the distortion as illustrated below with the ← and → keys.
In position No. 1 of green adjustment, the green, red and blue lines move together by pressing the ← or → key.

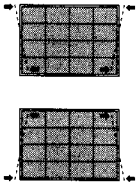

← : The lines spread apart at the bottom and come together at the top while the center remains unmoved.

→ : The lines spread apart at the top and come together at the bottom while the center remains unmoved.

3 Press the PIN key.

4 Adjust the distortion as illustrated below with the ← and → keys.
In position No. 1 of green adjustment, the green, red and blue lines move together by pressing the ← or → key.

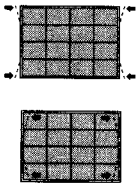

← : The ends of the left and right side lines come together while the center remains unmoved.

→ : The ends of the left and right lines spread apart while the center remains unmoved.

5 Repeat steps **1** to **4** until the vertical lines become parallel to the screen edges.

5 Green KEY (keystone) and PIN (pincushion) adjustments on the peripheral area of the screen

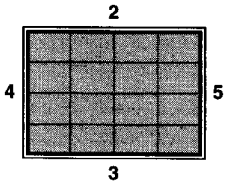

Separately adjust the distortion at the top, bottom, right end and left end of the screen which may still remain even after the KEY and PIN adjustments for the whole screen.

A Horizontal line adjustment at the top

1 Press the KEY key and press the POSITION + key once.
The projector enters the upper keystone adjustment mode (POSITION No. 2).
When you press the POSITION + key, the adjustment position changes in the numerical order **2** to **5** as illustrated on the left. The selected position number appears at the upper right corner of the screen. When you press the POSITION – key, the position number is selected in the reverse order.

2 Adjust the distortion of the horizontal line at the top with the ↓ and ↑ keys.
Only the green line moves.

↑ : The horizontal line rotates counter-clockwise, rotating around the center.

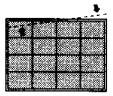

↓ : The horizontal line rotates clockwise, rotating around the center.

3 Press the PIN key and press the POSITION + key once.
The projector enters the upper pincushion adjustment mode (POSITION No. 2).
When you press the POSITION + key, the adjustment position changes in the numerical order **2** to **5** as illustrated on the left. The selected position number appears at the upper right corner of the screen. When you press the POSITION – key, the position number is selected in the reverse order.

(continued)

Adjusting the Registration

4 Adjust the distortion of the horizontal line on the top with the ↓ and ↑ keys.
Only the green line moves.

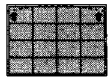

↑ : The left and right ends of the horizontal line curve upward while the center remains unchanged.

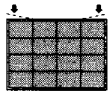

↓ : The left and right ends of the horizontal line curve downward while the center remains unchanged.

5 Repeat the adjustment with the KEY or PIN key and the ↓ and ↑ keys until the horizontal line on the top becomes parallel to the screen edge.

B Horizontal line adjustment at the bottom

1 Press the KEY key and press the POSITION + key once.
The projector enters the lower keystone adjustment mode (POSITION No. 3).

2 Adjust the distortion of the horizontal line at the bottom with the ↓ and ↑ keys.
↑: The horizontal line rotates counter-clockwise, rotating around the center.
↓: The horizontal line rotates clockwise, rotating around the center.

3 Press the PIN key and press the POSITION + key once.
The projector enters the lower pincushion adjustment mode (POSITION No. 3).

4 Adjust the distortion of the horizontal line at the bottom with the ↓ and ↑ keys.
↑: The left and right ends of the horizontal line curve upward while the center remains unchanged.
↓: The left and right ends of the horizontal line curve downward while the center remains unchanged.

5 Repeat the adjustment with the KEY or PIN key and the ↓ and ↑ keys until the horizontal line at the bottom becomes parallel to the screen edge.

C Vertical line adjustment at the left side

1 Press the KEY key and press the POSITION + key once.
The projector enters the left keystone adjustment mode (POSITION No. 4).

2 Adjust the distortion of the vertical line at the left side with the ← and → keys.

← :The vertical line rotates counter-clockwise, rotating around the center.

→ :The vertical line rotates clockwise, rotating around the center.

3 Press the PIN key and press the POSITION + key once.
The projector enters the left pincushion adjustment mode (POSITION No. 4).

4 Adjust the distortion of the vertical line at the left side with the ← and → keys.

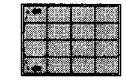

← :The upper and lower ends of the vertical line curve towards the left while the center remains unchanged.

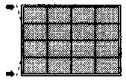

→ :The upper and lower ends of the vertical line curve towards the right while the center remains unchanged.

5 Repeat the adjustment with the KEY or PIN key and the ← and → keys until the vertical line at the left side becomes parallel to the screen edge.

Adjusting the Registration

D Vertical line adjustment at the right side

1 Press the KEY key and press the POSITION + key once.
The projector enters the right keystone adjustment mode (POSITION No. 5).

2 Adjust the distortion of the vertical line at the right side with the ◆ and ◆ keys.
◆: The vertical line rotates counter-clockwise, rotating around the center.
◆: The vertical line rotates clockwise, rotating around the center.

3 Press the PIN key and press the POSITION + key once.
The projector enters the right pincushion adjustment mode (POSITION No. 5).

4 Adjust the distortion of the vertical line at the right side with the ◆ and ◆ keys.
◆: The upper and lower ends of the vertical line curve towards the left while the center remains unchanged.
◆: The upper and lower ends of the vertical line curve towards the right while the center remains unchanged.

5 Repeat the adjustment with the KEY or PIN key and the ◆ and ◆ keys until the vertical line at the right side becomes parallel to the screen edge.

6 Green ZONE adjustment

When adjusting the green registration, do not greatly change the ZONE adjustment. If you change the green ZONE in the large range considerably, the adjustment for red and blue may be difficult.
If you need the green ZONE adjustment, refer to "Red ZONE adjustment" on page 117.

The green registration adjustment is all completed.
Proceed to the adjustment for the red signal.

Adjusting the Registration

Adjusting the Red Registration

Adjust the red signal so that it converges with the green signal and is seen as yellow.

Note

When you have adjusted the red registration data and have saved the adjustment data, reset the red centering to the factory preset level.
For resetting, see page 138.

7 Red CENT (centering) adjustment

Adjust so that the center of the red CROSS HAIR pattern is aligned with that of the green CROSS HAIR pattern.

1. Press the CENT key.
   The CROSS HAIR pattern and the cursor appear.
2. Press the ADJ R key.
3. Press the CUT OFF B key to display green and red.
4. Reset the FINE centering data.
   See "Resetting the Data" on page 138.
5. Press the arrow keys to align the center of the red CROSS HAIR pattern with that of the green pattern.
6. If the centers do not converge, press the CENT key again.
   The projector enters the FINE centering mode for fine adjustment. Each time you press the CENT key, the COARSE mode and FINE mode are selected alternately, and you can use the two modes appropriately. The adjustment data is stored for each mode separately. While you hold down the arrow key in the FINE mode, "f" is displayed around the adjustment position.
7. Press the arrow keys to align the center precisely.

Notes

- If the red vertical line is not aligned with that of the green pattern, adjust the red CRT conversion angle again.
  For details, see "Adjusting the CRT Conversion Angle" on page 22.
- If the upper, lower, left or right part of the screen is de-focused, adjust the red scheimpflug again.
  For details, see "Adjusting the green scheimpflug" on page 83.

8 Red SIZE and LIN (linearity) adjustments

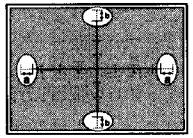

1. Press the LIN key.
   The CROSS HAIR pattern appears.
   You can also change to the 9 × 9 HATCH pattern by pressing the PATTERN key.
2. Press the ADJ R key.
   Pay attention only to the encircled portions in the illustration on the left.
3. Reset the FINE linearity data.
   See "Resetting the Data" on page 138.
4. Adjust with the ← and → keys until the parts (ⓐ) (distances between the red and green lines) on the left and right are of equal length.
   ←: The left and right vertical lines are shifted to the left while the vertical center line remains unmoved.
   →: The left and right vertical lines are shifted to the right while the vertical center line remains unmoved.
5. Press the SIZE key.
6. Reset the FINE size data.
   See "Resetting the Data" on page 138.
7. Adjust with the ← and → keys so that the red and green lines in the right and left encircled portions converge.
   ←: The horizontal scale is reduced.
   →: The horizontal scale is expanded.
8. If the lines do not converge, press the LIN or SIZE key and repeat the adjustment by pressing the ← or → key.
   Each time you press the LINE or SIZE key, the COARSE mode and FINE mode are selected alternately, and you can use the two modes appropriately. The adjustment data is stored for each mode separately. While you hold down the arrow key in the FINE mode, "f" is displayed around the adjustment position.
9. If the CROSS HAIR pattern is off-centered on the screen, adjust the centering again and repeat steps **1** to **8** for the horizontal scale adjustment.
   For details of the centering adjustment, see "Red CENT (centering) adjustment" on page 108.
10. Press the LIN key.

(continued)

Adjusting the Registration

11 Adjust with the ↑ and ↓ keys until parts (ⓑ) (distances between the red and green lines) at the top and bottom are of equal length.
- ↑: The upper and lower horizontal lines are shifted upward while the horizontal center line remains unmoved.
- ↓: The upper and lower horizontal lines are shifted downward while the horizontal center line remains unmoved.

12 Press the SIZE key.

13 Adjust with the ↑ and ↓ keys so that the red and green lines at the top and bottom encircled portions converge.
- ↑: The vertical scale is expanded.
- ↓: The vertical scale is reduced.

14 If the lines do not converge, repeat steps **10** to **13**.

15 If the CROSS HAIR pattern is off-centered on the screen, adjust the centering again and repeat steps **10** to **14** for the vertical scale adjustment.
For details of the centering adjustment, see "Red CENT (centering) adjustment" on page 108.

9 Red SKEW and BOW adjustments

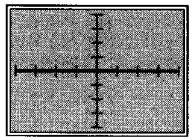

A Horizontal line adjustment
If the horizontal line of the picture is as shown by the dotted line in the illustrations below, adjust it with the corresponding arrow key so that it is perpendicular to the vertical line (bold line illustrated on the left).

1 Press the BOW key.
The CROSS HAIR pattern appears.
You can also change to the 9 × 9 HATCH pattern by pressing the PATTERN key.

2 Reset the FINE bow data.
See "Resetting the Data" on page 138.

3 Adjust the distortion as illustrated below with the ↑ and ↓ keys.

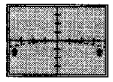

↑ : The left and right ends of the horizontal line curve upward while the center remains unchanged.

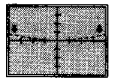

↓ : The right and left ends of the horizontal line curve downward while the center remains unchanged.

4 Press the SKEW key.

5 Reset the FINE skew data.
See "Resetting the Data" on page 138.

6 Adjust the distortion as illustrated below with the ↑ and ↓ keys.

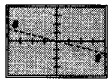

↑ : The horizontal line rotates counter-clockwise, rotating around the center.

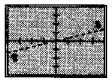

↓ : The horizontal line rotates clockwise, rotating around the center.

7 Repeat steps **1** to **6** until the red horizontal line converges with the green line.
Each time you press the BOW or SKEW key, the COARSE mode and FINE mode are selected alternately, and you can use the two modes appropriately. The adjustment data is stored for each mode separately. While you hold down the arrow key in the FINE mode, "f" is displayed around the adjustment position.

Adjusting the Registration

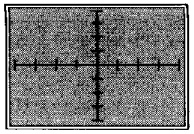

B Vertical line adjustment

If the vertical line of the picture is as shown by the dotted line in the illustrations below, adjust it with the corresponding arrow key so that it is perpendicular to the vertical line (bold line illustrated on the left).

1 Press the BOW key.
The CROSS HAIR pattern appears.
You can also change to the 9 × 9 HATCH pattern by pressing the PATTERN key.

2 Adjust the distortion as illustrated below with the ← and → keys.

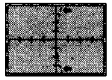

← : The upper and lower ends of the vertical line curve towards the left while the center remains unchanged.

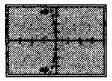

→ : The upper and lower ends of the vertical line curve towards the right while the center remains unchanged.

3 Press the SKEW key.

4 Adjust the distortion as illustrated below with the ← and → keys.

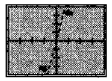

← : The vertical line rotates counter-clockwise, rotating around the center.

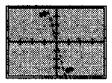

→ : The vertical line rotates clockwise, rotating around the center.

5 Repeat steps **1** to **4** until the red vertical line converges with the green line.
Each time you press the BOW or SKEW key, the COARSE mode and FINE mode are selected alternately, and you can use the two modes appropriately. The adjustment data is stored for each mode separately. While you hold down the arrow key in the FINE mode, "f" is displayed around the adjustment position.

10 Red KEY (keystone) and PIN (pincushion) adjustments

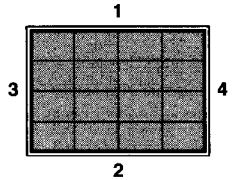

Adjust the trapezoidal and pincushion distortion at the top, bottom, right end and left end of the screen separately so that the red lines converge with the green lines.

A Horizontal line adjustment at the top

1 Press the KEY key.
The HATCH pattern appears.
The projector enters the upper keystone adjustment mode (POSITION No. 1) of the red signal.
When you press the POSITION + key, the adjustment position changes in the numerical order **1** to **4** as illustrated on the left. The selected position number appears at the upper right corner of the screen. When you press the POSITION – key, the position number is selected in the reverse order.

2 Adjust the distortion of the horizontal line at the top with the ↓ and ↑ keys.
Only the red line moves.

↑ : The horizontal line rotates counter-clockwise, rotating around the center.

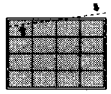

↓ : The horizontal line rotates clockwise, rotating around the center.

3 Press the PIN key.
The projector enters the upper pincushion adjustment mode (POSITION No. 1) of the red signal.
When you press the POSITION + key, the adjustment position changes in the numerical order **1** to **4** as illustrated on the left. The selected position number appears at the upper right corner of the screen. When you press the POSITION – key, the position number is selected in the reverse order.

(continued)

Adjusting the Registration

4 Adjust the distortion of the horizontal line on the top with the ↓ and ↑ keys.
Only the red line moves.

↑ : The left and right ends of the horizontal line curve upward while the center remains unchanged.

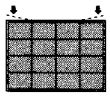

↓ : The left and right ends of the horizontal line curve downward while the center remains unchanged.

5 Repeat the adjustment with the KEY or PIN key and the ↓ and ↑ keys until the red horizontal line on the top converges with the green line.

B Horizontal line adjustment at the bottom

1 Press the KEY key and press the POSITION + key once.
The projector enters the lower keystone adjustment mode (POSITION No. 2) of the red signal.

2 Adjust the distortion of the horizontal line at the bottom with the ↓ and ↑ keys.
↑: The horizontal line rotates counter-clockwise, rotating around the center.
↓: The horizontal line rotates clockwise, rotating around the center.

3 Press the PIN key and press the POSITION + key once.
The projector enters the lower pincushion adjustment mode (POSITION No. 2) of the red signal.

4 Adjust the distortion of the horizontal line at the bottom with the ↓ and ↑ keys.
↑: The left and right ends of the horizontal line curve upward while the center remains unchanged.
↓: The left and right ends of the horizontal line curve downward while the center remains unchanged.

5 Repeat the adjustment with the KEY or PIN key and the ↓ and ↑ keys until the horizontal line at the bottom converges with the green line.

C Vertical line adjustment at the left side

1 Press the KEY key and press the POSITION + key once.
The projector enters the left keystone adjustment mode (POSITION No. 3) of the red signal.

2 Adjust the distortion of the vertical line at the left side with the ← and → keys.

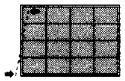

← :The vertical line rotates counter-clockwise, rotating around the center.

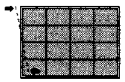

→ :The vertical line rotates clockwise, rotating around the center.

3 Press the PIN key and press the POSITION + key once.
The projector enters the left pincushion adjustment mode (POSITION No. 3) of the red signal.

4 Adjust the distortion of the vertical line at the left side with the ← and → keys.

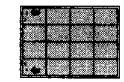

← :The upper and lower ends of the vertical line curve towards the left while the center remains unchanged.

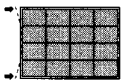

→ :The upper and lower ends of the vertical line curve towards the right while the center remains unchanged.

5 Repeat the adjustment with the KEY or PIN key and the ← and → keys until the vertical line at the left side converges with the green line.

Adjusting the Registration

D Vertical line adjustment at the right side

1 Press the KEY key and press the POSITION + key once.
The projector enters the right keystone adjustment mode (POSITION No. 4) of the red signal.

2 Adjust the distortion of the vertical line at the right side with the ← and → keys.
←: The vertical line rotates counter-clockwise, rotating around the center.
→: The vertical line rotates clockwise, rotating around the center.

3 Press the PIN key and press the POSITION + key once.
The projector enters the right pincushion adjustment mode (POSITION No. 4) of the red signal.

4 Adjust the distortion of the vertical line at the right side with the ← and → keys.
←: The upper and lower ends of the vertical line curve towards the left while the center remains unchanged.
→: The upper and lower ends of the vertical line curve towards the right while the center remains unchanged.

5 Repeat the adjustment with the KEY or PIN key and the ← and → keys until the vertical line at the right side converges with the green line.

11 Red ZONE adjustment

Adjust red ZONE after the red lines have converged with the green lines by performing the adjustments 7 to 10.

1 Press the ZONE key.
The 9 x 9 HATCH pattern and the cursor appear, and the projector enters the center zone adjustment mode (POSITION No. 1).

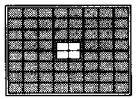

2 Reset the FINE zone data.
See "Resetting the data" on page 138.

3 Adjust the red line distortion in the cursor positioning area with the arrow keys.

For fine adjustment, press the ZONE key once to set the projector to the FINE mode. While you hold down the arrow key in the FINE mode, "f" is displayed around the adjustment position.

When you press the ZONE key in position No. 1, the adjustment mode changes as follows:
COARSE adjustment mode → FINE adjustment mode → position select mode → COARSE adjustment mode ...

4 After the adjustment is complete, press the ZONE key to set the projector to the position select mode.

5 Press the POSITION +/– keys to select the part to be adjusted.
When you press the + key, the cursor moves in the numerical order as illustrated.
When you press the – key, the cursor moves in the reverse order.
The selected position number appears at the upper right corner.

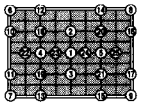

6 Press the ZONE key again after selecting the position.
The projector enters the COARSE adjustment mode.

7 Adjust the red line distortion in the cursor positioning area with the arrow keys.

(continued)

Adjusting the Registration

8 Press the ZONE key and repeat steps **5** to **7** to adjust in positions No. 2 to No.25 in order.

9 After the adjustment is complete, press the MEMORY key to save the adjustment data.

The red registration adjustment is complete.
Proceed to the registration adjustment of the blue signal.

Adjusting the Blue Registration

Adjust the blue signal so that it converges with the red signal which has been adjusted. When the blue and red test patterns converge, the pattern is seen as magenta.

Note

When you have adjusted the blue registration data and have saved the adjustment data, reset the blue centering to the factory preset level.
For resetting, see page 138.

12 Blue CENT (centering) adjustment

Adjust so that the center of the blue CROSS HAIR pattern is aligned with that of the red pattern.

1 Press the CENT key.
The CROSS HAIR pattern and the cursor appear.

2 Press the ADJ B key.

3 Press the CUT OFF G key to display blue and red.

4 Reset the FINE centering data.
See "Resetting the Data" on page 138.

5 Press the arrow keys to align the center of the blue CROSS HAIR pattern with that of the red pattern.

6 If the centers do not converge, press the CENT key again.
The projector enters the FINE centering mode for fine adjustment. Each time you press the CENT key, the COARSE mode and FINE mode are selected alternately, and you can use the two modes appropriately. The adjustment data is stored for each mode separately. While you hold down the arrow key in the FINE mode, "f" is displayed around the adjustment position.

7 Press the arrow keys to align the center precisely.

Notes

- If the blue vertical lines are not aligned with those of the red pattern, adjust the CRT conversion angle again.
For details, see "Adjusting the CRT Conversion Angle" on page 22.
- If the upper, lower, left or right part of the screen is de-focused, adjust the scheimpflug again.
For details, see "Adjusting the green scheimpflug" on page 83.

Adjusting the Registration

13 Blue SIZE, LIN (linearity), SKEW, BOW, KEY (keystone), PIN (pincushion) and ZONE adjustments

Adjust so that the blue signal converges with the red signal in each adjustment. The procedures are the same as for adjusting the red registration.
For details, see pages 108 to 118.

Make sure that "– – B" appears on the screen when adjusting the blue signal.

The blue adjustment is complete. Save the adjustment data as the standard data.

Saving the Standard Registration Data

After adjusting all the registrations for the green, red and blue signals, save the adjustment data as the standard data for the projector. The projector automatically changes the registration data of every input memory according to the standard data.

1 Hold down the MEMORY for more than 5 seconds.
"MEMORY DATA is saving!" is displayed while the projector saves the registration data. When saving is complete, the following display appears.

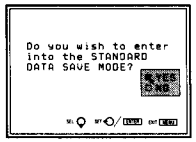

2 Press the ↑ or ↓ key to select YES, then press the ENTER key.
If you select YES, the STANDARD DATA SAVE MODE display appears.

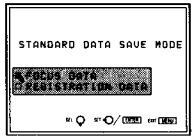

If you select NO, the registration adjustment mode is resumed.

3 Press the ↓ or ↑ key to select REGISTRATION DATA, then press the ENTER key.
The registration data of all the input memory are changed according to the standard data saved in step **1**.

Notes

- No keys function while the data is being saved.
- If the standard data save is performed, the registration data stored in every input memory will be changed into the standard data. If necessary, readjust the registration for each input signal.

Fine Adjustment for Each Input Signal

After the registration adjustment is performed without an input source and the adjustment data is saved as the standard data, input an external signal and fine adjust for each input signal.

Selecting the Input Signal

1 Input an external signal.
Input the signal to the INPUT A connectors of the projector, the VIDEO connectors of the IFB-G90E Video Interfrace Board, or the signal interface board installed to the INPUT B or INPUT C section.

2 Select the video input source by pressing the INPUT SELECT keys on the remote commander.

Fine Magnetic Focus and AQP/DQP Adjustments

1 Press the PATTERN key to display the 9 × 9 DOT pattern.

2 If necessary, fine adjust the magnetic focus, AQP and DQP.
For details, see "Adjusting the green magnetic focus, AQP/DQP and AHP/DHP" on page 87.

3 Press and release the MEMORY key to save the adjustment data.

Note
Do not hold down the MEMORY key in step **3**.

Fine Registration Adjustment

1 Press the PATTERN key to display the CROSS HAIR pattern.

2 If necessary, fine adjust the registrations.
For details of the adjustment procedure, see "Adjusting the Registration" on pages 93 to 120.

3 If two ore more input sources are connected, fine adjust the registration for each input signal.

4 Press and release the MEMORY key to save the adjustment data.

Note
Do not hold down the MEMORY key in step **4**.

SIZE Adjustment

Adjust the picture size if it does not fit the screen.

1 Press the RGB SIZE key.
(Use the RGB SIZE key even for the signal other than RGB.)

2 Adjust the picture size with the arrow keys.
↑ : The vertical size is expanded.
↓ : The vertical size is reduced.
→ : The horizontal size is expanded.
← : The horizontal size is reduced.

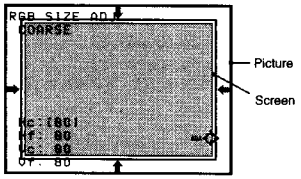

To adjust precisely, press the RGB SIZE key again. The projector enters the FINE adjustment mode, and you can fine adjust the size. By pressing the RGB SIZE key again, the COARSE adjustment mode is resumed.

3 Press the MEMORY key to save the adjustment data.

SHIFT Adjustment

If the picture needs to be shifted to fit the screen, adjust the position of the picture.

1 Press the RGB SHIFT key.
(Use the RGB SHIFT key even for the signal other than RGB.)

2 Press the POSITION +/– keys to select the adjustable range of the vertical shift (V SHIFT).

Note
When the video, S video, component or SDI 4:2:2 signal is input, V SHIFT is automatically fixed to NARROW and the adjustable range will become narrower than that of the RGB or HDTV signal.

(continued)

Fine Adjustment for Each Input Signal

3 Adjust the shift with the arrow keys.
↑ : The picture is shifted upward.
↓ : The picture is shifted downward.
→ : The picture is shifted rightward.
← : The picture is shifted leftward.

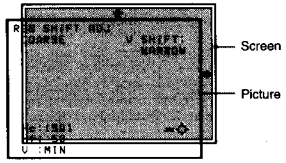

To adjust precisely, press the RGB SHIFT key again. The projector enters the FINE adjustment mode, and you can fine adjust the horizontal shift only.
By pressing the RGB SHIFT key again, the COARSE adjustment mode is resumed.

4 Press the MEMORY key to save the adjustment data.

Blanking Adjustment

If the displayed picture is larger than the screen, cut off the excess parts.

1 Press the BLKG key.
The external signal and the 17 × 17 HATCH pattern overlap.
You can also change to the external signal only by pressing the PATTERN key.

2 Press the POSITION +/– keys or the BLKG key to select the part to be adjusted.
- When you press the + key or the BLKG key, the position cycles through the following order:
  TOP → BOTTOM → LEFT → RIGHT → TOP...
- When you press the – key, the position cycles in reverse order.

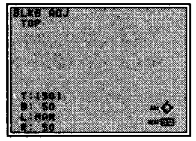

3 Adjust with the arrow keys.
- Press the ↑ and ↓ keys to adjust the TOP and BOTTOM positions.
- Press the ← and → keys to adjust the LEFT and RIGHT positions.

4 Press the MEMORY key to save the adjustment data.

Note
When you connect multiple input sources to the projector, such as when using the switcher, adjust the picture size, picture shift and blanking for each input signal. The information about the input signal is shown in the INPUT INFO menu.

Adjusting the White Balance

The color temperatures are preset at the factory to 9300K, 6500K, 5400K and 3200K for two types of screen, respectively. However, if you change these levels or set a color temperature other than the factory preset levels, you can adjust the white balance and save it in the memory.

Selecting the screen type

Select the type of screen in use: bead screen or mat screen.

1 Display the SERVICE SETTING 1 menu.
Press the MENU key, select SERVICE SETTING 1 by pressing the ↓ or ↑ key, and press the ENTER key.

2 Press the ↓ or ↑ key to select SCREEN TYPE, then press the ENTER key.

3 Press the ↓ or ↑ key toe select SCREEN B for bead screen or SCREEN M for mat screen, then press the ENTER key.

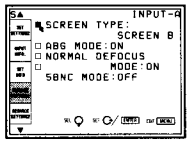

Setting the color temperature

1 Display the INPUT SETTING menu.
Press the MENU key, select INPUT SETTING with the ↓ or ↑ key, then press the ENTER key.

2 Press the ↓ or ↑ key to select COLOR TEMP, then press the ENTER key.

(continued)

Fine Adjustment for Each Input Signal

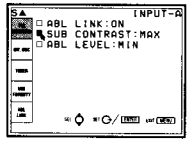

3 Press the ↓ or ↑ key to select the desired color temperature, then press the ENTER key.

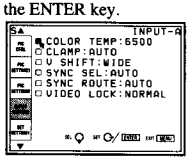

Normally set to 6500.
Select the appropriate color temprerature 9300, 6500, 5400 or 3200 according to your application and the picture source.
Select CUSTOM to adjust the white balance for a particular input signal and store the adjusted data to the input memory.

4 Press the MEMORY key to save the adjustment data.

Adjusting the white balance

You can readjust the color temperature or the CUSTOM data selected in COLOR TEMP of the INPUT SETTING menu. For example, adjust the white balance when you wish to make the color uniform with that of another display.

Adjusting the black level (BIAS adjustment)

1 Reset the CONTRAST level to 80 and BRIGHT level to 50.
For details, see "Adjusting the Picture Quality" on page 129.

2 Press the W/B BIAS key.
The PLUGE pattern appears. Press the PATTERN key repeatedly to display the external signal.

3 Press the ADJ R, G or B key to select the color to be adjusted.
When selecting the color, pay attention to the black part of the picture displayed on the screen and note which color stands out compared to that of another display.

4 Press the ← or → key so that the black part in the picture on the screen looks the same as that of the display.
If the brightness of that part does not look the same as that of the display, adjust the other colors by pressing the ADJ R, G or B key and the ← or → key.

5 Press the MEMORY key to save the adjustment data.

Adjusting the white level (GAIN adjustment)

1 Reset the CONTRAST level to 80 and BRIGHT level to 50.
For details, see "Adjusting the Picture Quality" on page 129.

2 Press the W/B GAIN key.
When the GAIN adjustment is followed by the BIAS adjustment, the external signal appears automatically.
When you start with the GAIN adjustment, the stair step pattern appears. Press the PATTERN key repeatedly to display the external signal.

3 Press the ADJ R, G or B key to select the color to be adjusted.
When selecting the color, pay attention to the white part of the picture displayed on the screen and note which color stands out compared to that of another display.

4 Press the ← or → key so that the white part in the picture on the screen looks the same as that of the display.
If the brightness does not look the same as that of the display, adjust the other colors by pressing the ADJ R, G or B key and the ← or → key.

5 Press the MEMORY key to save the adjustment data.

Adjusting the gray level (GAMMA adjustment)

1 Set the projector to the expert mode.
For entering into the expert mode, see "Expert mode" on page 54.

2 Reset the CONTRAST level to 80 and BRIGHT level to 50.
For details, see "Adjusting the Picture Quality" on page 129.

3 Press the W/B BIAS and GAIN keys simultaneously.
The stair step pattern appears. Press the PATTERN key repeatedly to display the external signal.

4 Press the ADJ R, G or B key to select the color to be adjusted.
When selecting the color, pay attention to the gray part of the picture displayed on the screen and note which color stands out compared to that of another display.

5 Press the ← or → key so that the gray part in the picture on the screen looks the same as that of the display.
If the birghtness does not look the same as that of the display, adjust the other colors by pressing the ADJ R, G or B key and the ← or → key.

6 Press the MEMORY key to save the adjustment data.

Fine Adjustment for Each Input Signal

When using multiple projectors
Input the same signal to the base projector and the projector to be adjusted. Set COLOR TEMP in the INPUT SETTING menu to the same position on both projectors, and then follow the procedures described above to make the black, white and gray colors uniform between the base projector and the projector to be adjusted.

Notes

- When adjusting the white balance, use the external color monitor for the reference of the color.
- To adjust the white balance easily without the on-screen display, press the STATUS OFF key on the remote commander or set the STATUS option in the SET SETTING 1 menu to OFF.
- You can adjust the white balance more easily if you set the color level to MIN to display the black and white picture.

Adjusting the Picture Quality

Adjust the picture for your preference. The adjustment data can be saved in the memory.

1 Adjust with the PICTURE CONTROL +/– keys.

BRIGHT	Brightness
CONTR	Picture contrast
COLOR	Color intensity
HUE	Hue
SHARP	Sharpness

The adjustment levels are digitally displayed with a range of MIN, 1, 2, ... 99, MAX.

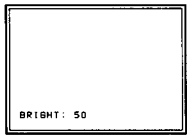

2 Press the MEMORY key to save the data.

Restoring the initial data

1 Press the PICTURE CONTROL key of the item which you want to reset to the initial data.

2 Press the RESET key.
The selected item is reset to the initial data.

Notes

- The COLOR, SHARP and HUE keys do not function with the RGB input signals.
- The HUE and COLOR keys do not function if the input signal is black and white.
- The HUE key does not function with the PAL or SECAM color input source.

Saving the Adjustment Data

Memory Blocks

The memory structure of this projector consists of the following four memory blocks.

See the diagram "Structure of memory blocks" on the next page.

User block

This is the memory block normally in use when the user operates the projector. The set/adjusted data are stored to this block automatically or by pressing the MEMORY key.
The data for the floor installation using the front projection and a 120-inch screen are adjusted at the factory and stored to input memory numbers 00 to 12 (Original Input Memory).

Memory contents in the user block
- Setting memory
- Channel memory
- 150 input memory (Original Memory No. 00 – 12 and Custom Memory No. 13 –149)

Service block

This is the memory block that backs up the set/adjusted data in the user block. The same data as those in the user block are stored at the factory to the Original Input Memory No. 00 – 12.

Memory contents in the service block
- Settting memory
- Channel memory
- 150 input memory (Original Memory No. 00 – 12 and Custom Memory No. 13 – 149)

Factory block

This is the memory block used at the factory. The data for the floor installation using the front projection and a 120-inch screen are adjusted at the factory and stored to input memory numbers 00 to 12 (Original Input Memory). The registration data and magnetic focus data in this block are used as reference values for the Standard Data Save.

Memory contents in the factory block
- Setting memory
- Channel memory
- 150 input memory (Original Memory No. 00 – 12)

Normal adjustment area

This is the memory block that temporarily stores the data adjusted by the remote commander so that the projector can reflect adjustments directly.

Structure of memory blocks

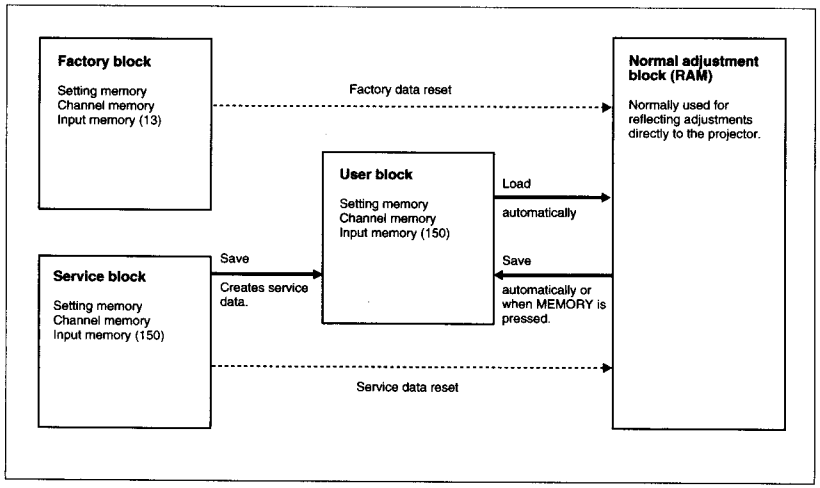

Setting memory
The setting memory stores the set/adjusted data of the items that have only one value for the projector.

Channel memory
The channel memory stores the set/adjusted data for each input channel, such as the input channel, type of input signal, and DRC ON/OFF setting.

Input memory
The input memory stores the set/adjusted data for each input signal type.
This projector has 150 input memory.
For details, see page 132.

Saving the Adjustment Data

Saving the Data to the Service Block

When you press the MEMORY key during adjustment, the adjusted data is stored in the user block. After all the adjustments are completed, we recommend that you store the adjustment data in the user block to the service block as service data.

1 Set the projector to the service or expert mode.
For details, see "Menu Modes" on page 51.

2 Press the NORMAL key.

3 Press the ENTER key for 5 seconds.
The following display appears.

4 Press the ↓ or ↑ key to select "YES," then press the ENTER key.

The data stored in the user block are saved to the service block as service data.

How to recall the service data

By recalling the service data, you can easily reset the projector to the previously adjusted conditions.
To reset to the service data, select "All Data Reset," "ALL MEMORY," and "Service Data" following the resetting procedure.
For details, see "Resetting Multiple Items Simultaneously" on page 139.

Input Memory

Contents of input memory

The 150 input memory of this projector is divided into two.
Either input memory stores the same data contents.
- **Original Input Memory** No. 00 – 12
- **Custom Input Memory** No. 13 – 149

Each input memory consists of the following data.
- **Identification data for the input signal**
- **Set/adjusted data** (registration, magnetic focus, CUSTOM data of white balance)
- **Data of video memory OFF**

Identification data for the input signal

The projector judges the input signal using the following identification data, and searches for and selects the appropriate input memory for the input signal.

Item	Data
Input channel (Custom Memory only)	Input channel selected when the input memory is registered to a new number VIDEO, INPUT-A, INPUT-B, INPUT-C, SWITCHER 1–1 to 8–8
Input signal type (Original and Custom Memory)	Type of the input signal when the input memory is registered to a new number VIDEO, S VIDEO, COMPONENT, RGB, 15 k RGB, HDTV-YPBPR, HDTV-GBR, SDI 4:2:2, DRC, IDTV, etc.
Sync signal type (Custom Memory only)	Type of the sync signal used when the input memory is registered to a new number H/C: P/N/–, V: P/N/–, SonG: N/– P (positive), N (negative), – (no sync)
Input frequency (Original and Custom Memory)	fH (horizontal frequency), fV (vertical frequency), scanning lines

Original Input Memory (No. 00 – 12)

The Original Input Memory stores the data set/adjusted at the factory. When a new type of signal is input, no signal is input or the internally generated signal is used, the projector loads the data of the Original Input Memory.

(continued)

Saving the Adjustment Data

As the Original Input Memory only includes the type of input signal and the input frequency (for RGB only) as identification data, the data most similar to the input signal is selected by judging the two types of information. The data of the selected memory are loaded.
The Original Input Memory numbers cannot be deleted in any way.

Original Input Memory

Memory No.	fH	fV	Scanning lines	Type of input signal
00	15.73 kHz	60.00 Hz	262	VIDEO ($NTSC_{3.58}$)
01	15.73 kHz	60.00 Hz	262	RGB
02	24.83 kHz	56.40 Hz	440	RGB
03	31.47 kHz	59.94 Hz	525	RGB
04	48.36 kHz	60.00 Hz	806	RGB
05	63.98 kHz	60.02 Hz	1066	RGB
06	75.00 kHz	60.00 Hz	1250	RGB
07	93.75 kHz	75.00 Hz	1250	RGB
08	106.25 kHz	85.00 Hz	1250	RGB
09	126.84 kHz	60.00 Hz	2114	RGB
10	145.00 kHz	60.00 Hz	2417	RGB
11	31.47 kHz	60.00 Hz	525	Double scan DRC ($NTSC_{3.58}$)
12	33.75 kHz	60.00 Hz	562	HDTV (YP_BP_R)

Custom Input Memory (No.13 – 149)

The Custom Input Memory stores the data of the input signals which are input after shipment. Each time a new signal is input, a new memory number is registered. When 150 input memory numbers including the Original Input Memory is reached, the Custom Input Memory with the lowest number is replaced.

Automatic loading/saving of the input memory

When MEM. LOAD/SAVE is set to AUTO in the INPUT MEM. OPTION menu *(page 66)*, the projector selects the input memory according to the input signal, loads its data and saves the set/adjusted data to the input memory automatically. The automatic selection mode differs if the input signal is new or existing.

When a new signal is input

When a new signal is input, the projector searches for the Original Input Memory and loads the data most similar to the input signal. When setting/adjustment is complete, press the MEMORY key. A new Custom Input Memory is registered, and simultaneously, the adjusted data are overwritten on the Original Input Memory. With this method, the Original Input Memory is updated, making the adjustment for the next new signal easier.

Example: When a new signal (fH = 31.5 kHz) is input with up to No. 13 Custom Input Memory registered

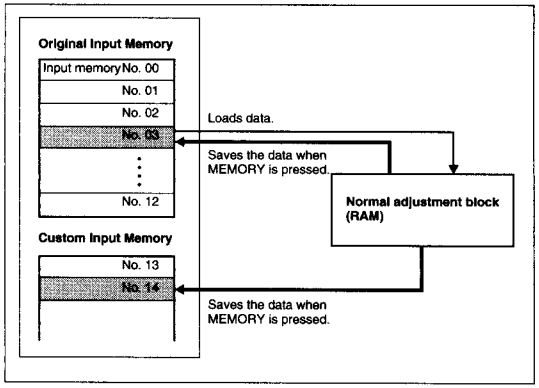

When the same signal has been input to another input channel

When a signal is input, the projector searches for the Original and Custom Input Memory and loads the data most similar to the input signal. When setting/adjustment is complete, press the MEMORY key. A new Custom Input Memory is registered, and simultaneously, the adjusted data are overwritten on the Original Input Memory.

Example: When the same signal (fH = 31.5 kHz) is input on another channel with up to No. 13 Custom Input Memory registered

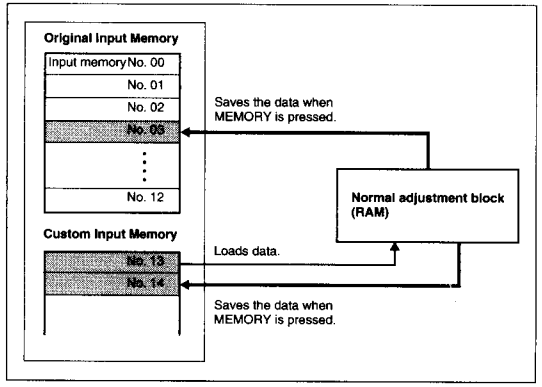

Saving the Adjustment Data

When the same signal has been input
When the same signal has been input, the projector searches for the Original and Custom Input Memory and loads the data of the existing input memory for that signal. When setting/adjustment is complete, press the MEMORY key. The adjusted data is overwritten on the loaded Custom Input Memory, and simultaneously, on the Original Input Memory that was the base of the loaded Custom Input Memory.

Example: When the same signal (fH = 31.5 kHz) as that registered to No. 13 Custom Input Memory is input

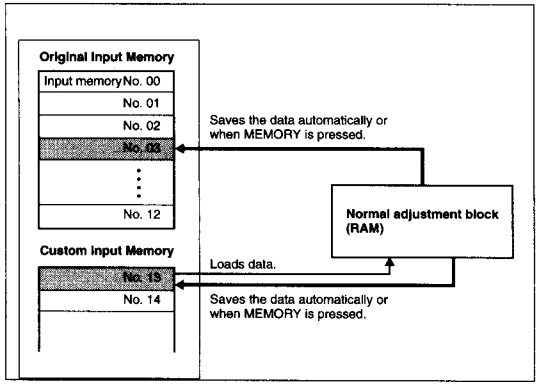

Specifying the input memory to be loaded or saved

When MEM. LOAD/SAVE is set to MANUAL in the INPUT MEM. OPTION menu, you can specify the input memory number to be loaded or saved.

For details, see "The INPUT MEM. OPTION menu" on page 66.

Video Memory

The video memory stores the aspect ratio and picture control data. This projector has No. 1 – 10 video memory, and each video memory stores the same data contents.
If you set the video memory to OFF, the aspect ratio and picture control data stored in the input memory are loaded.

Contents of Video Memory

Item	Data
COLOR TEMPERATURE	9300/6500/5400/3200/CUSTOM
WHITE BALANCE CUSTOM	GAIN: R/G/B BIAS Coarse: R/G/B BIAS Fine: R/G/B GAMMA: R/G/B (Different data for two screen types)
DYNAMIC PICTURE	ON/OFF
V SHIFT	WIDE/NARROW
NTSC SET UP	0/7.5
COMPONENT FORMAT	SMPTE-EBU-N10/BETACAM7.5
COMB FILTER	3D/3LINE
DRC LEVEL	HIGH/LOW
PICTURE CONTROL	CONTRAST/BRIGHTNESS/COLOR/HUE/SHARPNESS
RGB SIZE	Hc/Hf/Vc/Vf
RGB SHIFT	Hc/Hf/Vc
BLANKING	TOP/BOTTOM/LEFT/RIGHT

Specifying the video memory

Set the SWITCHER/VIDEO MEMORY/INDEX select switch to VIDEO MEMORY, and select a video memory number using the SWITCHER/VIDEO MEMORY/INDEX keys on the remote commander or the control panel.
For details, see page 48.

Resetting the Data

This projector has the following reset modes.

Normal Reset mode: Resets the data being adjusted.
For resetting items, see "List of Resetting Items" on page 140.

All Data Reset mode: Resets multiple items together.
For example, you can reset the data of the selected input memory, or all the data simultaneously.

Depending on the resetting item, select the memory block which stores the data to be reset.
- **Data in the service block**
- **Data in the factory block**
- **FINE128 data** (for items with the FINE mode only)
- **128 data** (ZONE only)

Resetting the Item in Adjustment Only (Normal Reset)

1 Set the item you want to reset to the adjustment mode.

2 Press the RESET key once.
(Depending on the selected item, data is reset at this stage.)

If the item can be reset to the data in two or more memory blocks, the following display appears.
(Example: To reset the green centering data)

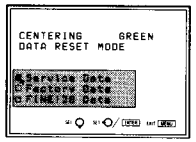

3 Press the ↓ or ↑ key to select the reset mode.
Service Data: To reset to the data in the service block
Factory Data: To reset to the data in the factory block
FINE128 Data: To reset to the data in FINE adjustment mode

4 Press the ENTER key.
The data is reset. When resetting is completed, "Reset Complete!" appears for about 3 seconds.

Note
If you do not operate the keys within more than one minute, the display is canceled.

Resetting Multiple Items Simultaneously (All Data Reset)

1 Set the projector to the service mode.
For details, see "Menu Modes" on page 53.

2 Press the RESET key for five seconds.
The following display appears.

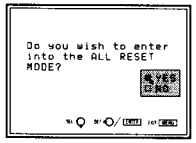

3 Press the ↓ or ↑ key to select "YES," then press the ENTER key.
The projector enters into the ALL RESET MODE, and the following display appears.

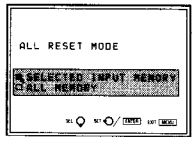

4 Press the ↓ or ↑ key key to select the memory block, then press the ENTER key.
SELECTED INPUT MEMORY: To reset the data of the selected input memory
ALL MEMORY: To reset all the adjustment data

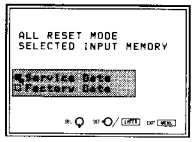

5 Press the ↓ or ↑ key key to select the reset mode.
Service Data: To reset to the data in the service block
Factory Data: To reset to the data in the factory block

6 Press the ENTER key.
The data is reset. When resetting is completed, "Reset Complete!" appears for about three seconds.

Note
If you do not operate the keys within more than one minute, the display is canceled.

Saving the Adjustment Data

List of Resetting Items

Adjustment mode while resetting	Color to be reset	Data to be reset simultaneously	Reset mode	Projector mode
CENTERING Coarse	Selected color	Hc/Hf/Vc/Vf [1]	Service Data or Factory Data	Service/Expert
CENTERING Fine	Selected color	Hc/Hf/Vc/Vf [1] (Pro-user mode: Hf/Vf only)	Service Data or Factory Data	Pro-user/Service/ Expert
SIZE Coarse SIZE Fine LIN Coarse LIN Fine SKEW Coarse SKEW Fine BOW Coarse BOW Fine	Selected color	CENTERING/SIZE/LIN/SKEW/BOW (Hc/Hf/Vc/Vf) KEY/PIN (all positions) ZONE (all positions)	Service Data or Factory Data	Service/Expert
KEY PIN	Selected color	CENTERING/SIZE/LIN/SKEW/BOW (Hc/Hf/Vc/Vf) KEY/PIN (all positions) ZONE (all positions)	Service Data or Factory Data	
ZONE	Selected color	ZONE (except position 1) [1]	Service Data or Factory Data	
MG FOCUS	All colors (RGB)	FOCUS, 2/4/6-pole AQP/DQP/AHP/ DHP (all data of all positions)	Service Data or Factory Data	
BIAS Coarse BIAS Fine GAIN GAMMA	—	BIAS Coase, BIAS Fine, GAIN, GAMMA (Expert mode only) [2]	Service Data or Factory Data	Service/Expert
RGB SIZE	—	RGB SIZE (Hc/Hf/Vc/Vf) [3] [4]	Factory Data	Pro-user/Service/ Expert
RGB SHIFT	—	RGB SHIFT [3] [4]	Factory Data	
BLANKING	— — —	BLANKING (TOP/BOTTOM/EFT/ RIGHT) [3] [4] RGB (including 15 KHz RGB)	Factory Data	
CONTRAST	—	CONTRAST [3]	80	User/Pro-user/ Service/Expert
BRIGHT	—	BRIGHT [3]	50	
COLOR	—	COLOR [3]	50	
SHARP	—	SHARPNESS [3]	50	
HUE		HUE [3]	50	
PIC CTRL menu		CONTRAST/BRIGHT/COLOR/ SHARPNESS/HUE [3]	80, 50, 50, 50, 50	

1) Data of the currently selected input memory for the current input channel in RAM
2) Data for the currently selected screen type and color temperature in RAM
3) Data of the currently selected input memory or video memory in RAM
4) Effective for VIDEO, S-VIDEO, COMPONENT, SDI 4:2:2, IDTV (INT DRC/via IFB-3000) and HDTV (YPBPR/GRB) only

Others

Setting the Index Numbers

When you connect multiple projectors in your system, you have to set the group index and device index numbers for each projector.

To set the group index number

If you set the same group index number to multiple projectors and switchers, you can operate them simultaneously, for example, to select the input, by designating the group index number.

1 Set the projector to the pro-user, service or expert mode.
For details, see "Menu Modes" on page 51.

2 Display the SET SETTING 2 menu, select GROUP INDEX by pressing the ↓ or ↑ key, and press the ENTER key.

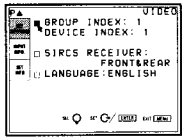

3 Set a group index number 01 to 99 by pressing the ← or → key, then press the ENTER key.

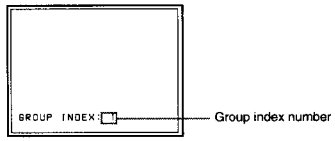

(continued)

Setting the Index Numbers

4 Press the MENU key to exit the menu mode.

To set the device index number

If you set the device index number, you can control each projector individually with the supplied remote commander.
Set the device index number with the DEVICE INDEX switches on the rear of the projector. Device index number "01" is set at the factory. Do not change from "01" if the projector is used alone.

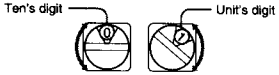

Notes

- Do not set the same device index number on multiple projectors in the same system.
- Do not set the device index number to "00." If you do, the projector will be operated only with the keys on the control panel. It cannot be controlled with the wired or wireless Remote Commander, or with an external equipment via the PJ COM connector.

Notes on setting of the index number

- **Set the same group index number for all equipment of the same system connection (those on the signal route between the signal source and the projector).**

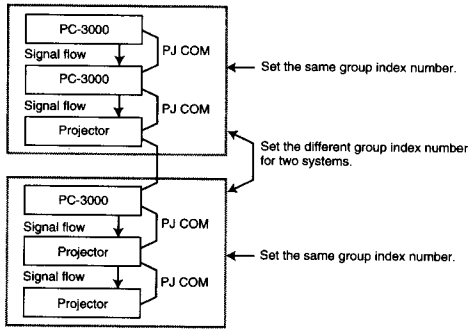

- **Set the correct group and device index numbers and the switcher number.**
  Do not set the same device index number or the same switcher number in one group.
  For example, if there are different pieces of equipment with the switcher number 1, the error message will appear when the SYS SET key is pressed.

Notes

- Do not set the same device index number on multiple projectors in the same system.

- **Set the switcher that outputs the signal to the projector to number 1.**

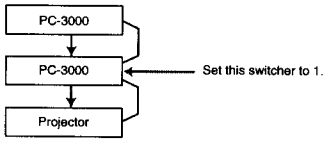

Notes on connections when two or more switchers are used

- **Mount the IFB-12/12A interface board to the slot 1 of the number (n) switcher and connect the output connector of the number (n+1) switcher to the IFB-12/12A.**
- **You can attach the IFB-12/12A signal interface board (when the IN/OUT switch is set to OUT) only to the number 1 switcher.**

List of the Projection Distance by Angle of Optical Axis

To select the projector by designating the index numbers

When the switchers and projectors are connected as illustrated, select the desired projector by pressing the keys on the remote commander as shown below.

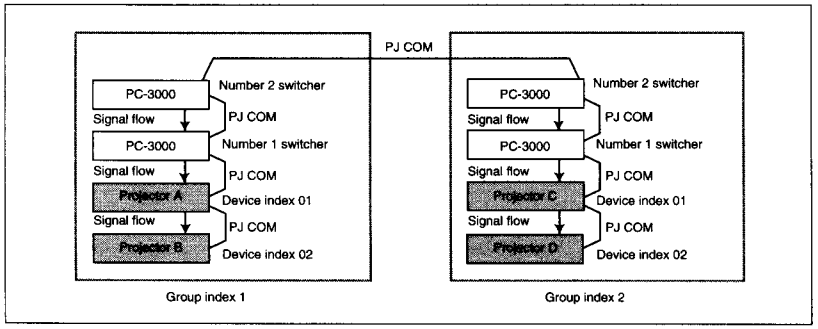

Example:

To select all the projectors
GROUP → ALL → ENTER → ALL → ENTER
Projectors A, B, C and D are selected.

To select projectors with device index 01 from all the groups
GROUP → ALL → ENTER → 1 → ENTER
Projectors A and C are selected.

To select a projector with device index 01 from group index 2
GROUP → 2 → ENTER → 1 → ENTER
Projector C is selected.

To select all the projectors from group index 2
GROUP → 2 → ENTER → ALL → ENTER
Projectors C and D are selected.

Notes

- Set the group index and device index numbers correctly. If more than two projectors are set to the same group index and device index numbers, an error message will be displayed when the SYS SET key is pressed.
- If the group index is a tens digit number, press the GROUP key before each press of the number key.

Example:
To select a projector with device index 13 of group index 12
GROUP → 1 → GROUP → 2 → ENTER → 1 → 3 → ENTER

Link Functions

Using the Linked ABL Function

What is linked ABL function?

The ABL (Automatic Brightness Limiter) function is incorporated with the projector. The ABL function prevents CRT burn by controlling the brightness of the screen if it becomes too high.
If you connect the LINK jacks of each projector when connecting multiple projectors to display a multi-screen, the ABL functions on all projectors once the ABL functions on any one projector. The linked ABL function allows the multi-screen's brightness uniform.

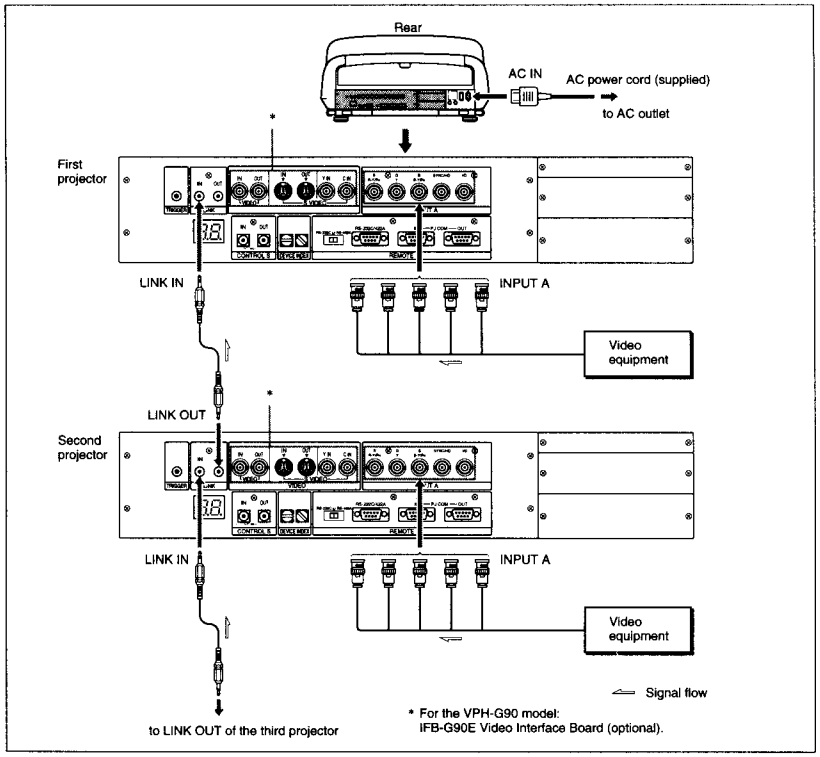

Setting up

Set ABL LINK in the ABL LINK menu to ON.
For details, see "The ABL LINK Menu" on page 74.

Link Functions

Adjusting the ABL LINK

1 Set the projector to the service mode.
For details, see "Service mode" on page 53.

2 Set the CONTRAST levels of all projectors to the same level.

3 Adjust the brightness of each projector to make its black level uniform.

4 Input an external signal to display the 1/16 window pattern.

5 Display the ABL LINK menu, select SUB CONTRAST with the ↓ or ↑ key, then press the ENTER key.

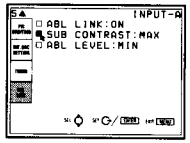

6 Press the ↓ or ↑ key to adjust the projector so that the brightness looks the same as that of the darkest projector, then press the ENTER key.

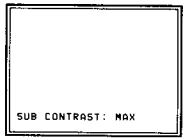

7 Repeat steps **4** to **6** on each projector so that the brightness of all projectors looks the same.

8 Input an external signal to display the all white pattern.

9 Select ABL LEVEL in the ABL LINK menu, then press the ENTER key.

10 Press the ↓ or ↑ key to adjust the projector so that the brightness looks the same as that of the darkest projector, then press the ENTER key.

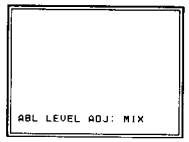

11 Repeat steps **8** to **10** on each projector so that the brightness of all projectors looks the same.

12 Set ABL LINK in the ABL LINK menu to ON, then press the ENTER key.
If the ABL functions on any one projector, the brightness of all projectors becomes uniform.

Self-diagnosis Function

When a operational trouble occurs, a double-digit code will light up on the LED window on the rear of the projector.
Refer to the chart below for the meanings of the main self-diagnostic codes.

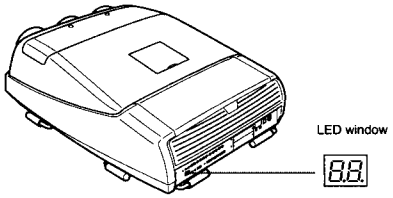

Code (color)	Type	Item	Meaning
3A (green)	Warning		Changin the input memory
40 (green)	Warning		Configuring the system
41 (green)	Warning		Same DEVICE INDEX for the projecter detected
42 (green)	Warning		Same DEVICE INDEX for the switcher detected
43 (green)	Warning		Master switcher does not exist.
60 (orange)	Protector	Unknown	Abnormalities that do not come under the errors below.
61 (orange)	Protector	POW1	Abnormal in the 200 V line
62 (orange)	Protector	POW2	Abnormal in the 115 V line
63 (orange)	Protector	POW3	Abnormal in the 50 V line
64 (orange)	Protector	POW4	Abnormal in the 15 V line
65 (orange)	Protector	POL	The cover ofthe polarity switchers does not shut completely.
66 (orange)	Protector	H.STOP	Horizontal deflection is stopped.
67 (orange)	Protector	V.STOP	Vertical deflection is stopped.
68 (orange)	Protector	SUB	Abnormality of the DC board
69 (orange)	Protector	HV	Abnormal high voltage
6A (orange)	Protector	LOT	Abnormal load on a LOT of the PE board
6B (orange)	Protector	Ik	Current in any of the R, G and B CRTs exceeds the rated output.
6C (orange)	Protector	Σ Ik	There is abnormality in the CRTs.
6D (orange)	Protector	FAN 1	A large fan inside the projector does not work.
6E (orange)	Protector	FAN 2	A small fan inside the projector does not work.
6F (orange)	Protector	LENS	A lens is removed.
70 (orange)	Protector	CRTR	Current in the red CRT exceeds the rated output.
71 (orange)	Protector	CRTG	Current in the green CRT exceeds the rated output.
72 (orange)	Protector	CRTB	Current in the blue CRT exceeds the rated output.
73 (orange)	Protector	IFB	Abnormality of the interface board installed to the INPUT B section
74 (orange)	Protector	IFB	Abnormality of the interface board installed to the INPUT C section
80 (orange)	Protector	BA	Abnormality of the power line on the BA board
81 (orange)	Protector	DA	Abnormality of the power line on the DA board
82 (orange)	Protector	DB	Abnormality of the power line on the DB board
83 (orange)	Protector	DD	Abnormality of the power line on the DD board
84 (orange)	Protector	DE	Abnormality of the power line on the DE board

Code (color)	Type	Item	Meaning
85 (orange)	Protector	EBR	Abnormality of the EBR board
86 (orange)	Protector	EBG	Abnormality of the EBG board
87 (orange)	Protector	EBB	Abnormality of the EBB board
88 (red)	Warning		Initializing
89 (orange)	Protector	EBH	Abnormality of the EBH board
8A (orange)	Protector	EBQ	Abnormality of the EBQ board

Types of code

There are three types of self-diagnostic codes.

Warning (green): The power remains. Check your system and connections.

Protector (orange): The power turns off and the projector is set to the standby condition. Remove the cause of the trouble and press the ON key on the remote commander to restore the power.

Error (red): The power turns off and the projector cannot receive any command from the remote commander. Remove the cause of the trouble and press the MAIN POWER switch on the projector to restore the power.

Notes

- When an error code lights up, the previous adjustment data may be cleared.
- The code disappears when the MAIN POWER switch is turned off.
- The code lights up every time the power is turned on until the operational trouble is returned to normal.
- Immediately after the MAIN POWER switch is turned on, "88" is displayed in red, then in orange, for about two seconds. This is not a problem. The unit initializes the CPUs during this period.

List of the Projection Distance by Angle of Optical Axis

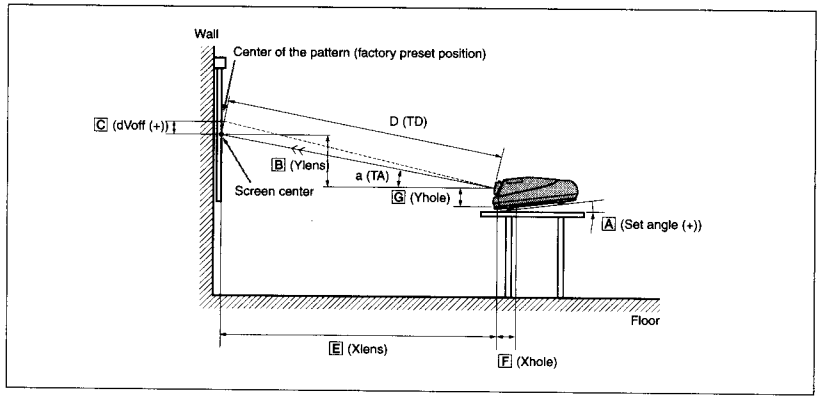

Unit: mm (inches) for F Xhole and G Yhole only

a TA (deg)	13.6°	12°	11°	10°	9°	8°	7°	6°	5°	4°	3°	2°	1°	0°	−1°	−2°
B / E	0.2419	0.2126	0.1944	0.1763	0.1584	0.1405	0.1228	0.1051	0.0875	0.0699	0.0524	0.0349	0.0175	0.0000	−0.0175	−0.0349
A Angle	0.0°	1.6°	2.6°	3.6°	4.5°	5.4°	6.4°	7.3°	8.2°	9.1°	10.0°	10.9°	11.9°	12.8°	13.7°	14.6°
F Xhole	281.3 (11 1/8)	288.6 (11 3/8)	293 (11 5/8)	297.3 (11 3/4)	301.1 (11 7/8)	304.9 (12 1/8)	308.9 (12 1/4)	312.5 (12 3/8)	316 (12 1/2)	319.4 (12 5/8)	322.8 (12 3/4)	326.1 (12 7/8)	329.6 (13)	332.7 (13 1/8)	335.7 (13 1/4)	338.6 (13 3/8)
G Yhole	263.4 (10 3/8)	255.4 (10 1/8)	250.3 (9 7/8)	245.2 (9 3/4)	240.5 (9 1/2)	235.8 (9 3/8)	230.4 (9 1/8)	225.5 (9)	220.6 (8 3/4)	215.6 (8 1/2)	210.6 (8 3/8)	205.5 (8 1/8)	199.7 (7 7/8)	194.5 (7 3/4)	189.3 (7 1/2)	184 (7 1/4)

When using the 90 inch screen

Unit: mm (inches)

a TA (deg)	13.6°	12°	11°	10°	9°	8°	7°	6°	5°	4°	3°	2°	1°	0°	−1°	−2°
E Xlens	2515 (99 1/8)	2529 (99 5/8)	2536 (99 7/8)	2543 (100 1/8)	2549 (100 3/8)	2554 (100 5/8)	2558 (100 3/4)	2562 (100 7/8)	2565 (101)	2567 (101 1/8)	2569 (101 1/4)	2570 (101 1/4)	2570 (101 1/4)	2570 (101 1/4)	2569 (101 1/4)	2568 (101 1/8)
B Ylens	606 (23 7/8)	538 (21 1/4)	493 (19 1/2)	448 (17 3/4)	404 (16)	359 (14 1/4)	314 (12 3/8)	269 (10 5/8)	224 (8 7/8)	180 (7 1/8)	135 (5 3/8)	90 (3 5/8)	45 (1 13/16)	0 (0)	−45 (−1 13/16)	−90 (−3 5/8)
D TD	2587 (101 7/8)	2585 (101 7/8)	2584 (101 3/4)	2582 (101 3/4)	2581 (101 5/8)	2579 (101 5/8)	2577 (101 1/2)	2576 (101 1/2)	2575 (101 3/8)	2574 (101 3/8)	2573 (101 3/8)	2572 (101 1/4)	2571 (101 1/4)	2570 (101 1/4)	2570 (101 1/4)	2569 (101 1/4)
C dVoff	0 (0)	0 (0)	0 (0)	0 (0)	3 (1/8)	7 (9/32)	10 (13/32)	14 (9/16)	17 (11/16)	21 (27/32)	24 (31/32)	28 (1 1/8)	32 (1 5/16)	35 (1 7/16)	39 (1 9/16)	42 (1 11/16)

When using the 100 inch screen

Unit: mm (inches)

a TA (deg)	13.6°	12°	11°	10°	9°	8°	7°	6°	5°	4°	3°	2°	1°	0°	−1°	−2°
E Xlens	2768 (109)	2783 (109 5/8)	2791 (110)	2799 (110 1/4)	2805 (110 1/2)	2811 (110 3/4)	2816 (110 7/8)	2820 (111 1/8)	2823 (111 1/4)	2826 (111 1/4)	2827 (111 3/8)	2829 (111 3/8)	2829 (111 3/8)	2829 (111 3/8)	2828 (111 3/8)	2826 (111 3/8)
B Ylens	667 (26 3/8)	592 (23 3/8)	543 (21 1/2)	494 (19 1/2)	444 (17 1/2)	395 (15 5/8)	346 (13 5/8)	296 (11 3/4)	247 (9 3/4)	198 (7 7/8)	148 (5 7/8)	99 (4)	49 (1 15/16)	0 (0)	−49 (−1 15/16)	−99 (−4)
D TD	2847 (112 1/8)	2845 (112 1/8)	2844 (112)	2842 (112)	2840 (111 7/8)	2839 (111 7/8)	2837 (111 3/4)	2835 (111 5/8)	2834 (111 5/8)	2833 (111 5/8)	2831 (111 1/2)	2830 (111 1/2)	2829 (111 1/2)	2829 (111 3/8)	2828 (111 3/8)	2828 (111 3/8)
C dVoff	0 (0)	0 (0)	0 (0)	0 (0)	3 (1/8)	7 (9/32)	11 (7/16)	15 (19/32)	19 (3/4)	23 (29/32)	27 (1 1/8)	31 (1 1/4)	35 (1 7/16)	39 (1 9/16)	43 (1 3/4)	47 (1 7/8)

When using the 110 inch screen

Unit: mm (inches)

a TA (deg)	13.6°	12°	11°	10°	9°	8°	7°	6°	5°	4°	3°	2°	1°	0°	−1°	−2°
E Xlens	3025 (119 1/8)	3041 (119 3/4)	3050 (120 1/8)	3058 (120 1/2)	3065 (120 3/4)	3071 (121)	3077 (121 1/8)	3081 (121 3/8)	3085 (121 1/2)	3087 (121 5/8)	3089 (121 3/4)	3091 (121 3/4)	3091 (121 3/4)	3091 (121 3/4)	3090 (121 3/4)	3088 (121 5/8)
B Ylens	729 (28 3/4)	646 (25 1/2)	593 (23 3/8)	539 (21 1/4)	486 (19 1/4)	432 (17 1/8)	378 (15)	324 (12 7/8)	270 (10 3/4)	216 (8 5/8)	162 (6 1/2)	108 (4 3/8)	54 (2 1/4)	0 (0)	−54 (−2 1/4)	−108 (−4 3/8)
D TD	3111 (122 1/2)	3109 (122 1/2)	3107 (122 3/8)	3106 (122 3/8)	3104 (122 1/4)	3102 (122 1/8)	3100 (122 1/8)	3098 (122)	3096 (122)	3095 (121 7/8)	3094 (121 7/8)	3093 (121 7/8)	3092 (121 3/4)	3091 (121 3/4)	3090 (121 3/4)	3090 (121 3/4)
C dVoff	0 (0)	0 (0)	0 (0)	0 (0)	3 (1/8)	7 (9/32)	11 (7/16)	16 (21/32)	20 (13/16)	25 (1)	29 (1 3/16)	33 (1 5/16)	38 (1 1/2)	42 (1 11/16)	47 (1 7/8)	51 (2 1/8)

When using the 120 inch screen

Unit: mm (inches)

a TA (deg)	13.6°	12°	11°	10°	9°	8°	7°	6°	5°	4°	3°	2°	1°	0°	−1°	−2°
E Xlens	3279 (129 1/8)	3297 (129 7/8)	3307 (130 1/4)	3316 (130 5/8)	3324 (130 7/8)	3330 (131 1/8)	3336 (131 1/8)	3341 (131 5/8)	3344 (131 3/4)	3347 (131 7/8)	3350 (131 7/8)	3351 (132)	3351 (132)	3351 (132)	3350 (132)	3348 (131 7/8)
B Ylens	791 (31 1/4)	701 (27 5/8)	643 (25 3/8)	585 (23 1/8)	526 (20 3/4)	468 (18 1/2)	410 (16 1/4)	351 (13 7/8)	293 (11 5/8)	234 (9 1/4)	176 (7)	117 (4 5/8)	59 (2 3/8)	0 (0)	−59 (−2 3/8)	−117 (−4 5/8)
D TD	3373 (132 7/8)	3371 (132 3/4)	3369 (132 3/4)	3367 (132 5/8)	3365 (132 1/2)	3363 (132 1/2)	3361 (132 3/8)	3359 (132 1/4)	3357 (132 1/4)	3356 (132 1/8)	3354 (132 1/8)	3353 (132 1/8)	3352 (132)	3351 (132)	3350 (132)	3350 (132)
C dVoff	0 (0)	0 (0)	0 (0)	0 (0)	3 (1/8)	7 (9/32)	12 (1/2)	17 (11/16)	22 (7/8)	27 (1 1/8)	31 (1 1/4)	36 (1 7/16)	41 (1 5/8)	46 (1 13/16)	51 (2 1/8)	56 (2 1/4)

When using the 130 inch screen

Unit: mm (inches)

a TA (deg)	13.6°	12°	11°	10°	9°	8°	7°	6°	5°	4°	3°	2°	1°	0°	−1°	−2°
E Xlens	3570 (140 5/8)	3589 (141 3/8)	3600 (141 3/4)	3610 (142 1/4)	3618 (142 1/2)	3625 (142 3/4)	3632 (143)	3637 (143 1/4)	3641 (143 3/8)	3644 (143 1/2)	3647 (143 5/8)	3648 (143 3/4)	3649 (143 3/4)	3648 (143 3/4)	3647 (143 5/8)	3645 (143 1/2)
B Ylens	861 (34)	763 (30 1/8)	700 (27 5/8)	637 (25 1/8)	573 (22 5/8)	510 (20 1/8)	446 (17 5/8)	382 (15 1/8)	319 (12 5/8)	255 (10 1/8)	191 (7 5/8)	127 (5)	64 (2 5/8)	0 (0)	−64 (−2 5/8)	−127 (−5)
D TD	3673 (144 5/8)	3670 (144 1/2)	3668 (144 1/2)	3666 (144 3/8)	3664 (144 5/32)	3661 (144 1/4)	3659 (144 1/8)	3657 (144)	3655 (144)	3653 (143 7/8)	3652 (143 7/8)	3650 (143 3/4)	3649 (143 3/4)	3648 (143 3/4)	3647 (143 5/8)	3647 (143 5/8)
C dVoff	0 (0)	0 (0)	0 (0)	0 (0)	3 (1/8)	8 (11/32)	13 (17/32)	19 (3/4)	24 (31/32)	29 (1 3/16)	34 (1 3/8)	39 (1 9/16)	45 (1 13/16)	50 (2)	55 (2 1/4)	60 (2 3/8)

When using the 140 inch screen

Unit: mm (inches)

a TA (deg)	13.6°	12°	11°	10°	9°	8°	7°	6°	5°	4°	3°	2°	1°	0°	−1°	−2°
E Xlens	3861 (152 1/8)	3882 (152 7/8)	3894 (153 3/8)	3904 (153 3/4)	3913 (154 1/8)	3921 (154 3/8)	3927 (154 5/8)	3933 (154 7/8)	3938 (155 1/8)	3941 (155 1/4)	3944 (155 3/8)	3945 (155 3/8)	3946 (155 5/8)	3946 (155 3/8)	3944 (155 3/8)	3942 (155 1/4)
B Ylens	932 (36 3/4)	825 (32 1/2)	757 (29 7/8)	688 (27 1/8)	620 (24 1/2)	551 (21 3/4)	482 (19)	413 (16 3/8)	345 (13 5/8)	276 (10 7/8)	207 (8 1/4)	138 (5 1/2)	69 (2 3/4)	0 (0)	−69 (−2 3/4)	−138 (−5 1/2)
D TD	3972 (156 3/8)	3969 (156 1/4)	3967 (156 1/4)	3965 (156 1/8)	3962 (156)	3959 (156)	3957 (155 7/8)	3955 (155 3/4)	3953 (155 5/8)	3951 (155 5/8)	3949 (155 1/2)	3948 (155 1/2)	3947 (155 3/8)	3946 (155 3/8)	3945 (155 3/8)	3944 (155 3/8)
C dVoff	0 (0)	0 (0)	0 (0)	0 (0)	4 (3/16)	9 (3/8)	15 (19/32)	20 (13/16)	26 (1 1/16)	31 (1 1/4)	37 (1 1/2)	42 (1 11/16)	48 (1 15/16)	54 (2 1/4)	59 (2 3/8)	65 (2 5/8)

List of the Projection Distance by Angle of Optical Axis

When using the 150 inch screen

Unit: mm (inches)

a TA (deg)	13.6°	12°	11°	10°	9°	8°	7°	6°	5°	4°	3°	2°	1°	0°	–1°	–2°
E Xlens	4166 (164 1/8)	4188 (165)	4201 (165 1/2)	4212 (165 7/8)	4222 (166 1/4)	4230 (166 5/8)	4237 (166 7/8)	4243 (167 1/8)	4248 (167 3/8)	4252 (167 1/2)	4255 (167 5/8)	4257 (167 7/8)	4257 (167 5/8)	4257 (167 5/8)	4255 (167 5/8)	4253 (167 1/2)
B Ylens	1005 (39 5/8)	890 (35 1/8)	817 (32 1/4)	743 (29 3/8)	669 (26 3/8)	595 (23 1/2)	520 (20 1/2)	446 (17 5/8)	372 (14 3/4)	297 (11 3/4)	223 (8 7/8)	149 (5 7/8)	74 (3)	0 (0)	–74 (–3)	–149 (–5 7/8)
D TD	4285 (168 3/4)	4282 (168 5/8)	4280 (168 1/2)	4277 (168 1/2)	4275 (168 3/8)	4272 (168 1/4)	4269 (168 1/8)	4267 (168)	4265 (168)	4263 (167 7/8)	4261 (167 3/4)	4259 (167 3/4)	4258 (167 3/4)	4257 (167 5/8)	4256 (167 5/8)	4255 (167 5/8)
C dVoff	0 (0)	0 (0)	0 (0)	0 (0)	5 (7/32)	11 (7/16)	16 (21/32)	22 (7/8)	28 (1 1/8)	34 (1 3/8)	40 (1 5/8)	46 (1 13/16)	52 (2 1/8)	58 (2 3/8)	64 (2 5/8)	70 (2 7/8)

When using the 160 inch screen

Unit: mm (inches)

a TA (deg)	13.6°	12°	11°	10°	9°	8°	7°	6°	5°	4°	3°	2°	1°	0°	–1°	–2°
E Xlens	4444 (175)	4467 (176)	4481 (176 1/2)	4493 (177)	4503 (177 3/8)	4512 (177 3/4)	4520 (178)	4526 (178 1/4)	4532 (178 1/2)	4536 (178 5/8)	4539 (178 3/4)	4540 (178 7/8)	4541 (178 7/8)	4541 (178 7/8)	4539 (178 3/4)	4536 (178 5/8)
B Ylens	1072 (42 1/4)	950 (37 1/2)	871 (34 3/8)	792 (31 1/4)	713 (28 1/8)	634 (25)	555 (21 7/8)	476 (18 3/4)	397 (15 5/8)	317 (12 1/2)	238 (9 3/8)	159 (6 3/8)	79 (3 1/8)	0 (0)	–79 (–3 1/8)	–159 (–6 3/8)
D TD	4571 (180)	4567 (179 7/8)	4565 (179 3/4)	4562 (179 5/8)	4559 (179 5/8)	4556 (179 1/2)	4554 (179 3/8)	4551 (179 1/4)	4549 (179 1/8)	4547 (179 1/8)	4545 (179)	4543 (178 7/8)	4542 (178 7/8)	4541 (178 7/8)	4540 (178 3/4)	4539 (178 3/4)
C dVoff	0 (0)	0 (0)	0 (0)	0 (0)	5 (7/32)	12 (1/2)	18 (29/32)	24 (31/32)	30 (1 3/16)	36 (1 7/16)	43 (1 3/4)	49 (1 15/16)	55 (2 1/4)	62 (2 1/2)	68 (2 3/4)	74 (3)

When using the 170 inch screen

Unit: mm (inches)

a TA (deg)	13.6°	12°	11°	10°	9°	8°	7°	6°	5°	4°	3°	2°	1°	0°	–1°	–2°
E Xlens	4717 (185 3/4)	4742 (186 3/4)	4756 (187 3/8)	4769 (187 7/8)	4780 (188 1/4)	4790 (188 5/8)	4798 (189)	4805 (189 1/4)	4810 (189 3/8)	4815 (189 5/8)	4818 (189 3/4)	4820 (189 3/4)	4820 (189 7/8)	4820 (189 3/4)	4818 (189 3/4)	4815 (189 5/8)
B Ylens	1139 (44 7/8)	1008 (39 3/4)	925 (36 1/2)	841 (33 1/8)	757 (29 7/8)	673 (26 1/2)	589 (23 1/4)	505 (20)	421 (16 5/8)	337 (13 3/8)	253 (10)	168 (6 5/8)	84 (3 3/8)	0 (0)	–84 (–3 3/8)	–168 (–6 5/8)
D TD	4852 (191 1/8)	4848 (190 7/8)	4845 (190 7/8)	4843 (190 3/4)	4840 (190 5/8)	4837 (190 1/2)	4834 (190 3/8)	4831 (190 1/4)	4829 (190 1/8)	4826 (190 1/8)	4824 (190)	4823 (189 7/8)	4821 (189 7/8)	4820 (189 3/4)	4819 (189 3/4)	4818 (189 3/4)
C dVoff	0 (0)	0 (0)	0 (0)	0 (0)	6 (1/4)	12 (1/2)	19 (3/4)	25 (1)	32 (1 5/16)	39 (1 9/16)	45 (1 13/16)	52 (2 1/8)	59 (2 3/8)	65 (2 5/8)	72 (2 7/8)	79 (3 1/8)

When using the 180 inch screen

Unit: mm (inches)

a TA (deg)	13.6°	12°	11°	10°	9°	8°	7°	6°	5°	4°	3°	2°	1°	0°	–1°	–2°
E Xlens	4993 (196 5/8)	5020 (197 3/4)	5035 (198 1/4)	5049 (198 7/8)	5060 (199 1/4)	5070 (199 5/8)	5079 (200)	5086 (200 1/4)	5092 (200 1/2)	5097 (200 3/4)	5100 (200 7/8)	5102 (200 7/8)	5103 (201)	5102 (200 7/8)	5100 (200 7/8)	5097 (200 7/8)
B Ylens	1205 (47 1/2)	1067 (42 1/8)	979 (38 5/8)	890 (35 1/8)	802 (31 5/8)	713 (28 1/8)	624 (24 5/8)	535 (21 1/8)	446 (17 5/8)	356 (14 1/8)	267 (10 5/8)	178 (7 1/8)	89 (3 5/8)	0 (0)	–89 (–3 5/8)	–178 (–7 1/8)
D TD	5137 (202 1/4)	5132 (202 1/8)	5130 (202)	5127 (201 7/8)	5123 (201 3/4)	5120 (201 5/8)	5117 (201 1/2)	5114 (201 3/8)	5112 (201 1/4)	5109 (201 1/4)	5107 (201 1/8)	5105 (201)	5104 (201)	5102 (200 7/8)	5101 (200 7/8)	5100 (200 7/8)
C dVoff	0 (0)	0 (0)	0 (0)	0 (0)	6 (1/4)	13 (17/32)	20 (13/16)	27 (1 1/8)	34 (1 3/8)	41 (1 5/8)	48 (1 15/16)	55 (2 1/4)	62 (2 1/2)	69 (2 3/4)	76 (3)	84 (3 3/8)

When using the 190 inch screen

Unit: mm (inches)

a TA (deg)	13.6°	12°	11°	10°	9°	8°	7°	6°	5°	4°	3°	2°	1°	0°	–1°	–2°
E Xlens	5268 (207 1/2)	5297 (208 5/8)	5313 (209 1/4)	5327 (209 3/4)	5339 (210 1/4)	5349 (210 5/8)	5359 (211)	5366 (211 3/8)	5372 (211 5/8)	5377 (211 3/4)	5381 (211 7/8)	5383 (212)	5384 (212)	5383 (212)	5381 (211 7/8)	5378 (211 3/4)
B Ylens	1272 (50 1/8)	1126 (44 3/8)	1033 (40 3/4)	939 (37)	846 (33 3/8)	752 (29 5/8)	658 (26)	564 (22 1/4)	470 (18 5/8)	376 (14 7/8)	282 (11 1/8)	188 (7 1/2)	94 (3 3/4)	0 (0)	–94 (–3 3/4)	–188 (–7 1/2)
D TD	5419 (213 3/8)	5415 (213 1/4)	5412 (213 1/8)	5409 (213)	5406 (212 7/8)	5402 (212 3/4)	5399 (212 5/8)	5396 (212 1/2)	5393 (212 3/8)	5390 (212 1/4)	5388 (212 1/4)	5386 (212 1/8)	5385 (212)	5383 (212)	5382 (212)	5381 (211 7/8)
C dVoff	0 (0)	0 (0)	0 (0)	0 (0)	6 (1/4)	14 (9/16)	21 (27/32)	28 (1 1/8)	36 (1 7/16)	43 (1 3/4)	51 (2 1/8)	58 (2 3/8)	65 (2 5/8)	73 (2 7/8)	81 (3 1/4)	88 (3 1/2)

When using the 200 inch screen

Unit: mm (inches)

a TA (deg)	13.6°	12°	11°	10°	9°	8°	7°	6°	5°	4°	3°	2°	1°	0°	–1°	–2°
E Xlens	5543 (218 1/4)	5573 (219 1/2)	5590 (220 1/8)	5605 (220 3/4)	5618 (221 1/4)	5629 (221 5/8)	5638 (222)	5646 (222 3/8)	5653 (222 5/8)	5658 (222 7/8)	5662 (223)	5664 (223)	5665 (223 1/8)	5664 (223)	5662 (223)	5658 (222 7/8)
B Ylens	1338 (52 3/4)	1185 (46 3/4)	1087 (42 7/8)	988 (39)	890 (35 1/8)	791 (31 1/4)	692 (27 1/4)	593 (23 3/8)	495 (19 1/2)	396 (15 5/8)	297 (11 3/4)	198 (7 7/8)	99 (4)	0 (0)	–99 (–4)	–198 (–7 7/8)
D TD	5702 (224 1/2)	5697 (224 3/8)	5694 (224 1/4)	5691 (224 1/8)	5688 (224)	5684 (223 7/8)	5680 (223 3/4)	5677 (223 5/8)	5674 (223 1/2)	5672 (223 3/8)	5669 (223 1/4)	5667 (223 1/8)	5665 (223 1/8)	5664 (223)	5663 (223)	5662 (223)
C dVoff	0 (0)	0 (0)	0 (0)	0 (0)	7 (9/32)	14 (9/16)	22 (7/8)	30 (1 3/16)	38 (1 1/2)	45 (1 13/16)	53 (2 1/8)	61 (2 1/2)	69 (2 3/4)	77 (3 1/8)	85 (3 3/8)	93 (3 3/4)

When using the 210 inch screen

Unit: mm (inches)

a TA (deg)	13.6°	12°	11°	10°	9°	8°	7°	6°	5°	4°	3°	2°	1°	0°	–1°	–2°
E Xlens	5816 (229)	5847 (230 1/4)	5865 (231)	5881 (231 5/8)	5894 (232 1/8)	5906 (232 5/8)	5916 (233)	5924 (233 1/4)	5931 (233 5/8)	5937 (233 3/4)	5941 (234)	5943 (234)	5944 (234 1/8)	5943 (234)	5941 (234)	5937 (233 3/4)
B Ylens	1404 (55 3/8)	1243 (49)	1140 (45)	1037 (40 7/8)	934 (36 7/8)	830 (32 3/4)	726 (28 5/8)	623 (24 5/8)	519 (20 1/2)	415 (16 3/8)	311 (12 1/4)	208 (8 1/4)	104 (4 1/8)	0 (0)	–104 (–4 1/8)	–208 (–8 1/4)
D TD	5983 (235 5/8)	5978 (235 3/8)	5975 (235 1/4)	5972 (235 1/8)	5968 (235)	5964 (234 7/8)	5960 (234 3/4)	5957 (234 5/8)	5954 (234 1/2)	5951 (234 3/8)	5949 (234 1/4)	5947 (234 1/8)	5945 (234 1/8)	5943 (234)	5942 (234)	5941 (234)
C dVoff	0 (0)	0 (0)	0 (0)	0 (0)	7 (9/32)	15 (19/32)	23 (29/32)	31 (1 1/4)	39 (1 9/16)	47 (1 7/8)	56 (2 1/4)	64 (2 5/8)	72 (2 7/8)	81 (3 1/4)	89 (3 5/8)	97 (3 7/8)

When using the 220 inch screen

Unit: mm (inches)

a TA (deg)	13.6°	12°	11°	10°	9°	8°	7°	6°	5°	4°	3°	2°	1°	0°	–1°	–2°
E Xlens	6093 (239 7/8)	6126 (241 1/4)	6144 (242)	6161 (242 5/8)	6175 (243 1/8)	6187 (243 5/8)	6197 (244)	6206 (244 3/8)	6213 (244 5/8)	6219 (244 7/8)	6223 (245)	6226 (245 1/8)	6226 (245 1/8)	6226 (245 1/8)	6223 (245 1/8)	6219 (244 7/8)
B Ylens	1471 (58)	1302 (51 3/8)	1194 (47 1/8)	1086 (42 7/8)	978 (38 5/8)	870 (34 3/8)	761 (30)	652 (25 3/4)	544 (21 1/2)	435 (17 1/4)	326 (12 7/8)	217 (8 5/8)	109 (4 3/8)	0 (0)	–109 (–4 3/8)	–217 (–8 5/8)
D TD	6268 (246 7/8)	6262 (246 5/8)	6259 (246 1/2)	6256 (246 3/8)	6252 (246 1/4)	6248 (246)	6244 (245 7/8)	6240 (245 3/4)	6237 (245 5/8)	6234 (245 1/2)	6232 (245 3/8)	6229 (245 1/4)	6227 (245 1/4)	6226 (245 1/8)	6224 (245 1/8)	6223 (245)
C dVoff	0 (0)	0 (0)	0 (0)	0 (0)	7 (9/32)	16 (21/32)	25 (1)	33 (1 5/16)	41 (1 5/8)	50 (2)	59 (2 3/8)	67 (2 3/4)	76 (3)	84 (3 3/8)	93 (3 3/4)	102 (4 1/8)

List of the Projection Distance by Angle of Optical Axis

When using the 230 inch screen

Unit: mm (inches)

a TA (deg)	13.6°	12°	11°	10°	9°	8°	7°	6°	5°	4°	3°	2°	1°	0°	−1°	−2°
E Xlens	6345	6380	6399	6416	6431	6443	6454	6463	6471	6477	6481	6484	6485	6484	6481	6477
	(249 7/8)	(251 1/4)	(252)	(252 5/8)	(253 1/4)	(253 3/4)	(254 1/8)	(254 1/2)	(254 7/8)	(255)	(255 1/4)	(255 3/8)	(255 3/8)	(255 3/8)	(255 1/4)	(255 1/8)
B Ylens	1533	1356	1244	1131	1019	906	793	679	566	453	340	226	113	0	−113	−226
	(60 3/8)	(53 1/2)	(49)	(44 5/8)	(40 1/8)	(35 3/4)	(31 1/4)	(26 3/4)	(22 3/8)	(17 7/8)	(13 1/2)	(9)	(4 1/2)	(0)	(−4 1/2)	(−9)
D TD	6528	6522	6519	6515	6511	6507	6503	6499	6496	6493	6490	6488	6486	6484	6482	6481
	(257)	(256 7/8)	(256 3/4)	(256 5/8)	(256 3/8)	(256 1/4)	(256 1/8)	(255 7/8)	(255 3/4)	(255 5/8)	(255 5/8)	(255 1/2)	(255 3/8)	(255 3/8)	(255 1/4)	(255 1/4)
C dVoff	0	0	0	0	7	16	25	34	43	52	61	70	79	88	97	106
	(0)	(0)	(0)	(0)	(9/32)	(21/32)	(1)	(1 3/8)	(1 3/4)	(2 1/8)	(2 1/2)	(2 7/8)	(3 1/8)	(3 1/2)	(3 7/8)	(4 1/4)

When using the 240 inch screen

Unit: mm (inches)

a TA (deg)	13.6°	12°	11°	10°	9°	8°	7°	6°	5°	4°	3°	2°	1°	0°	−1°	−2°
E Xlens	6600	6635	6655	6673	6689	6702	6713	6723	6730	6737	6741	6744	6744	6744	6741	6737
	(259 7/8)	(261 1/4)	(262 1/8)	(262 3/4)	(263 3/8)	(263 7/8)	(264 3/8)	(264 3/4)	(265)	(265 1/4)	(265 1/2)	(265 1/2)	(265 5/8)	(265 1/2)	(265 1/2)	(265 1/4)
B Ylens	1594	1410	1294	1177	1059	942	824	707	589	471	353	236	118	0	−118	−236
	(62 7/8)	(55 5/8)	(51)	(46 3/8)	(41 3/4)	(37 1/8)	(32 1/2)	(27 7/8)	(23 1/4)	(18 5/8)	(14)	(9 3/8)	(4 3/4)	(0)	(−4 3/4)	(−9 3/8)
D TD	6789	6784	6780	6776	6772	6768	6763	6760	6756	6753	6750	6748	6746	6744	6742	6741
	(267 3/8)	(267 1/8)	(267)	(266 7/8)	(266 5/8)	(266 1/2)	(266 3/8)	(266 1/4)	(266)	(265 7/8)	(265 7/8)	(265 3/4)	(265 5/8)	(265 1/2)	(265 1/2)	(265 1/2)
C dVoff	0	0	0	0	7	17	26	35	44	54	63	73	82	92	101	111
	(0)	(0)	(0)	(0)	(9/32)	(11/16)	(1 1/16)	(1 7/16)	(1 3/4)	(2 1/4)	(2 1/2)	(2 7/8)	(3 1/4)	(3 5/8)	(4)	(4 3/8)

When using the 250 inch screen

Unit: mm (inches)

a TA (deg)	13.6°	12°	11°	10°	9°	8°	7°	6°	5°	4°	3°	2°	1°	0°	−1°	−2°
E Xlens	6868	6905	6926	6944	6960	6974	6986	6996	7004	7010	7015	7017	7018	7018	7015	7010
	(270 3/8)	(271 7/8)	(272 3/4)	(273 1/2)	(274 1/8)	(274 5/8)	(275 1/8)	(275 1/2)	(275 3/4)	(276)	(276 1/4)	(276 3/8)	(276 3/8)	(276 3/8)	(276 1/4)	(276)
B Ylens	1659	1468	1346	1225	1102	980	858	735	613	490	368	245	123	0	−122	−245
	(65 3/8)	(57 7/8)	(53)	(48 1/4)	(43 1/2)	(38 5/8)	(33 7/8)	(29)	(24 1/4)	(19 3/8)	(14 1/2)	(9 3/4)	(4 7/8)	(0)	(−4 7/8)	(−9 3/4)
D TD	7065	7059	7055	7052	7047	7042	7038	7034	7031	7027	7024	7022	7019	7018	7016	7015
	(278 1/4)	(278)	(277 7/8)	(277 5/8)	(277 1/2)	(277 3/8)	(277 1/8)	(277)	(276 7/8)	(276 3/4)	(276 5/8)	(276 1/2)	(276 3/8)	(276 3/8)	(276 1/4)	(276 1/4)
C dVoff	0	0	0	0	7	17	27	37	46	56	66	76	86	96	106	116
	(0)	(0)	(0)	(0)	(9/32)	(11/16)	(1 1/8)	(1 1/2)	(1 13/16)	(2 1/4)	(2 5/8)	(3)	(3 1/2)	(3 7/8)	(4 1/4)	(4 5/8)

When using the 260 inch screen

Unit: mm (inches)

a TA (deg)	13.6°	12°	11°	10°	9°	8°	7°	6°	5°	4°	3°	2°	1°	0°	−1°	−2°
E Xlens	7158	7197	7218	7238	7254	7268	7281	7291	7300	7306	7311	7314	7315	7314	7311	7307
	(281 7/8)	(283 3/8)	(284 1/4)	(285)	(285 5/8)	(286 1/4)	(286 3/4)	(287 1/8)	(287 1/2)	(287 3/4)	(287 7/8)	(288)	(288)	(288)	(287 7/8)	(287 3/4)
B Ylens	1729	1530	1403	1276	1149	1022	894	766	639	511	383	255	128	0	−128	−255
	(68 1/8)	(60 1/4)	(55 1/4)	(50 1/4)	(45 1/4)	(40 1/4)	(35 1/4)	(30 1/4)	(25 1/4)	(20 1/8)	(15 1/8)	(10 1/8)	(5 1/8)	(0)	(−5 1/8)	(−10 1/8)
D TD	7364	7357	7353	7350	7345	7340	7335	7331	7328	7324	7321	7318	7316	7314	7312	7311
	(290)	(289 3/4)	(289 5/8)	(289 3/8)	(289 1/4)	(289)	(288 7/8)	(288 3/4)	(288 1/2)	(288 3/8)	(288 1/4)	(288 1/4)	(288 1/8)	(288)	(288)	(287 7/8)
C dVoff	0	0	0	0	8	18	29	39	48	59	69	79	90	99	110	120
	(0)	(0)	(0)	(0)	(11/32)	(23/32)	(1 3/16)	(1 9/16)	(1 15/16)	(2 3/8)	(2 3/4)	(3 1/8)	(3 5/8)	(4)	(4 3/8)	(4 3/4)

When using the 270 inch screen

Unit: mm (inches)

a TA (deg)	13.6°	12°	11°	10°	9°	8°	7°	6°	5°	4°	3°	2°	1°	0°	−1°	−2°
E Xlens	7445	7485	7508	7528	7545	7560	7572	7583	7592	7599	7604	7607	7608	7607	7604	7599
	(293 1/8)	(294 3/4)	(295 5/8)	(296 3/8)	(297 1/8)	(297 3/4)	(298 1/4)	(298 5/8)	(299)	(299 1/4)	(299 3/8)	(299 1/2)	(299 5/8)	(299 1/2)	(299 3/8)	(299 1/4)
B Ylens	1798	1591	1459	1327	1195	1062	930	797	664	531	399	266	133	0	−133	−266
	(70 7/8)	(62 3/4)	(57 1/2)	(52 1/4)	(47 1/8)	(41 7/8)	(36 5/8)	(31 1/2)	(26 1/4)	(21)	(15 3/4)	(10 1/2)	(5 1/4)	(0)	(−5 1/4)	(−10 1/2)
D TD	7659	7652	7648	7644	7639	7634	7629	7625	7621	7618	7614	7612	7609	7607	7605	7604
	(301 5/8)	(301 3/8)	(301 1/8)	(301)	(300 3/4)	(300 5/8)	(300 3/8)	(300 1/4)	(300 1/8)	(300)	(299 7/8)	(299 3/4)	(299 5/8)	(299 1/2)	(299 1/2)	(299 3/8)
C dVoff	0	0	0	0	9	19	30	40	51	61	72	82	93	104	114	125
	(0)	(0)	(0)	(0)	(3/8)	(3/4)	(1 3/16)	(1 5/8)	(2 1/8)	(2 1/2)	(2 7/8)	(3 1/4)	(3 3/4)	(4 1/8)	(4 1/2)	(5)

When using the 280 inch screen

Unit: mm (inches)

a TA (deg)	13.6°	12°	11°	10°	9°	8°	7°	6°	5°	4°	3°	2°	1°	0°	−1°	−2°
E Xlens	7726	7768	7792	7813	7830	7846	7859	7870	7879	7887	7892	7895	7896	7895	7892	7887
	(304 1/4)	(305 7/8)	(306 7/8)	(307 5/8)	(308 3/8)	(309)	(309 1/2)	(309 7/8)	(310 1/4)	(310 1/2)	(310 3/4)	(310 7/8)	(310 7/8)	(310 7/8)	(310 3/4)	(310 5/8)
B Ylens	1867	1651	1515	1378	1240	1103	965	827	689	552	414	276	138	0	−138	−276
	(73 1/2)	(65 1/8)	(59 3/4)	(54 3/8)	(48 7/8)	(43 1/2)	(38)	(32 5/8)	(27 1/4)	(21 3/4)	(16 3/8)	(10 7/8)	(5 1/2)	(0)	(−5 1/2)	(−10 7/8)
D TD	7948	7942	7938	7933	7928	7923	7918	7914	7910	7906	7903	7900	7897	7895	7893	7892
	(313)	(312 3/4)	(312 1/2)	(312 3/8)	(312 1/8)	(312)	(311 3/4)	(311 5/8)	(311 1/2)	(311 3/8)	(311 1/8)	(311 1/8)	(311)	(310 7/8)	(310 3/4)	(310 3/4)
C dVoff	0	0	0	0	9	20	31	42	53	64	75	86	97	108	119	130
	(0)	(0)	(0)	(0)	(3/8)	(13/16)	(1 1/4)	(1 11/16)	(2 1/8)	(2 5/8)	(3)	(3 1/2)	(3 7/8)	(4 3/8)	(4 3/4)	(5 1/8)

When using the 290 inch screen

Unit: mm (inches)

a TA (deg)	13.6°	12°	11°	10°	9°	8°	7°	6°	5°	4°	3°	2°	1°	0°	−1°	−2°
E Xlens	8011	8055	8079	8101	8119	8135	8149	8161	8170	8178	8183	8186	8187	8186	8183	8178
	(315 1/2)	(317 1/8)	(318 1/8)	(319)	(319 3/4)	(320 3/8)	(320 7/8)	(321 3/8)	(321 3/4)	(322)	(322 1/4)	(322 3/8)	(322 5/8)	(322 3/8)	(322 1/4)	(322)
B Ylens	1935	1712	1570	1428	1286	1143	1001	858	715	572	429	286	143	0	−143	−286
	(76 1/4)	(67 1/2)	(61 7/8)	(56 1/4)	(50 3/4)	(45)	(39 1/2)	(33 7/8)	(28 1/4)	(22 5/8)	(17)	(11 3/8)	(5 3/4)	(0)	(−5 3/4)	(−11 3/8)
D TD	8242	8235	8230	8226	8220	8215	8210	8206	8201	8198	8194	8191	8188	8186	8184	8183
	(324 1/2)	(324 1/4)	(324 1/8)	(323 7/8)	(323 3/4)	(323 1/2)	(323 1/4)	(323 1/8)	(323)	(322 3/4)	(322 5/8)	(322 1/2)	(322 1/2)	(322 3/8)	(322 1/4)	(322 1/4)
C dVoff	0	0	0	0	10	21	32	44	55	66	78	89	100	112	123	135
	(0)	(0)	(0)	(0)	(13/32)	(27/32)	(1 5/16)	(1 3/4)	(2 1/4)	(2 5/8)	(3 1/8)	(3 5/8)	(4)	(4 1/2)	(4 7/8)	(5 3/8)

When using the 300 inch screen

Unit: mm (inches)

a TA (deg)	13.6°	12°	11°	10°	9°	8°	7°	6°	5°	4°	3°	2°	1°	0°	−1°	−2°
E Xlens	8295	8340	8365	8388	8406	8423	8437	8449	8459	8467	8472	8476	8477	8476	8473	8467
	(326 5/8)	(328 3/8)	(329 3/8)	(330 1/4)	(331)	(331 5/8)	(332 1/4)	(332 3/4)	(333 1/8)	(333 3/8)	(333 5/8)	(333 3/4)	(333 3/4)	(333 3/4)	(333 5/8)	(333 3/8)
B Ylens	2004	1773	1626	1479	1331	1184	1036	888	740	592	444	296	148	0	−148	−296
	(79)	(69 7/8)	(64 1/8)	(58 1/4)	(52 1/2)	(46 5/8)	(40 7/8)	(35)	(29 1/4)	(23 3/8)	(17 1/2)	(11 3/4)	(5 7/8)	(0)	(−5 7/8)	(−11 3/4)
D TD	8533	8526	8522	8517	8511	8506	8501	8496	8491	8488	8484	8481	8478	8476	8474	8472
	(336)	(335 3/4)	(335 1/2)	(335 3/8)	(335 1/8)	(334 7/8)	(334 3/4)	(334 1/2)	(334 3/8)	(334 1/4)	(334 1/8)	(334)	(330 7/8)	(333 3/4)	(330 5/8)	(333 3/8)
C dVoff	0	0	0	0	11	22	34	45	57	69	80	92	104	116	128	139
	(0)	(0)	(0)	(0)	(7/16)	(7/8)	(1 3/8)	(1 13/16)	(2 1/4)	(2 3/4)	(3 1/4)	(3 5/8)	(4 1/8)	(4 5/8)	(5 1/8)	(5 1/2)

Index

A

ABG (Automatic Background) mode 68
ABL LINK 145
ABL LINK menu 74
Adjuster 19
Adjusting
- ABL level 74, 146
- AHP/DHP 87, 89
- AQP/DQP 87
- black level 126
- blanking 124
- blue lens focus and Scheimpflug 86
- blue magnetic focus 91
- blue registration 119
- CRT conversion angle 22
- each input signal fine 122
- gray level 127
- green centering 95
- green lens focus and Scheimpflug 81
- green CENT 95
- green KEY and PIN 100, 103
- green magnetic focus 87
- green registration 95
- green SIZE and LIN 96
- green SKEW and BOW 98
- magnetic focus fine 122
- picture quality 56, 129
- red lens focus and Scheimpflug 85
- red magnetic focus 90
- red registration 108
- registration fine 122
- RGB SHIFT 123
- RGB SIZE 123
- sub contrast 74, 146
- uniformity 91
- white balance 125
- white level 127

All Data Reset 139
All white mode 70

B

Blanking 124

C

Carrying the projector 6
Changing
- language 64
- polarity 20

Clamp setting 60
Connecting
- multiple projectors 30
- remote commander to the projector 45
- to external equipment directly 29
- using the signal interface switcher 32, 38

CRT timer 73

D

Data reset 138
Device control 70
Direct power on 69
Dynamic picture 57

E

Error codes 149
Expert mode 54

F,G

Factory Data Reset 138
5BNC mode 39, 41
FINE 128 Data Reset 138

H

Handle release levers 6

I, J, K

Index number 64, 141
INPUT INFO menu 65
INPUT MEM. OPTION menu 66
Input memory 65, 133
INPUT SETTING menu 59
Installation
- ceiling installation 14
- diagrams 12
- floor installation for front projection 12
- floor installation for rear projection 16
- procedures 5

Installing
- batteries to the remote commander 44
- optional interface board 30

Internal oscillation mode 72
Internal oscillation pattern 72
INT. OSC SETTING menu 72

L

LED window 148
Location and Function of
- Rear panel 24
- Remote Commander 46

M

Memory
- block 130
- structure 131

Menu operation 50
Menu modes 51

N

Normal Reset 138
Notes on screen
- available types of screen 11
- screen size 10
- with an aspect ratio other than 4:3 10

O

128 Data Reset 138
Opening the upper cover 18
Optical axis angle 17, 150
Operating timer 73

P, Q

PIC CTRL menu 55
PIC. ORBITING menu 71
Picture orbiting 71
Picture muting 62
PIC SETTING menu 57, 58
Polarity switch 20
Projector Suspension Support 8, 15
Pro-user mode 52

R

Remote commander
- battery installation 44
- location and function of keys 46
- preparation 42

Resetting the data 138

S

Saving the data
- memory block 130
- memory structure 131
- standard magnetic focus data 92
- standard registration data 121
- to the service block 132

Screen 10
Selecting
- input signal 122
- screen type 68, 125

Self-diagnosis function 148
Service Data Reset 138
Service mode 43, 53
SERVICE SETTING menu 68, 69, 70
SET INFO menu 68
SET SETTING menu 62, 63
Setting
- color system 57
- color temperature 59, 125
- comb filter 58
- component format 58
- DRC 59
- DRC level 59
- dynamic picture 57
- 5BNC mode 69
- index number 141
- normal defocus mode 69
- PJ. COM 70
- remote control detector 64
- RS-232C/422A 70
- Scan line shift 71
- SET UP level 57
- sync signal 60
- sync route 61
- vertical shift 60
- video lock 61
- white balance 125

Status 62

T

Test patterns 75, 76
TIMER menu 73
Tool 18

U

User mode 51, 63
Using
- handles 6
- menu 50

V

Variable range of optical axis angle 150
Ventilation hole 7
Video memory 55, 137

W

Warm-up 77
What is linked ABL function? 145
What is the AQP/DQP adjustment? 87
When the screen size is not mentioned in the tables 13

SECTION 2
SERVICE INFORMATION

2-1. CIRCUIT BOARDS LOCATION

2-1-1. Location 1

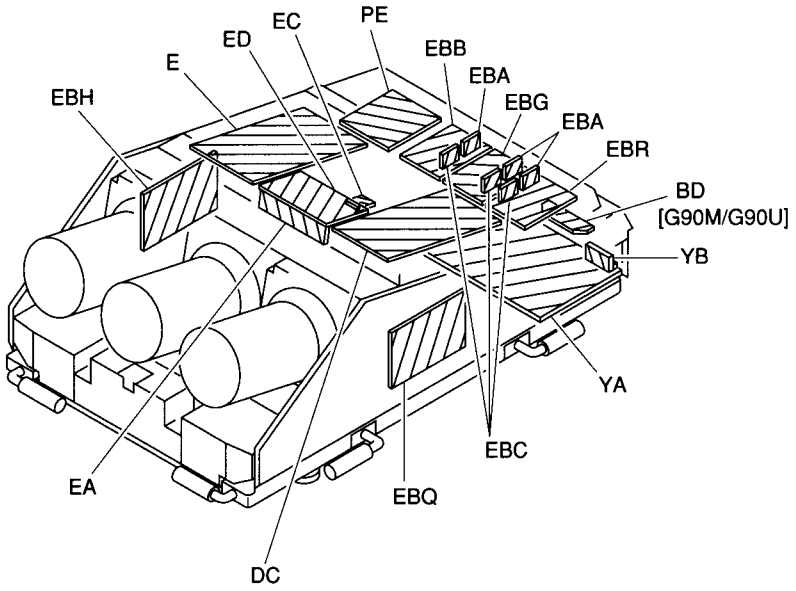

2-1-2. Location 2

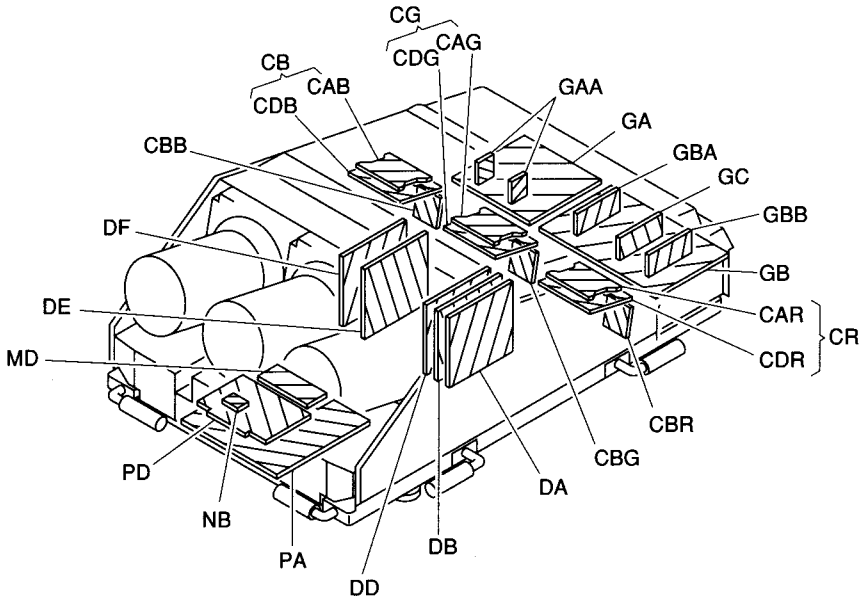

2-1-3. Location 3

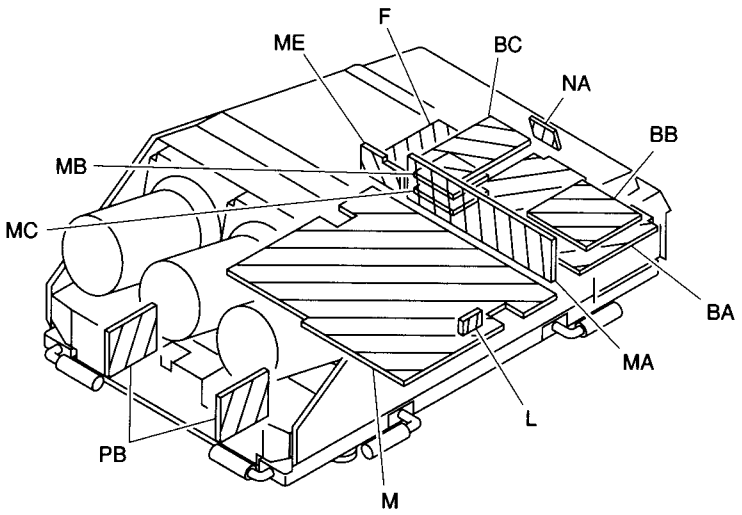

2-2. DISASSEMBLY

2-2-1. Hood Removal

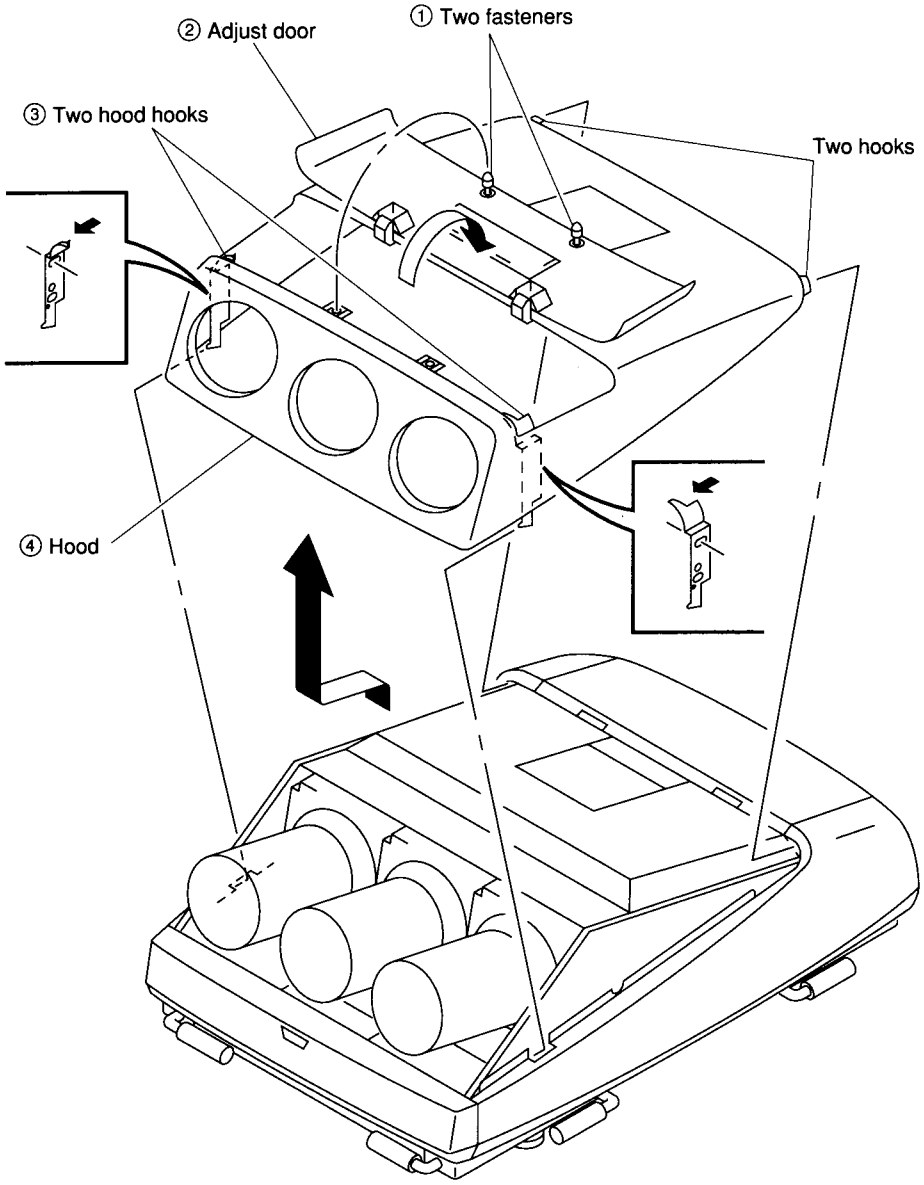

2-2-2. Cover Removal

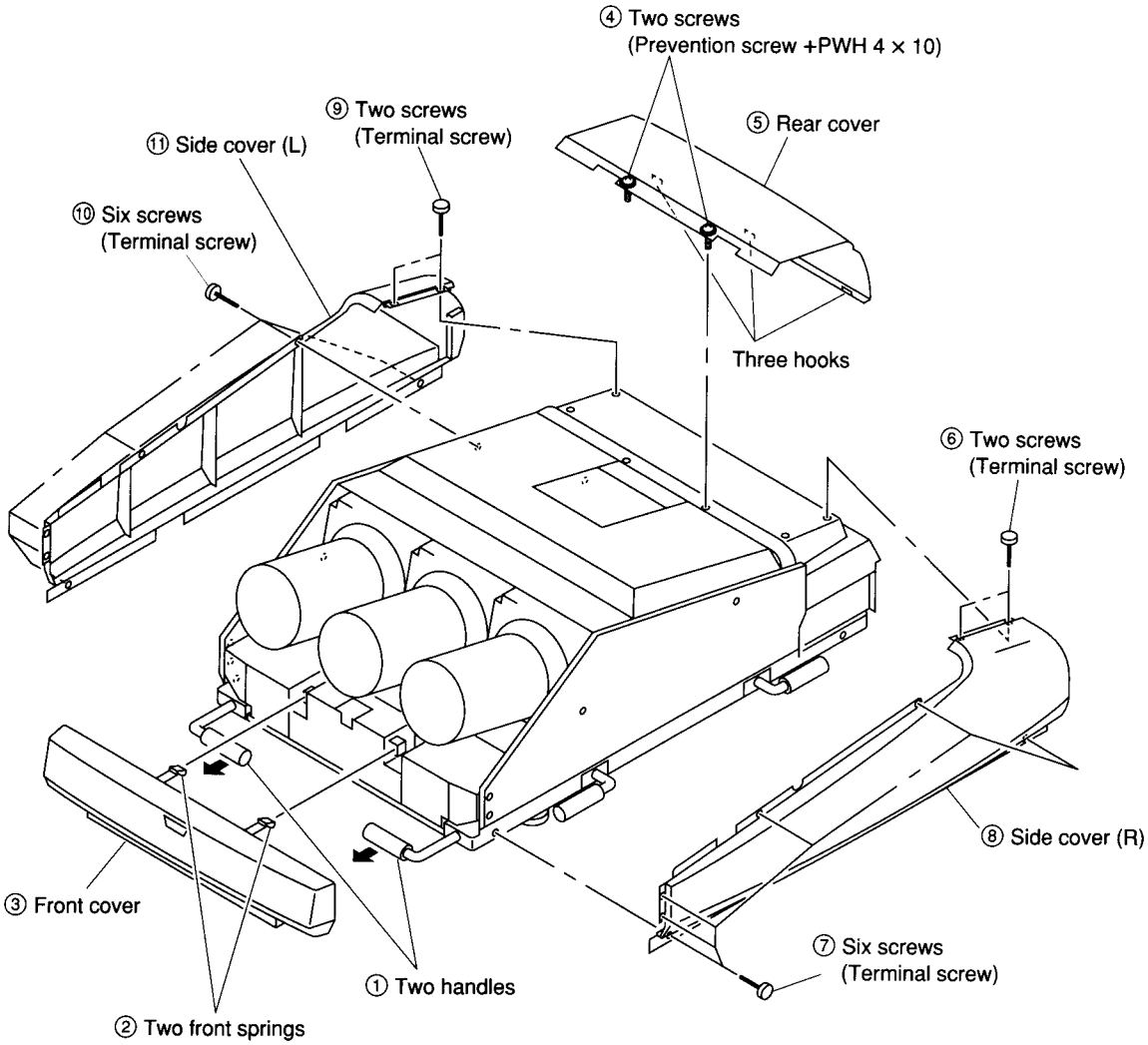

2-2-3. Opening ED Block

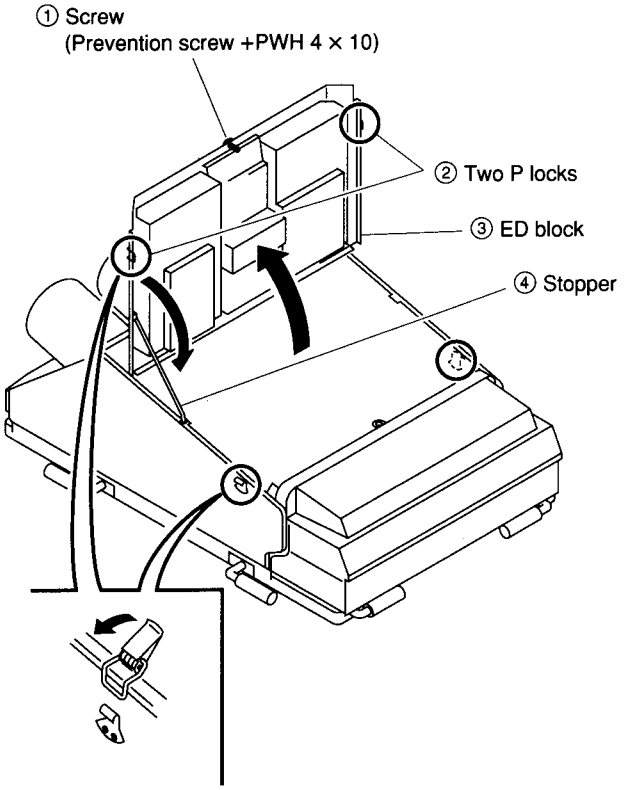

2-2-4. DC Board Removal

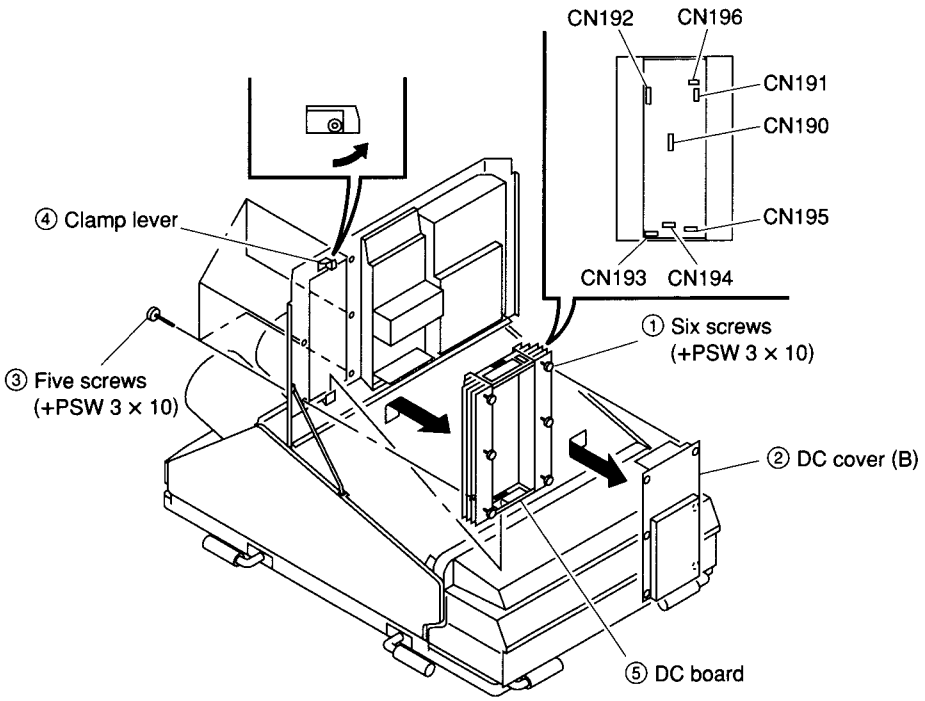

2-2-5. EC Board Removal

[CAUTION]
When installing the EC bracket, position all of the six toggle switch levers in the same direction.

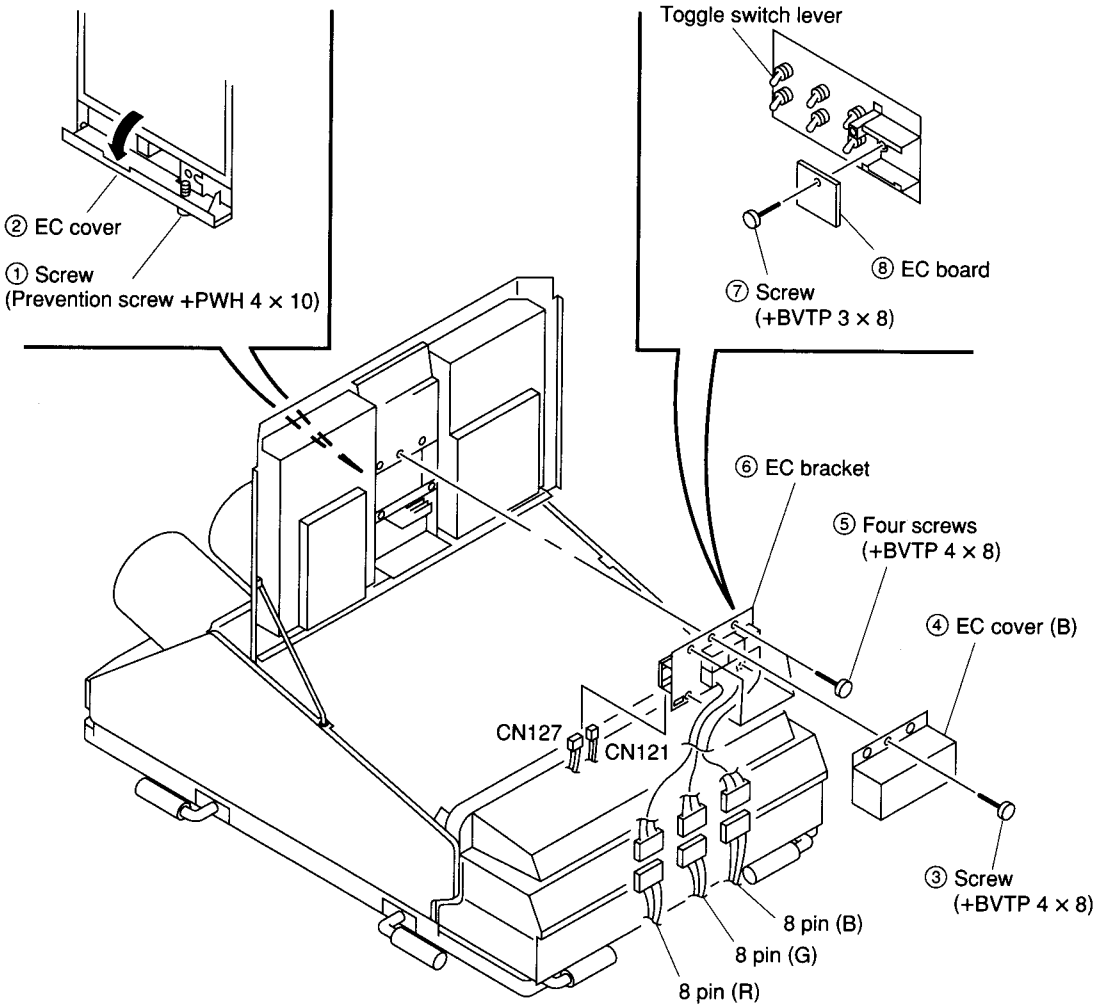

2-2-6. ED Board Removal

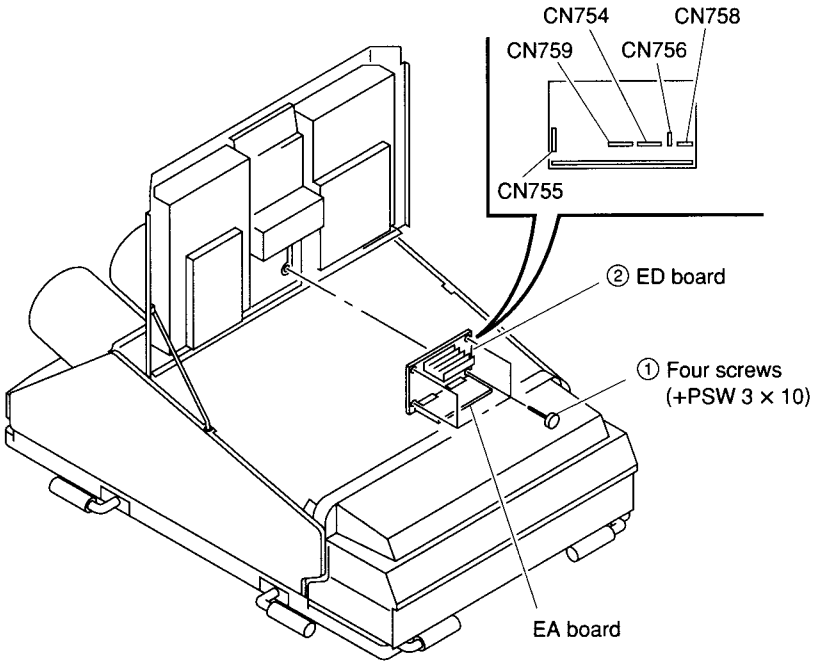

2-2-7. E Board Removal

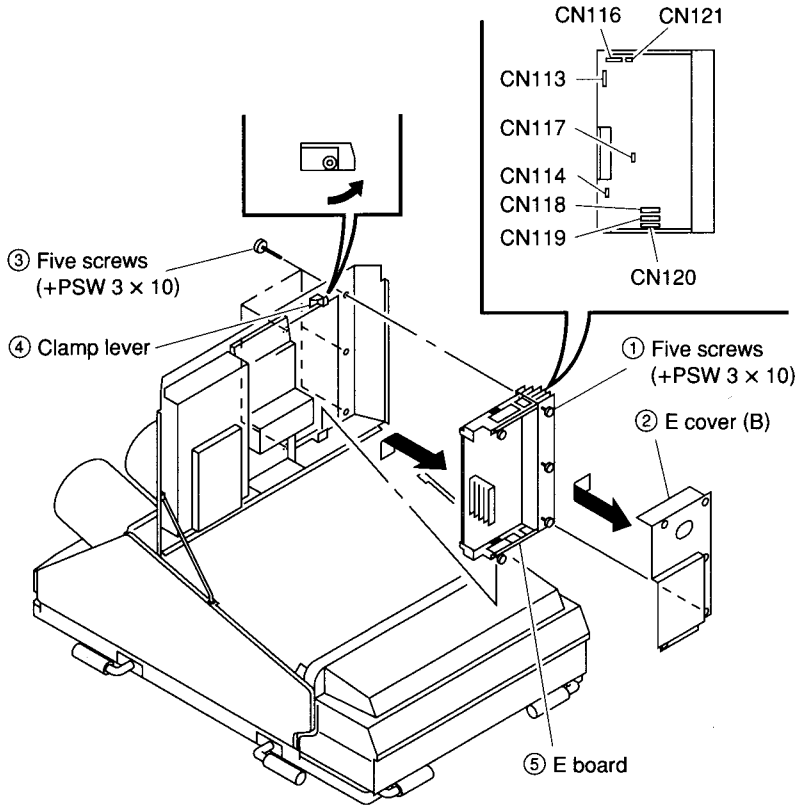

2-2-8. Remote Commander Removal

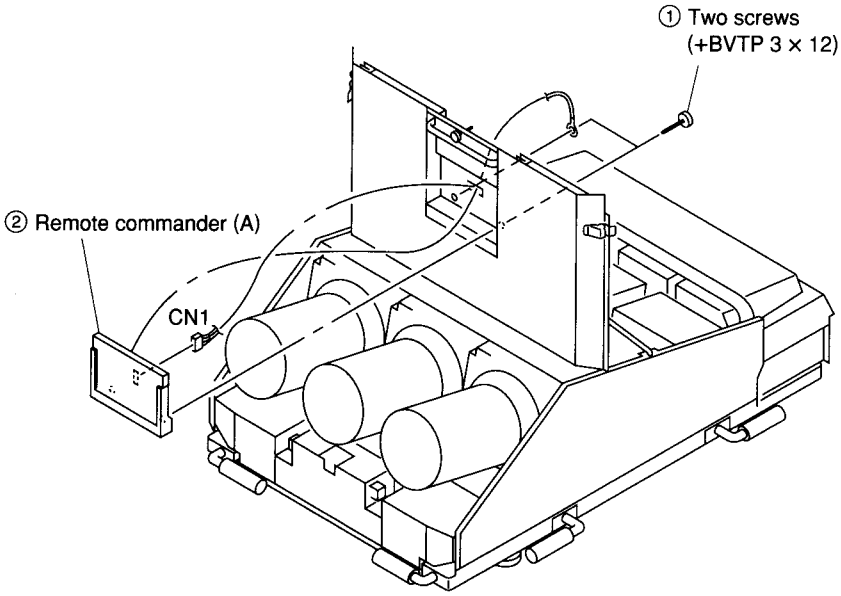

2-2-9. CB, CG and CR Blocks Removal

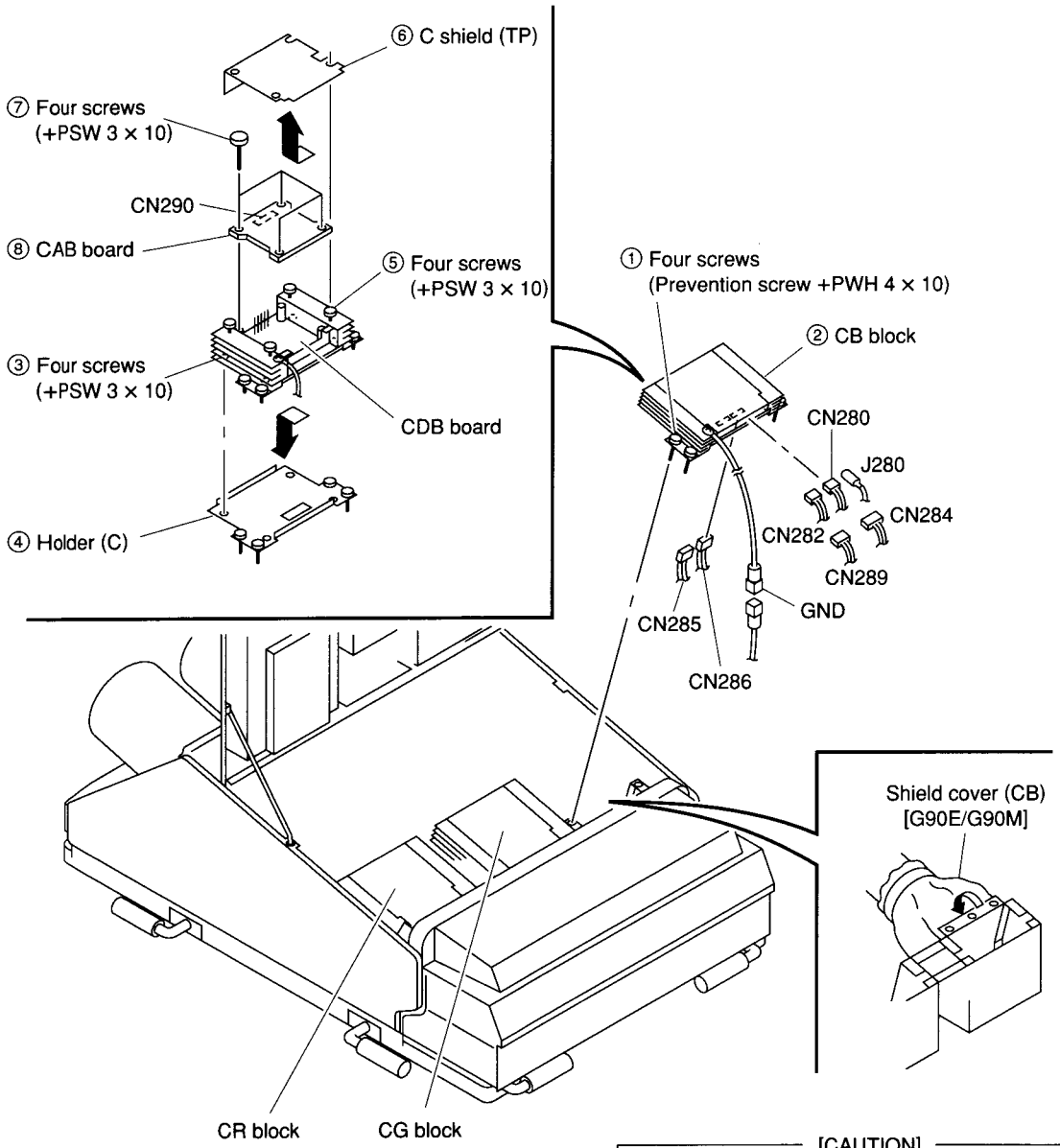

The CG and CR blocks can be removed in the same manner as the CB block.

[CAUTION]

When installing the CB block, fold the top side of the shield cover (CB) in the arrow direction.
[G90E/G90M]

2-2-10. DA, DB, DD, DE and DF Boards Removal

- Remove the CB, CG and CR blocks. (Refer to Section 2-2-9.)

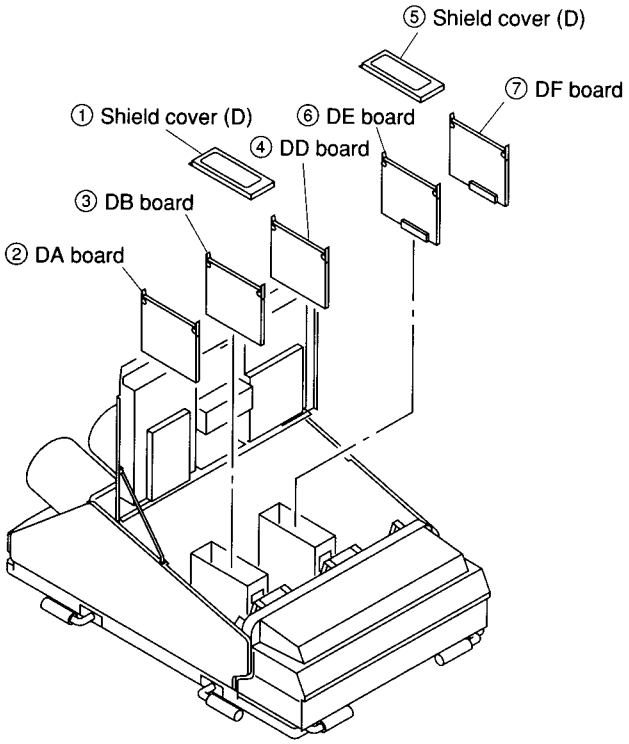

2-2-11. EBH and EBQ Boards Removal

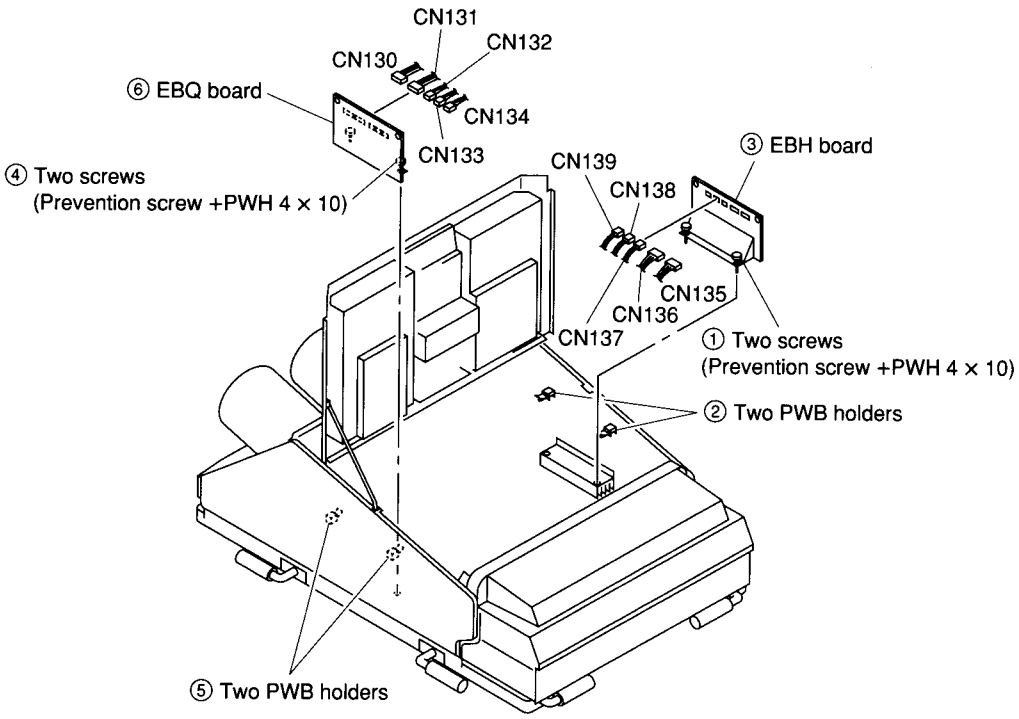

2-2-12. HVB Block and High-voltage Cable Removal

- Remove the picture tube (B) (Refer to Section 2-2-22.)

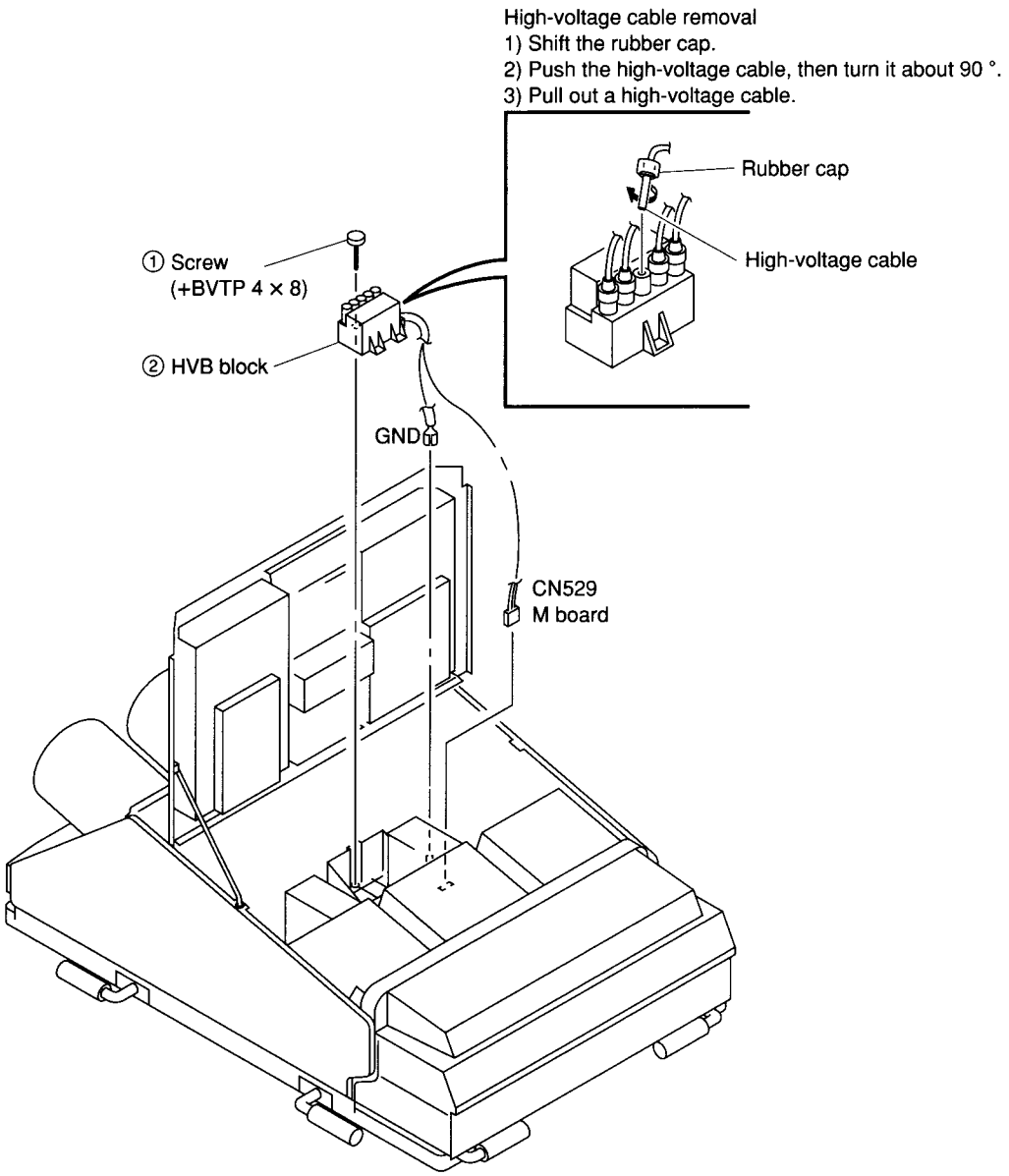

2-2-13. DC Fan Removal

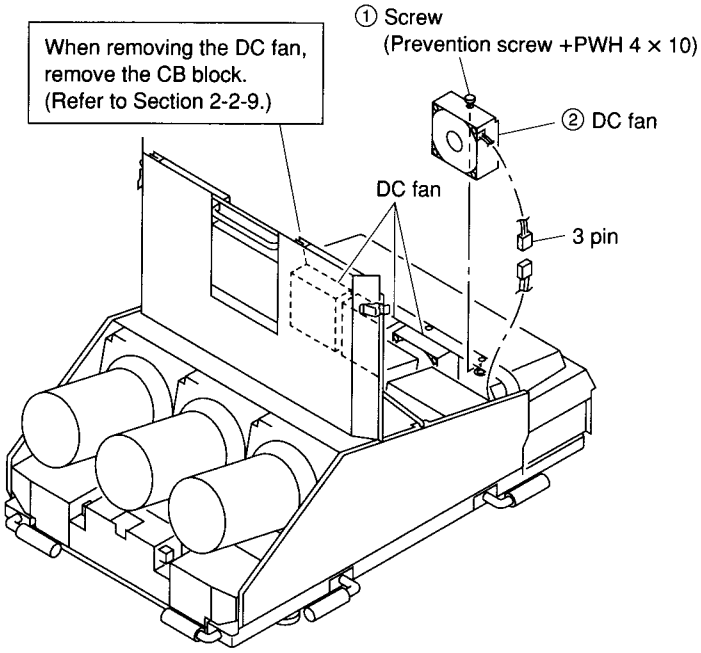

2-2-14. PA and PD Boards Removal

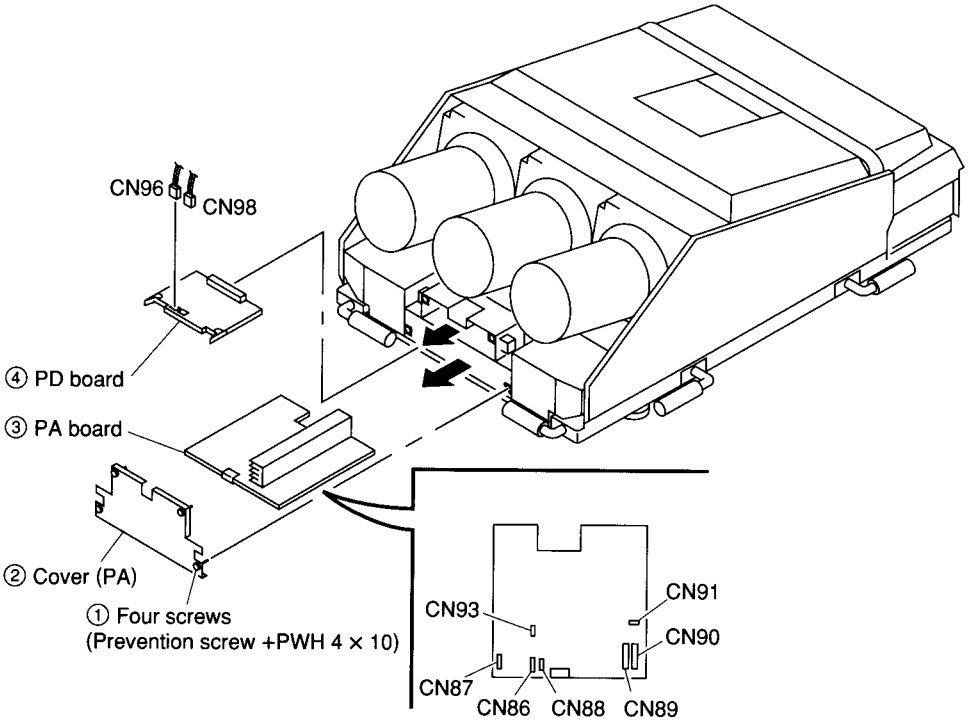

2-2-15. MD Board Removal

- Remove the PD board. (Refer to Section 2-2-14.)

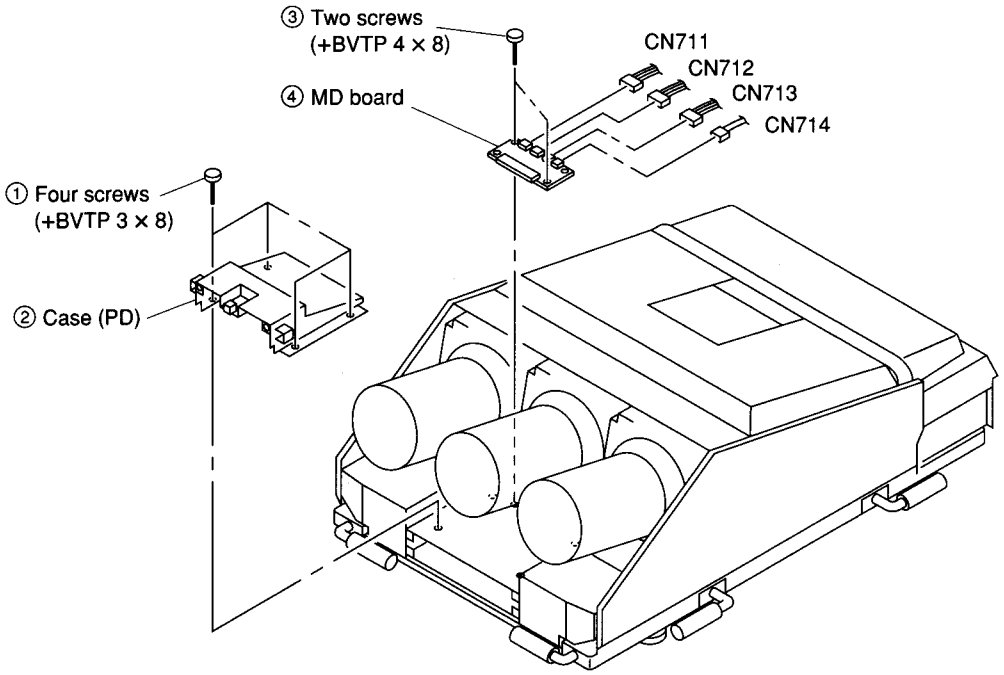

2-2-16. HVF Block Removal

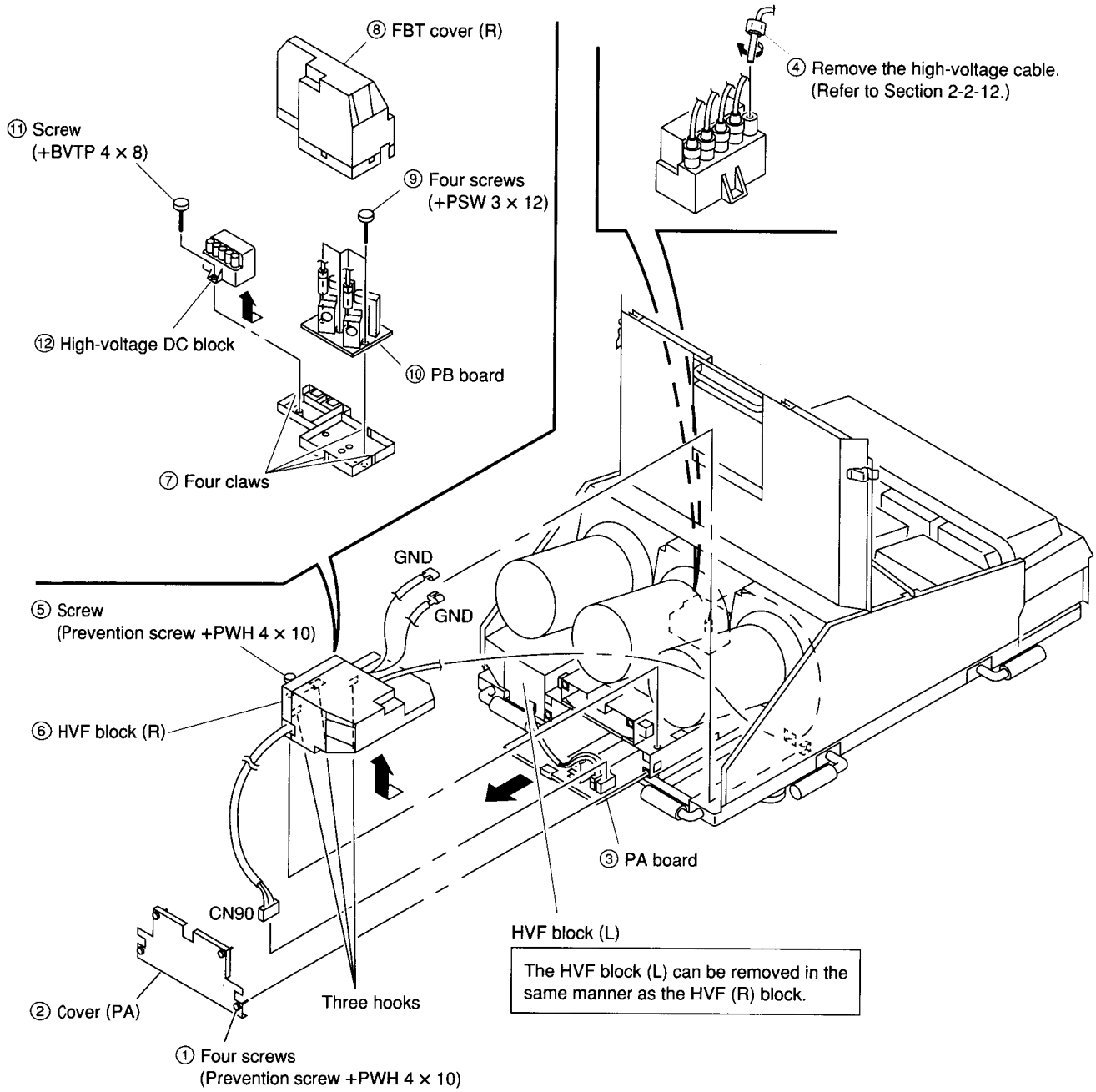

2-2-17. BA and YA Boards Removal

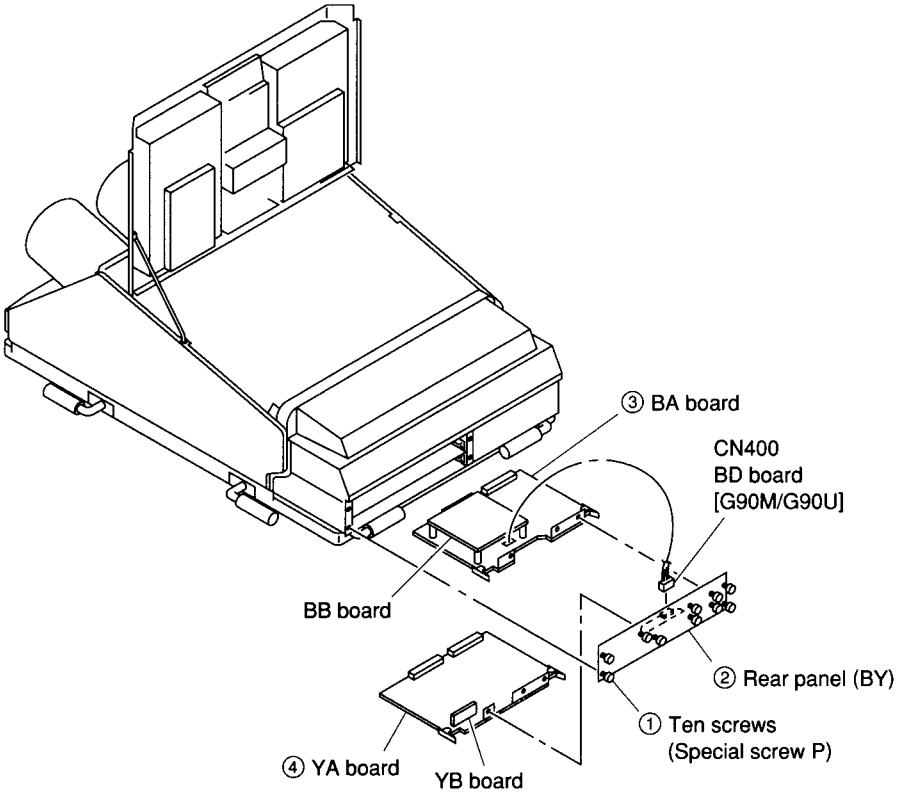

2-2-18. BC, F and ME Boards Removal

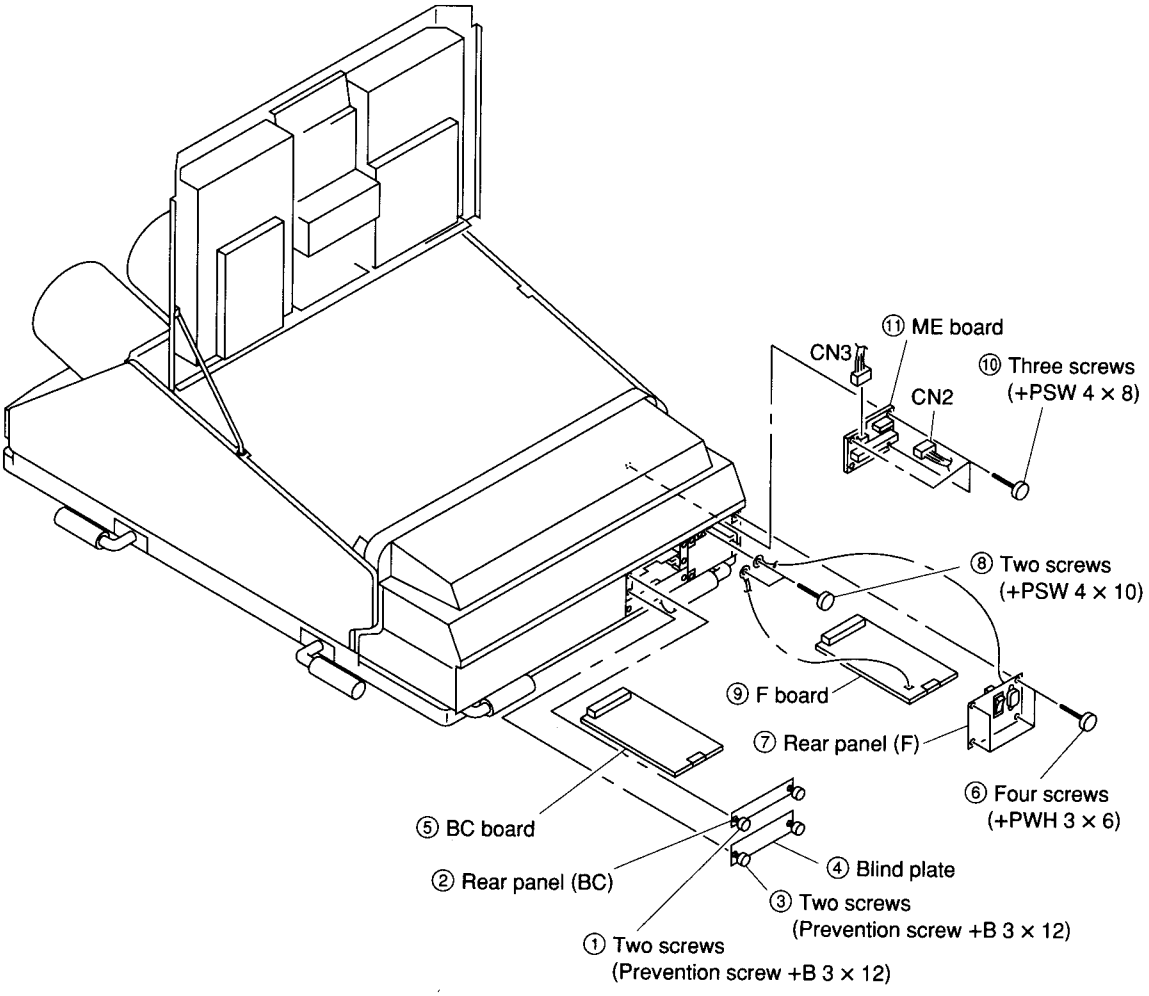

2-2-19. EBB, EBG, EBR and PE Boards Removal

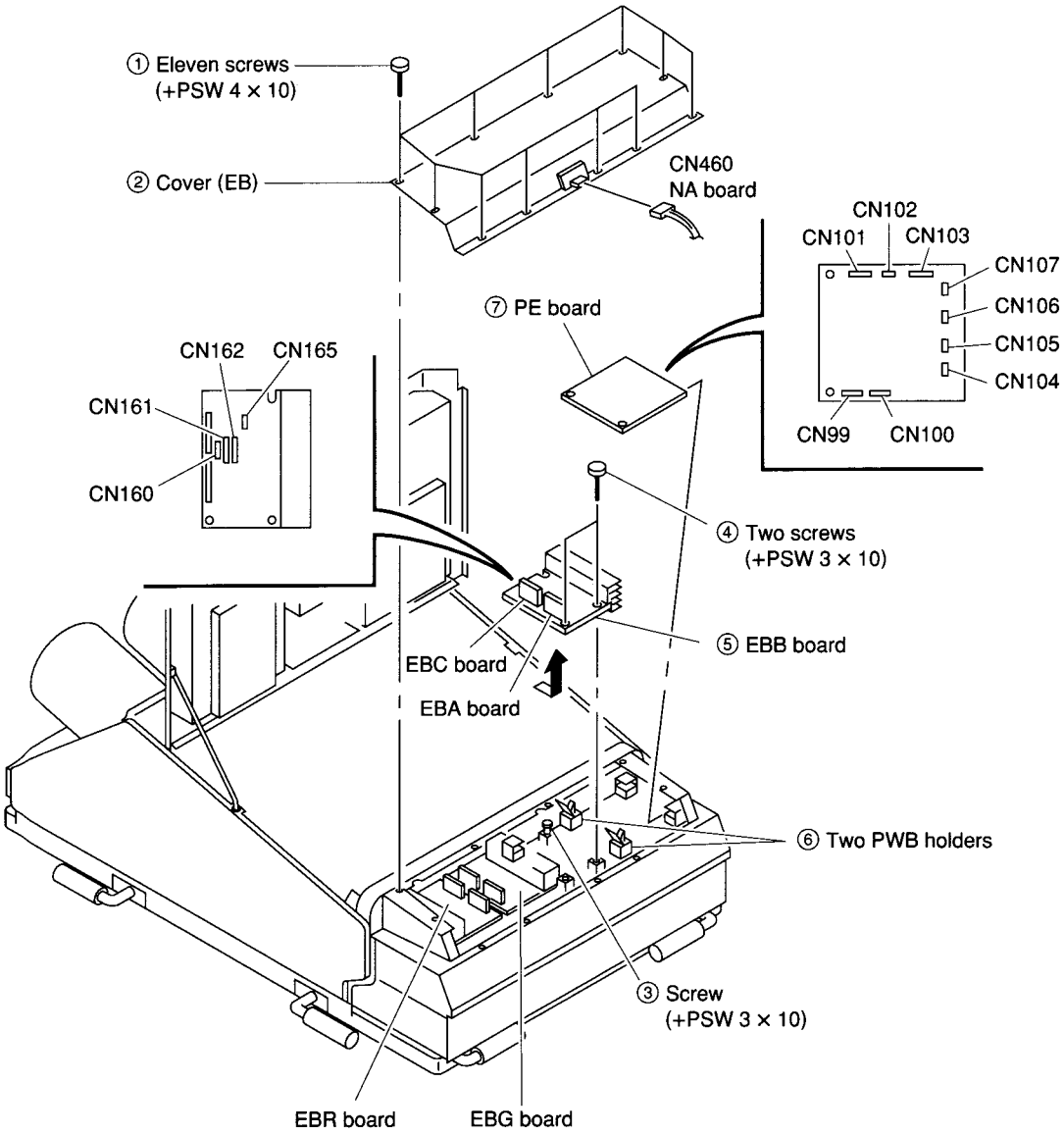

The EBG and EBR boards can be removed in the same manner as the EBB board.

2-2-20. GA and GB Boards Removal

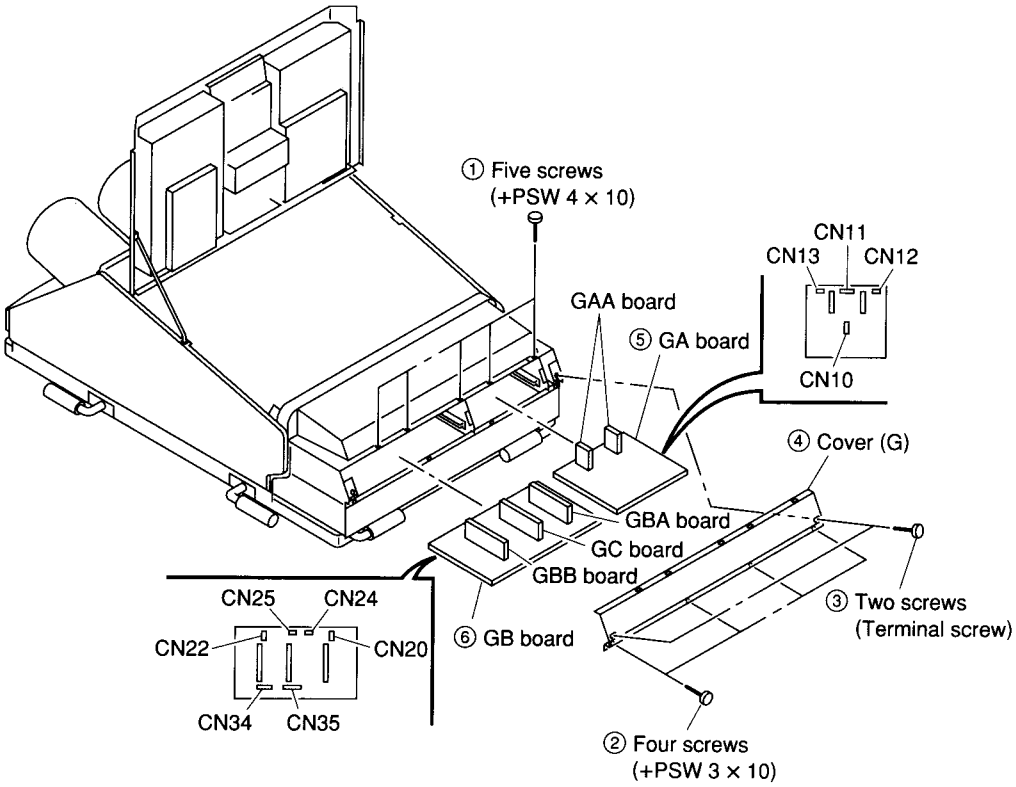

2-2-21. Lens Removal

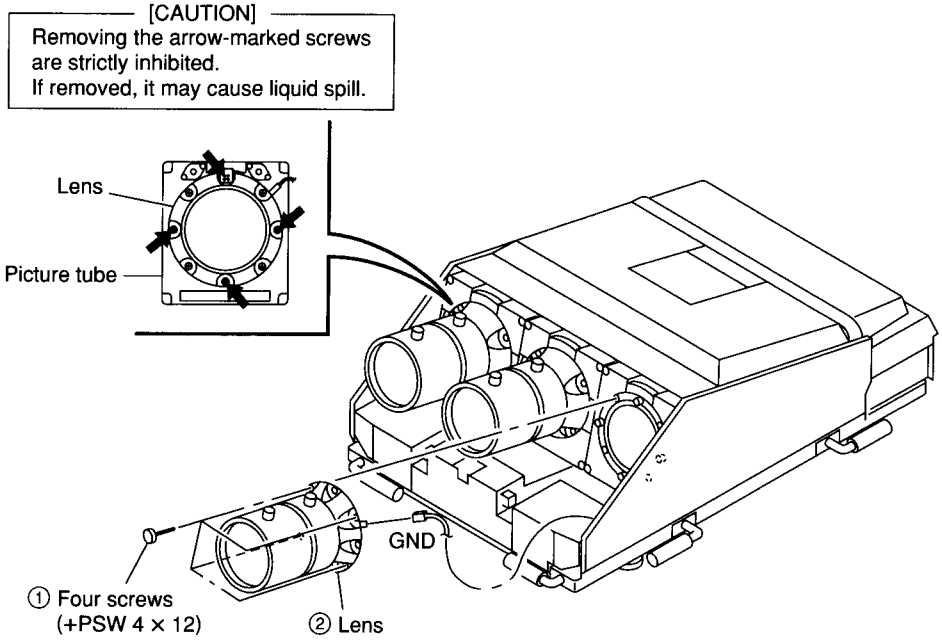

2-2-22. (1) Picture Tube Removal

- Remove the CB, CG and CR blocks.

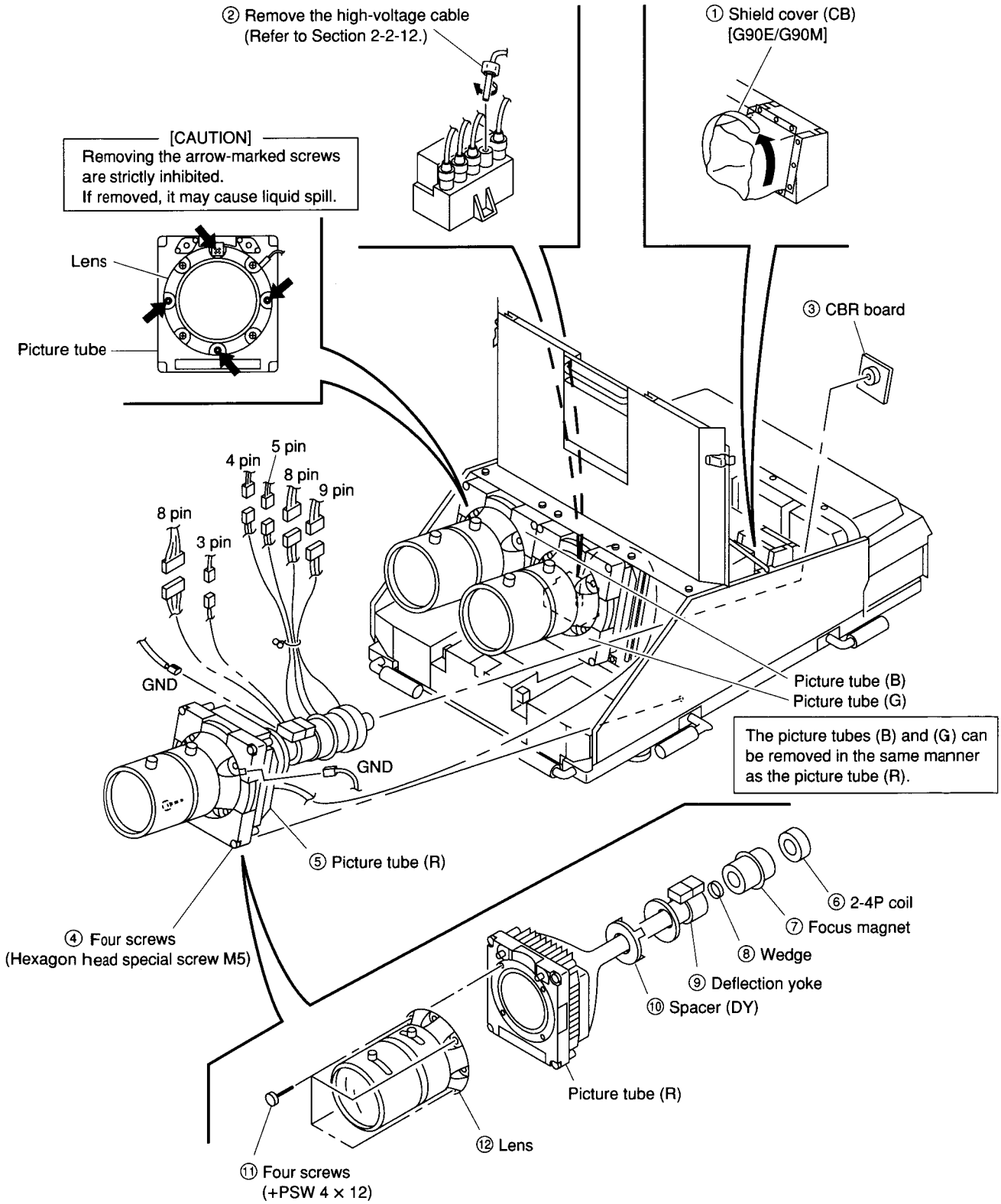

2-2-22. (2) Picture Tube Installation

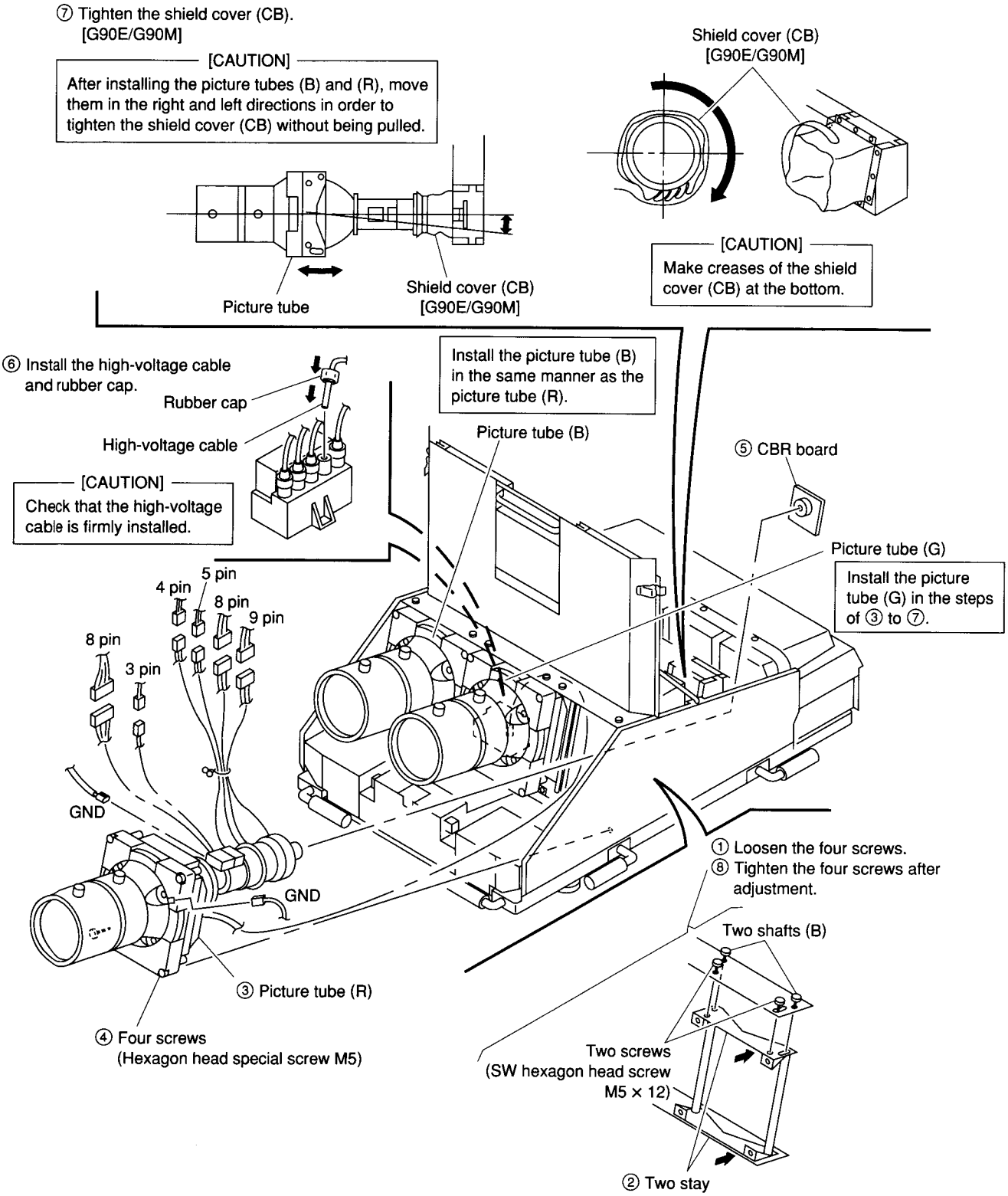

2-2-23. MA, MB and MC Boards Removal

1. Open the ED block and remove the harness. (Refer to Section 2-2-3 to 2-2-8.)
2. Remove the CB, CG and CR blocks. (Refer to Section 2-2-9.)
3. Remove the EBH and EBQ boards. (Refer to Section 2-2-11.)
4. Remove the DC fan. (Refer to Section 2-2-13.)
5. Remove the BA, F, and ME boards. (Refer to Section 2-2-17.)
6. Remove the BC and F boards. (Refer to Section 2-2-18.)
7. Remove the EBB, EBG, EBR and PE boards. (Refer to Section 2-2-19.)
8. Remove the GA and GB boards. (Refer to Section 2-2-20.)
9. Remove the three picture tubes. (Refer to Section 2-2-22.(1))

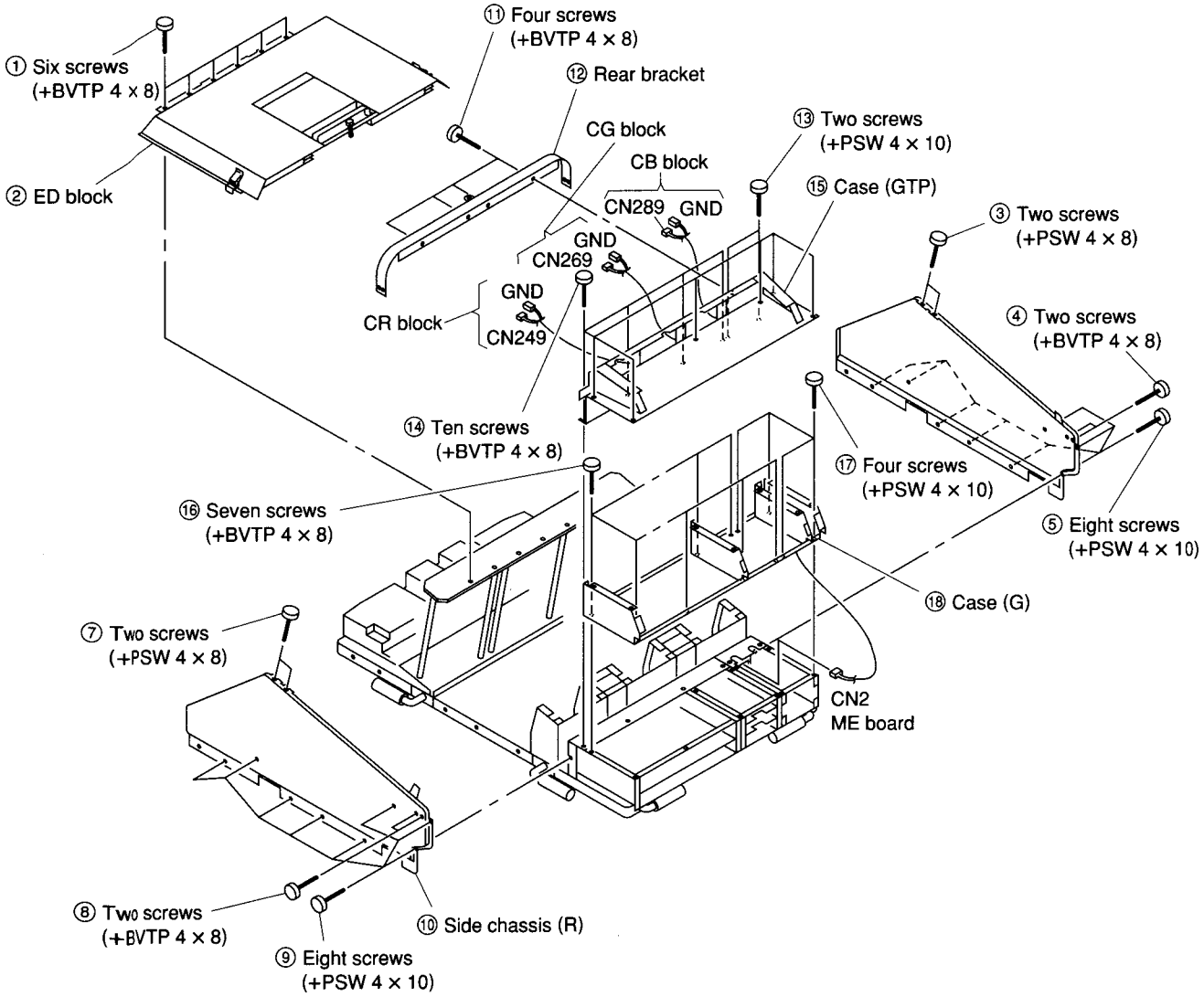

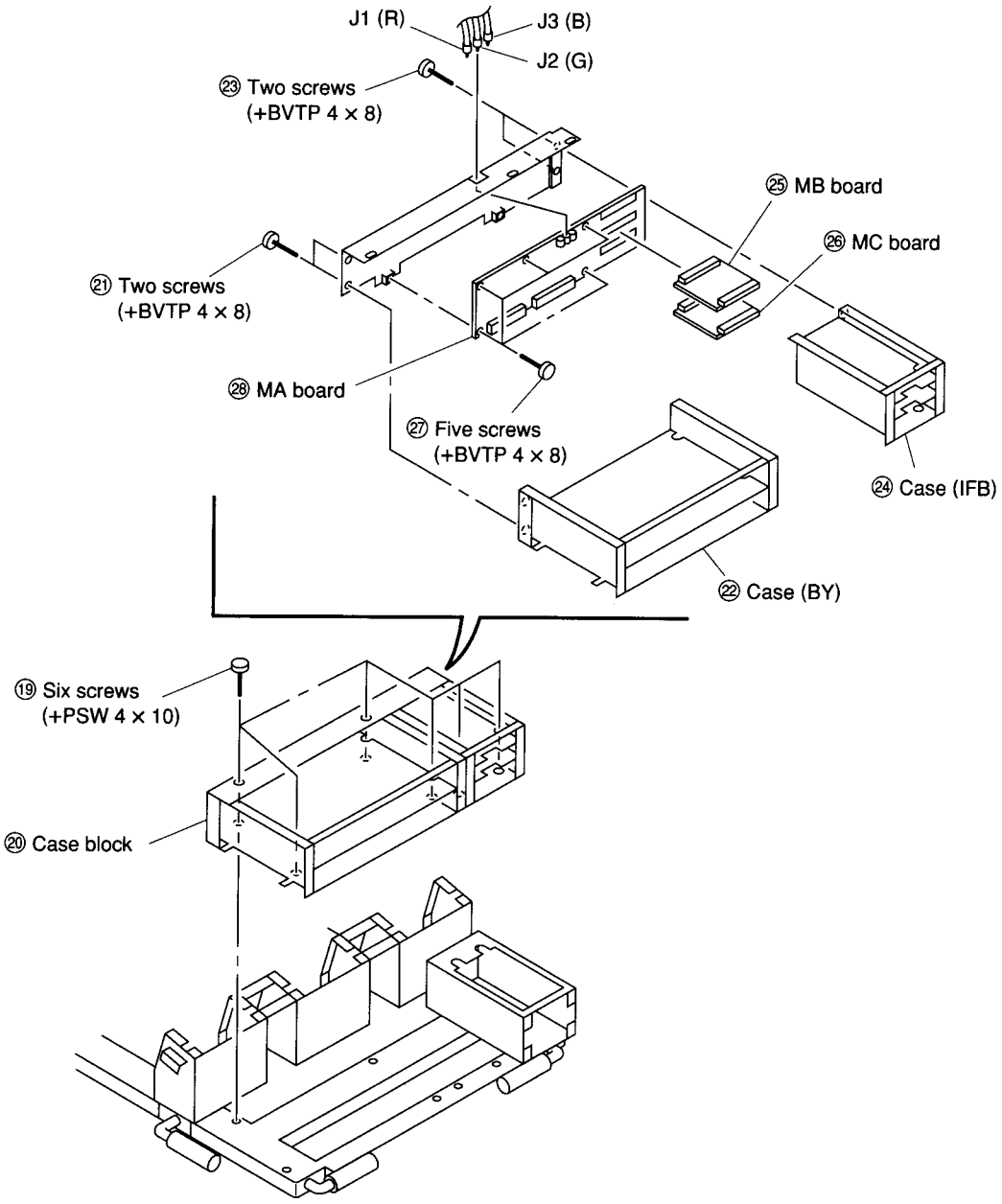
J1 (R)
J3 (B)
J2 (G)
㉓ Two screws
(+BVTP 4 x 8)
㉕ MB board
㉖ MC board
㉑ Two screws
(+BVTP 4 x 8)
㉘ MA board
㉗ Five screws
(+BVTP 4 x 8)
㉔ Case (IFB)
㉒ Case (BY)
⑲ Six screws
(+PSW 4 x 10)
⑳ Case block

2-2-24. M Board Removel

1. Remove the case block. (Refer to Section 2-2-23.)
2. Remove the DA, DB, DD, DE and DF boards. (Refer to Section 2-2-10.)
3. Remove the HVB block and high-voltage cable. (Refer to Section 2-2-12.)

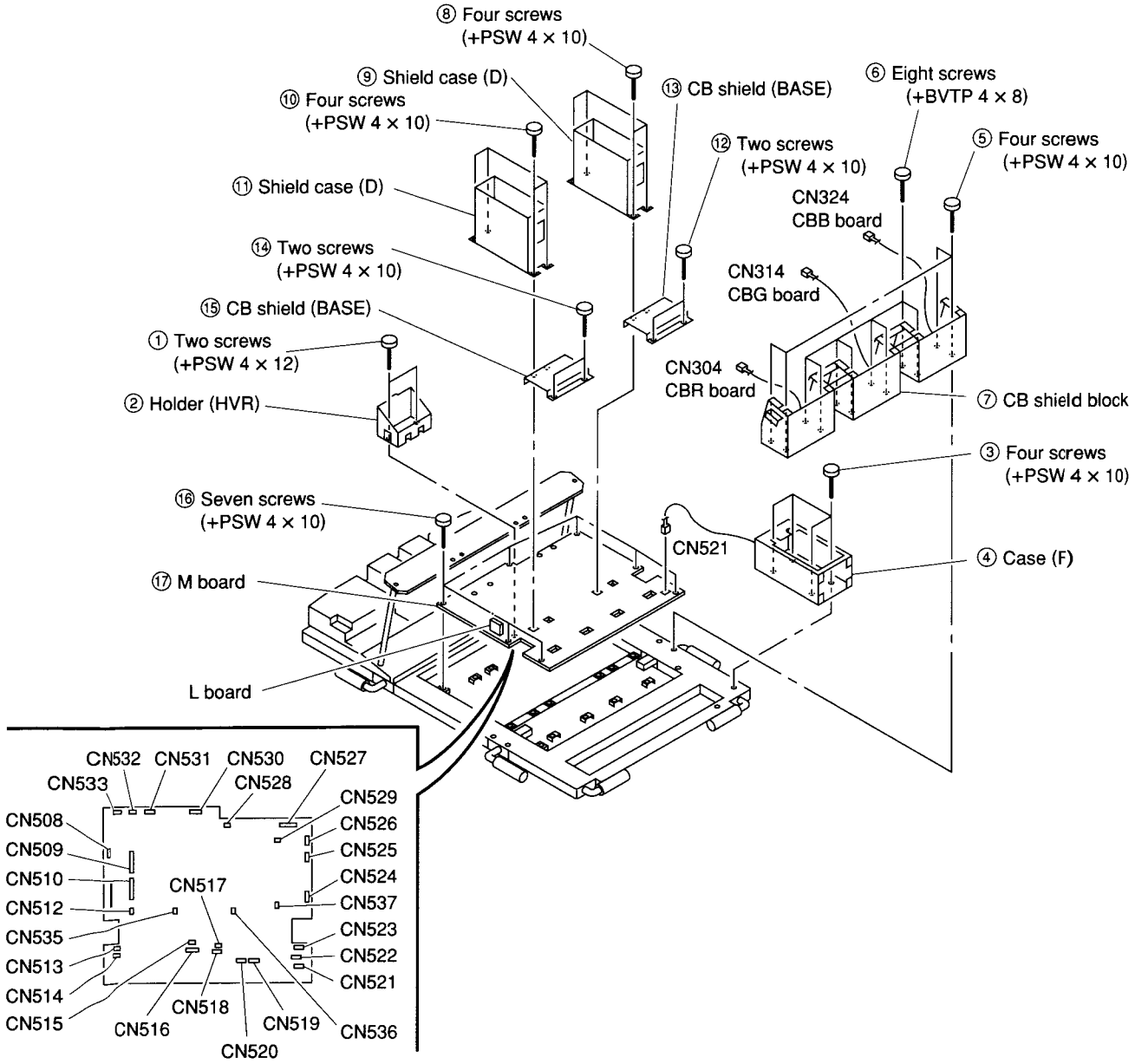

2-2-25. Extension Board

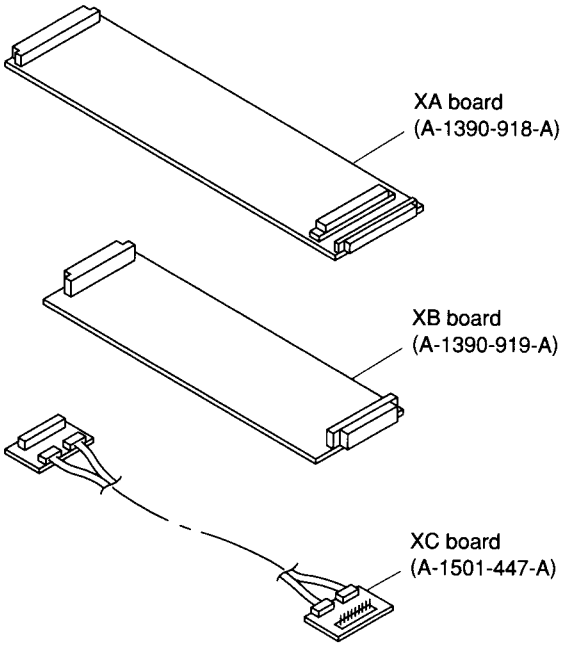

2-3. ERROR CODE

2-3-1. Warning Code on 7-Segment LED

Error no.	LED color	Note	Description
01	Green	Main CS incorrect	Check Sum of Main Program is incorrect. Main Program is not written correctly on Flash Memory. Upload Mode starts immediately after this error is displayed.
03	Green	Font CS incorrect	Check Sum of Font Data is incorrect. Upload Mode starts immediately after this error is displayed.
10	Green	Upload mode Start	Displayed when Upload mode starts. (Flash twice.)
11	Green	Upload data from Comm	Mode of uploading data from communication.
12	Green	Updata data to FM	Mode of writing data uploaded from communication on Flash Memory.
18	Green	Transport Error1	Transport Error (Upload Mode)
19	Green	Transport Error2	Transport Error: Start Code Low Byte Error (Upload Mode)
1A	Green	Transport Error3	Transport Error: Packet Length Error (Upload Mode)
1B	Green	Transport Error4	Transport Error: Data Length Error (Upload Mode)
1C	Green	Transport Error5	Transport Error: Header Check Sum Error (Upload Mode)
1D	Green	Transport Error6	Transport Error: Data Check Sum Error (Upload Mode)
1E	Green	Transport Error7	Transport Error: Data End Low Byte Error (Upload Mode)
1F	Green	Transport Error8	Transport Error: Data End High Byte Error (Upload Mode)
20	Green	Transport Error9	Transport Error: Invalid Error (Upload Mode)
21	Green	Transport Error10	Transport Error: Retry Occur (Upload Mode)
24	Green	Session Error	Session Error (Upload Mode)
2F	Green	Return to Normal	Upload Mode is finished. Return to Normal Mode.
30	Green	User NVM format not available !	User Domain NVM is not formatted.
31	Green	User NVM formatting...	User Domain NVM is being formatted.
32	Green	User NVM writing...	Data is being written on User Domain NVM.
33	Green	Service NVM format not available !	Service Domain NVM is not formatted.
34	Green	Service NVM formatting...	Service Domain NVM is being formatted.
35	Green	Service NVM writing...	Data is being written on Service Domain NVM.
36	Green	Factory NVM format not available !	Factory Domain NVM is not formatted.
37	Green	Factory NVM formatting...	Factory Domain NVM is being formatted.
38	Green	Factory NVM writing...	Data is being written on Factory Domain NVM.
3A	Green	Input memory changing...	Displayed when Input signals are considered unstable.
3B	Green	Now Power on delay waiting...	Waiting for ON in the "ON DELAY" mode.
40	Green	Configuring the system	System Setting is being performed.
41	Green	Same DEVICE INDEX for Projector detected	There are other projectors that have the same device index number.
42	Green	Same DEVICE INDEX for Switcher detected	There are other switchers that have the same device index number.
43	Green	Master Switcher not exist	There is no Master Switcher.

When any of these codes is output in the ON condition, the device cannot be in the Standby state.

2-3-2. Protector Code on 7-Segment LED

Error no.	LED color	Note	Description
60	Orange	Unknown	In this mode, the reason why the protect works is unknown. There is no way other than inspecting GA/GB board steadily or checking each protect detection line on YA board.
61	Orange	POW1	This protect works when the 200V line of the power source has dropped. Since this line is used only on PA board, the points to look into are GB/PA/L (it contains the power protect circuit)/M board.
62	Orange	POW2	This protect works when the 115 V line of the power source has dropped. This line is used on PA/PE/ED/CDR/CDG/CDB boards, therefore, the points to look into are these boards and GB, L and M boards. The past experiences tell that the defects were often found at the VIDEO PACK of C board.
63	Orange	POW3	This protect works when the 50 V line of the power source has dropped. This line is used on DC/EBR/EBG/EBB boards. There are two possible modes for which this protect works. One is the case of failure on the OUT circuit of the above boards. This case can be readily found out because the error code of each board is displayed simultaneously. Another case is caused by the excessive Reg/Mg compensation. In this case, it is necessary to look into whether the Reg/Mg compensation wave forms are normal. If they are abnormal, look into DA/DB/DD/DE board or YA board.
64	Orange	POW4	This protect works when the 15 V line of the power source has dropped. This line is used on most of boards. It is rare that this error is displayed alone. The error code is always displayed by any other board at the same time. If the error is displayed alone, look into GB/LM boards.
65	Orange	POL	This protect concerns with the polarity change. As the possible causes of error, the cover for polarity change is open or the connector in this line is disconnected.
66	Orange	H.STOP	This protect works when the horizontal deflection is inactivated. The most possible failure is H.OUT of E board. If not, failures might be found in H. Drive series or the negative power source series. Look into DA/EA/ED/PD board.
67	Orange	V.STOP	This protect works when the vertical deflection is inactivated. In most cases, inspection of DF board will solve the problem.
68	Orange	SUB	This error code comes from DC board. Failures around OUT/Reg might be considered. Refer to the protect items for POW3.
69	Orange	HV	This protect works when the high voltage rises high. Failures of PA board/PB board/HV BLOCK/HV FILTER might be considered. In some cases, the connector of the detection lines of HV BLOCK is disconnected.
6A	Orange	LOT	Failure around L.O.T. of the PE board.
6B	Orange	Ik	This protect works when the current excessively flows to the CRT of any of R, G and B. Since it is for protection from X-ray, it may be hardly activated. If indicated, look into BA board.
6C	Orange	ΣIk	This protect works when abnormality occurred in the CRT. If no defect is found in the CRT, look into PA/PB boards.
6D	Orange	FAN1	This protect works when any of four FANs attached at the rear of the unit stopped. In some cases, it is caused by the failure of FAN itself. In other cases, the connector is disconnected or the line materials are caught in.
6E	Orange	FAN2	This protect works when the FAN at the far end of PA board stopped.
6F	Orange	LENS	This protect works when the detection line attached to the LENS of any of R, G and B is disconnected. In some unusual cases, it works due to poor connection of the screw.
70	Orange	CRTR	This protect works when the current excessively flows to RED CRT. Look into CAR/CBR/CDR boards. If no defect is found, suspect RED CRT.
71	Orange	CRTG	This protect works when the current excessively flows to GREEN CRT. Look into CAG/CBG/CDG boards. If no defect is found, suspect GREEN CRT.
72	Orange	CRTB	This protect works when the current excessively flows to BLUE CRT. Look into CAB/CBB/CDB boards. If no defect is found, suspect BLUE CRT.
73	Orange	IFBB	This protect works with the defect of the board inserted into INPUT-B.
74	Orange	IFBC	This protect works with the defect of the board inserted into INPUT-C.

Error no.	LED color	Note	Description
80	Orange	BA	This protect works when the power line of BA board has dropped. Since this is included in the secondary troubleshooting for BA board, it does not usually work. However, for this unit, this protect is very sensitive and the error is displayed even with the trifle power drop. In such a case, look into GB board.
81	Orange	DA	This protect works when the power line of DA board has dropped. Since this is included in the secondary troubleshooting for DA board, it does not usually work.
82	Orange	DB	This protect works when the power line of DB board has dropped. Since this is included in the secondary troubleshooting for DB board, it does not usually work.
83	Orange	DD	This protect works when the power line of DD board has dropped. Since this is included in the secondary troubleshooting for DD board, it does not usually work.
84	Orange	DE	This protect works when the power line of DE board has dropped. Since this is included in the secondary troubleshooting for DE board, it does not usually work.
85	Orange	EBR	This error code comes from EBR board. Failures around OUT/Mg might be considered. Refer to the protect items for POW3.
86	Orange	EBG	This error code comes from EBG board. Failures around OUT/Mg might be considered. Refer to the protect items for POW3.
87	Orange	EBB	This error code comes from EBB board. Failures around OUT/Mg might be considered. Refer to the protect items for POW3.
88	Orange/Red	Initialize	Message during initialization. Software does not start up yet.
89	Orange	EBH	This error code comes from EBH board. Failures around OUT/Mg might be considered. Refer to the protect items for POW3.
8A	Orange	EBQ	This error code comes from EBQ board. Failures around OUT/Mg might be considered. Refer to the protect items for POW3.

When any of these codes is output, the device is set in the Standby state once, however it can be set in the ON state again.

2-3-3. Error Code on 7-Segment LED

Error no.	LED color	Note	Description
D0	Red	User NVM format not available !	User Domain NVM cannot be formatted. This NMV device itself might be destroyed.
D1	Red	User NVM wirte error !	Data cannot be written on User Domain NVM. This NMV device itself might be destroyed.
D2	Red	Service NVM format not available !	Service Domain NVM cannot be formatted. This NMV device itself might be destroyed.
D3	Red	Service NVM write error !	Data cannot be written on Service Domain NVM. This NMV device itself might be destroyed.
D4	Red	Factory NVM format not available !	Factory Domain NVM cannot be formatted. This NMV device itself might be destroyed.
D5	Red	Factory NVM write error !	Data cannot be written on Factory Domain NVM. This NMV device itself might be destroyed.

When any of these codes is displayed, the device cannot be in the ON state.

2-4. MEMORY ACCESS SYSTEM

2-4-1. Memory Structure

There are three memory areas-USER area, SERVICE area, and FACTORY area.

1. USER area
   Memory area always used in the market.
   Area in which data is saved when automatic saving or when the MEMORY key is pressed.
   <Contents of Memory Structure>
   SET MEMORY
   CH MEMORY
   INPUT MEMORY × 150 (Original + Custom)

   At shipment, data of the Original Input Memory (No. 0 to 12) when placed on the floor and front projected to a 120-inch screen is memorized in INPUT MEMORY.

2. SERVICE area
   Memory area used for backing up data set or adjusted on the market (user area).
   <Contents of Memory Structure>
   SET MEMORY
   CH MEMORY
   INPUT MEMORY ×150 (Original + Custom)

   Like the USER area, at shipment, data of the Original Input Memory (No. 0 to 12) is memorized in INPUT MEMORY.

3. FACTORY area
   Memory area for saving setting and adjustment data adjusted when placed on the floor and front projected to a 120-inch screen in the factory.
   The registration data value of INPUT MEMORY of this area is the Standard Data Save reference value.
   <Contents of Memory Structure>
   SET MEMORY
   CH MEMORY
   INPUT MEMORY ×13 (Original)

At shipment, the contents of the memory data in each memory area are the same.

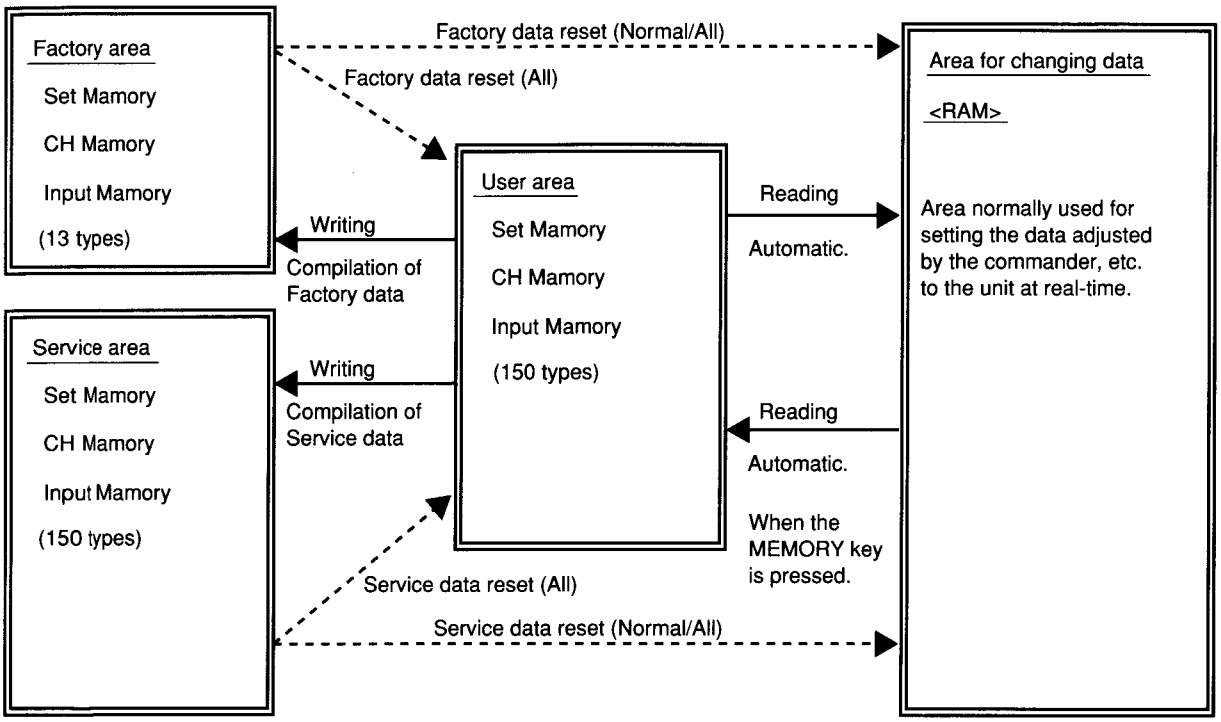

Fig. 1 Memory Area and Structure

2-4-2. Various Memory Data

The basic VPH-G90 memory structure and types are as follows.

- Set Memory
  - Setting Memory
  - Video Memory (1 to 10)
  - Color Temperature Memory (W/B)
  - Uniformity Memory
  - ABL Memory
  - DEVICE Memory
- Ch Memory
  - Set Ch Memory
  - Switcher Memory
- Input Memory (For 150 inputs)
  - <Original Memory : No. 0-12>
  - <Custom Memory : No. 13-149>

1. Set Memory

Memory for saving set and adjusted values which the unit has only one of each.

- Setting Memory
  Various setting values of the unit.

Items	Contents
Last CH	VIDEO/INPUT-A/INPUT-B/INPUT-C Sw'er
Set Serial No.	Unit's serial number
Operation Timer	Unit's total operating time
CRT Timer	CRT total operating time
USER MODE	Normal/PRO
Status	ON/OFF
Group INDEX	1-99
Device INDEX	0-99
SIRCS RECEIVER	FRONT&REAR/FRONT/REAR/ALL OFF
OSD Language	E/F/G/S/I/J/C
Baud Rate <PJ-COM>	38.4 k/19.2 k/9600
Baud Rate <RS-232C/422A>	38.4 k/19.2 k/9600
INPUT-MEMORY SEARCH MODE	AUTO/MANUAL
ALL WHITE MODE	0-99 min 0 min = All White Mode OFF
POWER SAVING MODE	ON/OFF
DIRECT POWER ON MODE	ON/OFF
ON DELAY MODE	ON/OFF
SCREEN SELECT	Screen B/Screen M
ABG MODE	ON/OFF
Normal Defocus MODE	ON/OFF
5BNC MODE	ON/OFF
PIC.ORBITING MODE	ON/OFF
SCAN LINE SHIFT MODE	ON/OFF
INT.OSC PATTERN	OSC1-OSC9
TEST PATTERN	OFF, TP1-TP13, TPU1-TPU5
COLOR UNIFORMITY MODE	OFF/STANDARD/MANUAL
BRIGHTNESS UNIFORMITY MODE	OFF/STANDARD/MANUAL
ABL LINK MODE	ON/OFF

Table 1. Setting memory

• Reading and writing of set memory other than video memory

Timing	Memory Type	Memory Area
When AC is ON	All set memories (Other than video memory)	Reads data from the set memory of the user area to the area changing various data (RAM), and sets the changes in the unit.

Table 2. Reading of Set Memory (Other than Video Memory) (Load)

Timing	Memory Type	Memory Area
When the MEMORY key is pressed	All set memories (Other than video memory)	Writes data in the area changing various data (RAM) to the set memory of the user area (Save).
When the input ch changes (When input instability is confirmed)		
When the input signal changes (When input instability is confirmed)		
When the mode of the unit changes		
When the power is turned off		

Table 3. Writing of Set Memory (Other than Video Memory) (Save)

• Video Memory

Various data of video memory setting values 1 to 10.

The data types in the respective setting values are the same.

VIDEO MEMORY OFF is inside INPUT MEMORY.

Items	Contents
Video Memory Label	ASCII character
Color Temprature Select	9300/6500/5400/3200/Custom
W/B Adjust Data of Custom	Gain/BiasCoarse/BiasFine/γ (for Adj R/G/B, Screen Sel)
Dynamic PICTURE	ON/OFF
V.SHIFT Select	WIDE/NARROW
NTSC Setup Select	0/7.5
COMPONENT FORMAT Select	SMPTE.EBU-N10/BETACAM7.5
COMB Filter Select	3D/3Line
DRC Level Select	High/Low
Picture Control Adjust Data	Contrast/Brightness/Color/Hue/Sharpness
RGB SIZE Adjust Data	Hc/Hf/Vc/Vf
RGB SHIFT Adjust Data	Hc/Hf/Vc
Blanking Adjust Data	Top/Bottom/Left/Right TopPhase/TopKey/TopPin Bottom Phase/BottomKey/BottomPin
W/B Custom Adjust Data	By Screen Select Gain R/G/B Bias Coarse/Fine R/G/B γ R/G/B

Table 4. Video Memory

- Reading and Writing of Video Memory Data
  Data writing and reading of the video memory (Load/Save) differ according to the selected setting values of Video Memory.
  These set and selected values are saved in INPUT-MEMORY.

① Reading (Load)

Timing	Memory Type	Memory Area (from)
When the POWER is turned ON (As soon as the input signal is confirmed)	Video Memory	Reads data from the input memory of the user area to the area changing various data (RAM), and sets the changes in the unit.
When the input signal is input (As soon as the input signal is confirmed)		
When the CH is switched (As soon as the input signal is confirmed)		
When the input signal is changed (As soon as the input signal is confirmed)		
When the video memory setting is set to OFF (SIRCS, communication, etc.)		

Table 5. Reading of Data When Video Memory OFF

<When Video Memory = 1-10>

Timing	Memory Type	Memory Area
When AC is ON	All data of Video Memory 1-10	Reads various data from the input memory of the user area to the area changing data (RAM). Reads the video memory of the user area expanded.
When POWER is ON (As soon as the input signal is confirmed)	Selected video memory	Sets the video memory selected from the area changing data (RAM) in the unit.
When the input signal is input (As soon as the input signal is confirmed)		
When the CH is switched (As soon as the input signal is confirmed)		
When the input signal is changed (As soon as the input signal is confirmed)		
When the video memory setting value is changed (SIRCS, communication, etc.)		

Table 6. Reading of Data When Video Memory 1-10

② Writing (Save)

Basically, the unit writes and saves the data in the user memories at all writing timings.

However, the data will not be written if the MEMORY key is not pressed only when set to Video Memory = OFF and when the input memory is new.

<When Video Memory = OFF>

Timing	Memory Type	Memory Area
When the MEMORY key is pressed	All data when Video Memory is OFF.	Saves the data of the area changing various data (RAM) in the new (custom) input memory of the user area and INPUT-MEMORY of the memory read from.

Table 7. Writing of Data When Video Memory = OFF <When Input-Memory is New>

Timing	Memory Type	Memory Area
When the MEMORY Key is pressed	All data when the video memory is off	Saves the data of the area changing various data (RAM) in the custom input memory of the memory read from of the user area and original memory of the new memory.
When the input Ch is changed (As soon as input instability is confirmed)		
When the input signal is changed (When input instability is confirmed)		
When the mode of the unit is changed		
When the power is turned off		

Table 8. Writing of Data When Video Memory = OFF <When Input-Memory Exists>

<When Video Memory = 1-10>

Timing	Memory Type	Memory Area (to)
When the MEMORY key is pressed	All data of video memory 1-10 (Including video memory that is not selected)	Writes (saves) data of the area changing various data (RAM) in Video-Memory 1-10 in the set memory of the User Area.

Table 9. Writing of Data When Video Memory = 1-10 <When Input-Memory is New>

Timing	Memory Type	Memory Area (to)
When the MEMORY key is pressed	All data of Video Memory 1-10 (Including video memory that is not selected)	Writes (Saves) data of the area changing various data (RAM) in Video-Memory 1-10 in the set memory of the user area.
When the input Ch is changed (When input instability is confirmed)		
When the input signal is changed (When input instability is confirmed)		
When the mode of the unit is changed		
When the power is turned off		

Table 10. Writing of Data When Video Memory = 1-10 <When Input-Memory Exists>

Example : When set to VIDEO MEMORY OFF for an input (Input Memory No. 14)

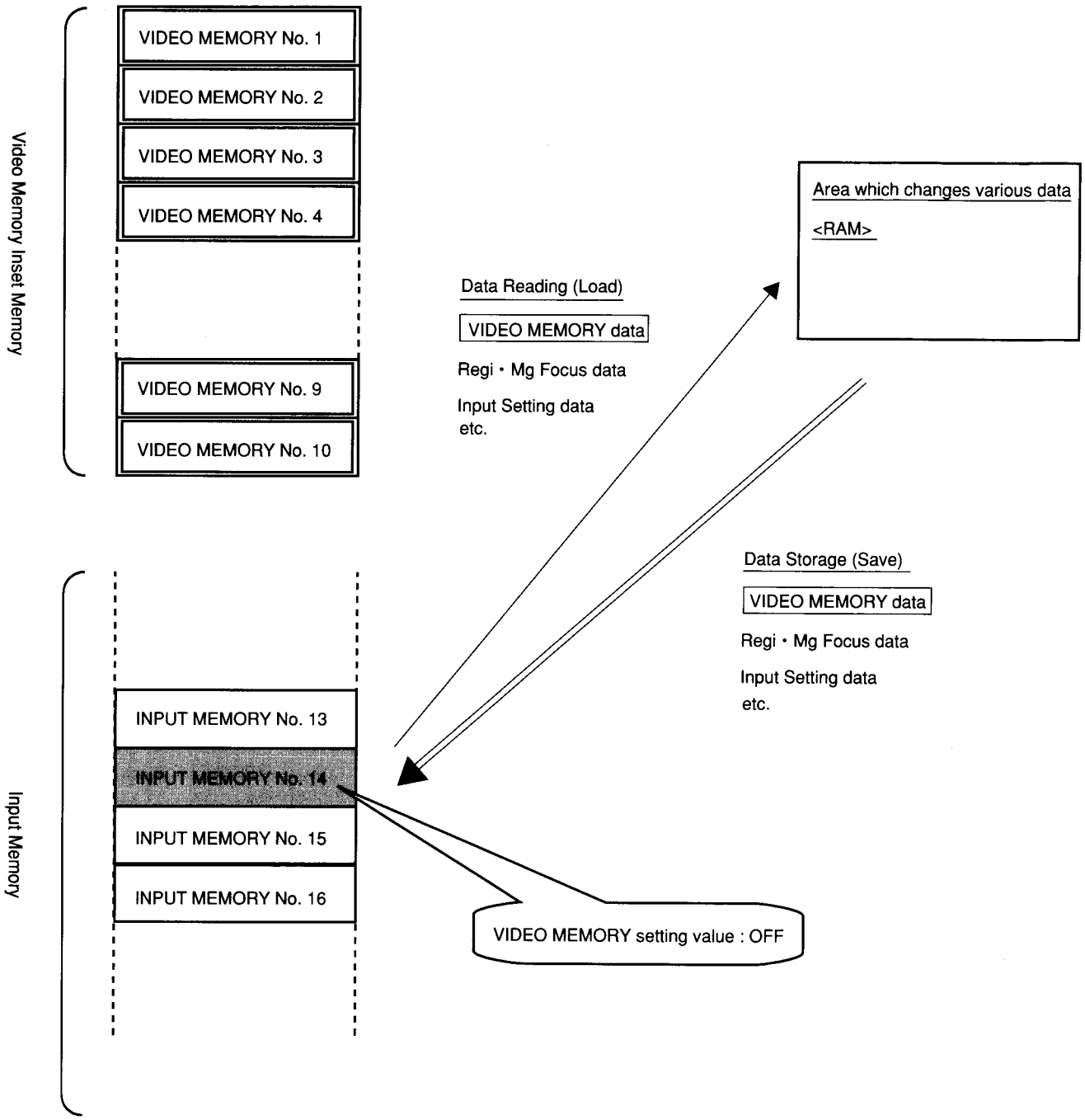

Example : When set to VIDEO MEMORY 3 for an input (Input Memory No. 14)

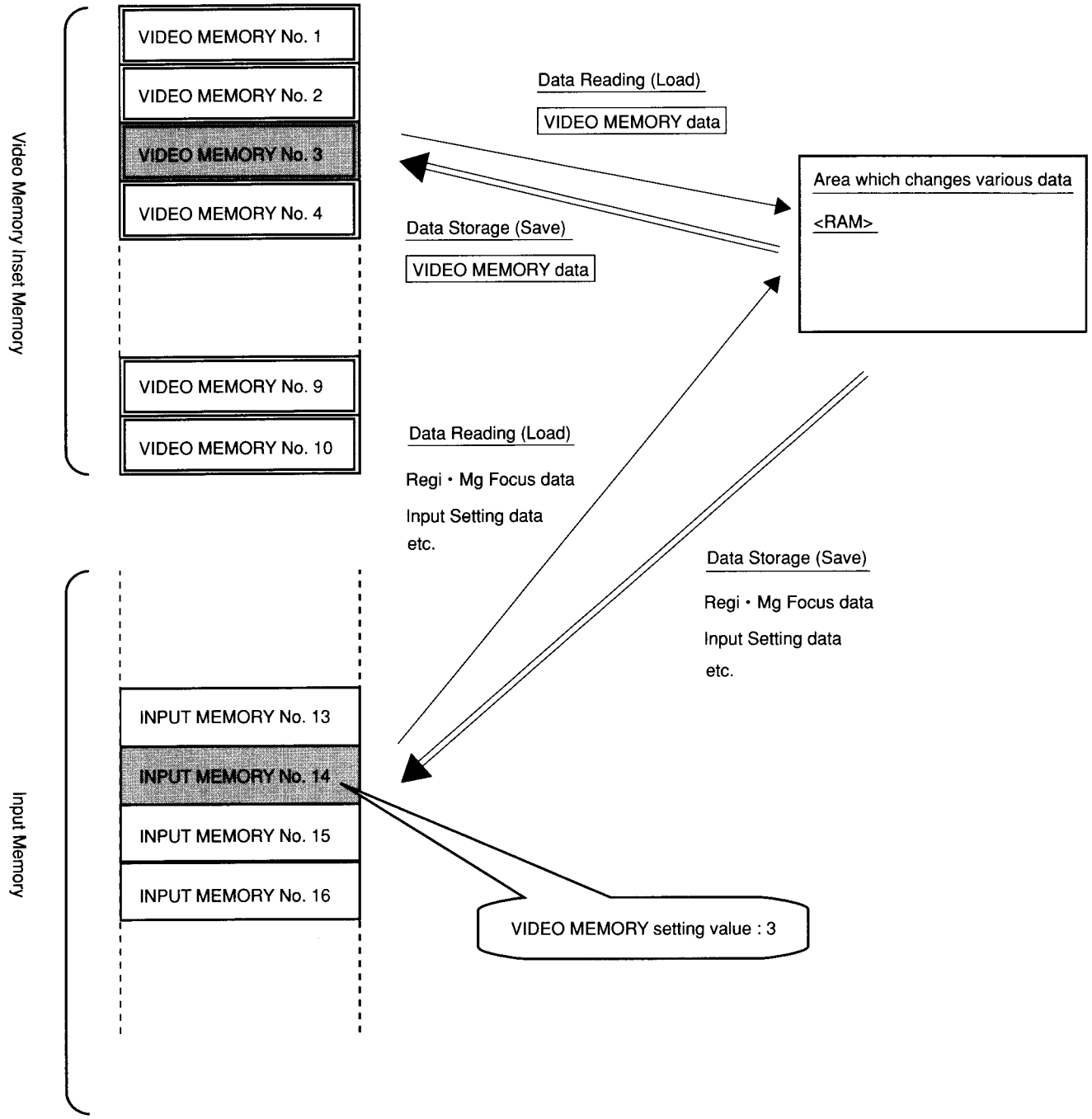

- Color Temperature Memory

  The Screen B and Screen M of Screen Sel are set with color temperatures 9300 k, 6500 k, 5400 k, and 3200 k.
  The data of each color temperature consists of GAIN/BIAS/γ data.

  The color temperature setting value custom is the GAIN/BIAS/γ data in the following memories;
  ○ Input-memory when Video Memory = OFF
  ○ Various video memories when Video Memory = 1-10

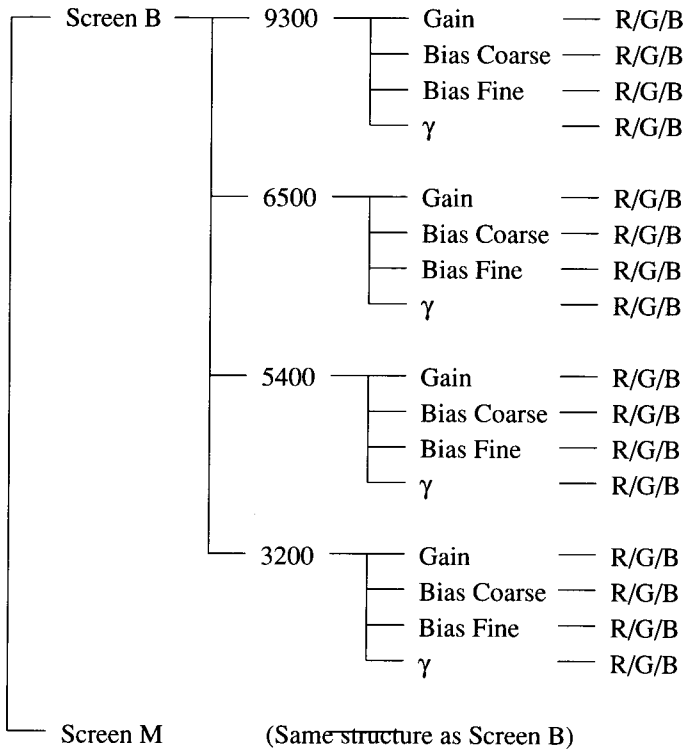

The reading and writing of the data of this memory are as shown in "Table 2 Reading of Set Memory (Other than Video Memory) (Load)" and "Table 3 Writing of Set Memory (Other than Video Memory) (Save)."

Example : When set to Color Temperature: 6500K for an input (Input Memory No. 14)

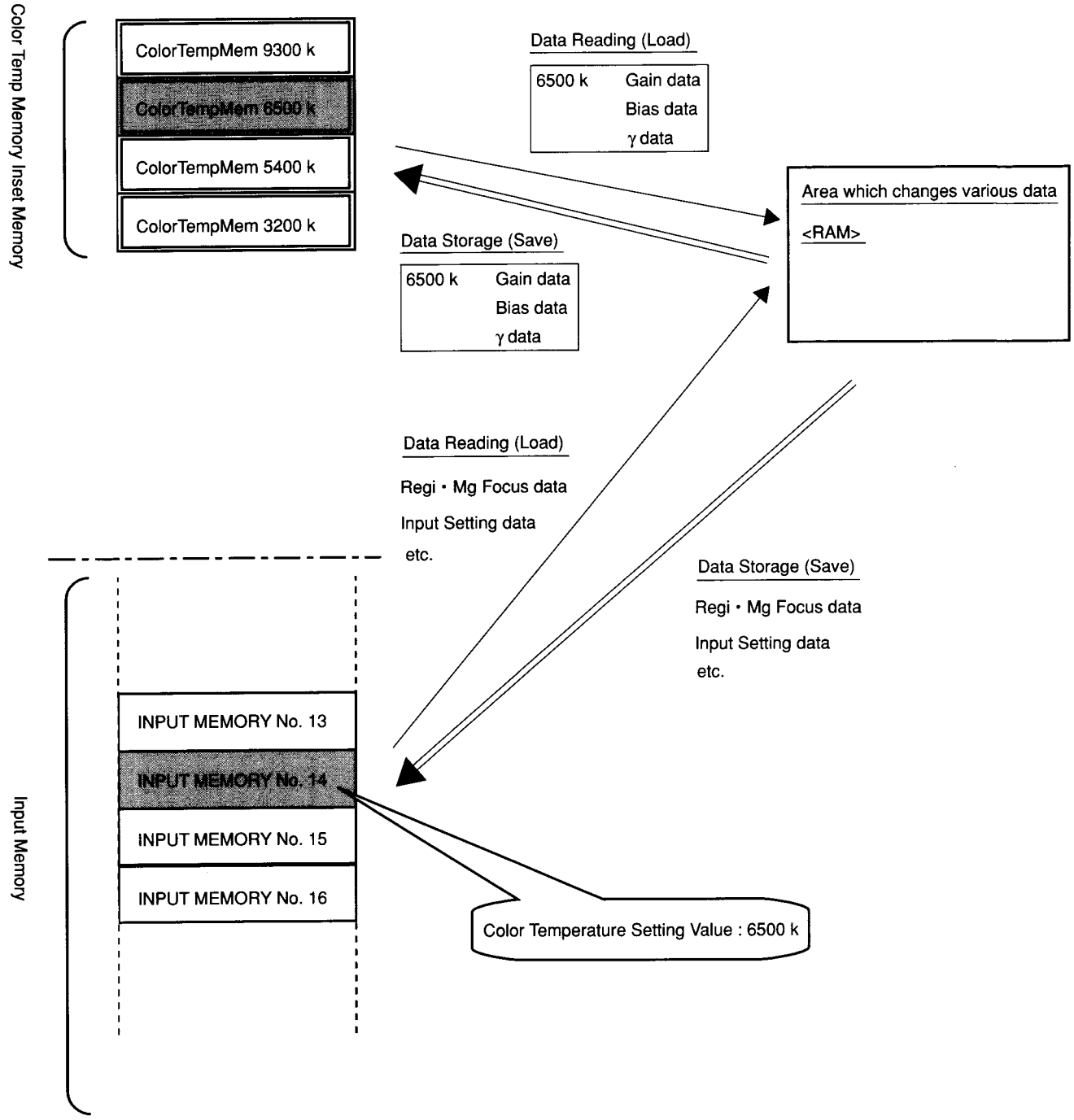

Example : When set to Color Temperature: Custom for an input (Input Memory No. 14)
(When VIDEO MEMORY OFF)

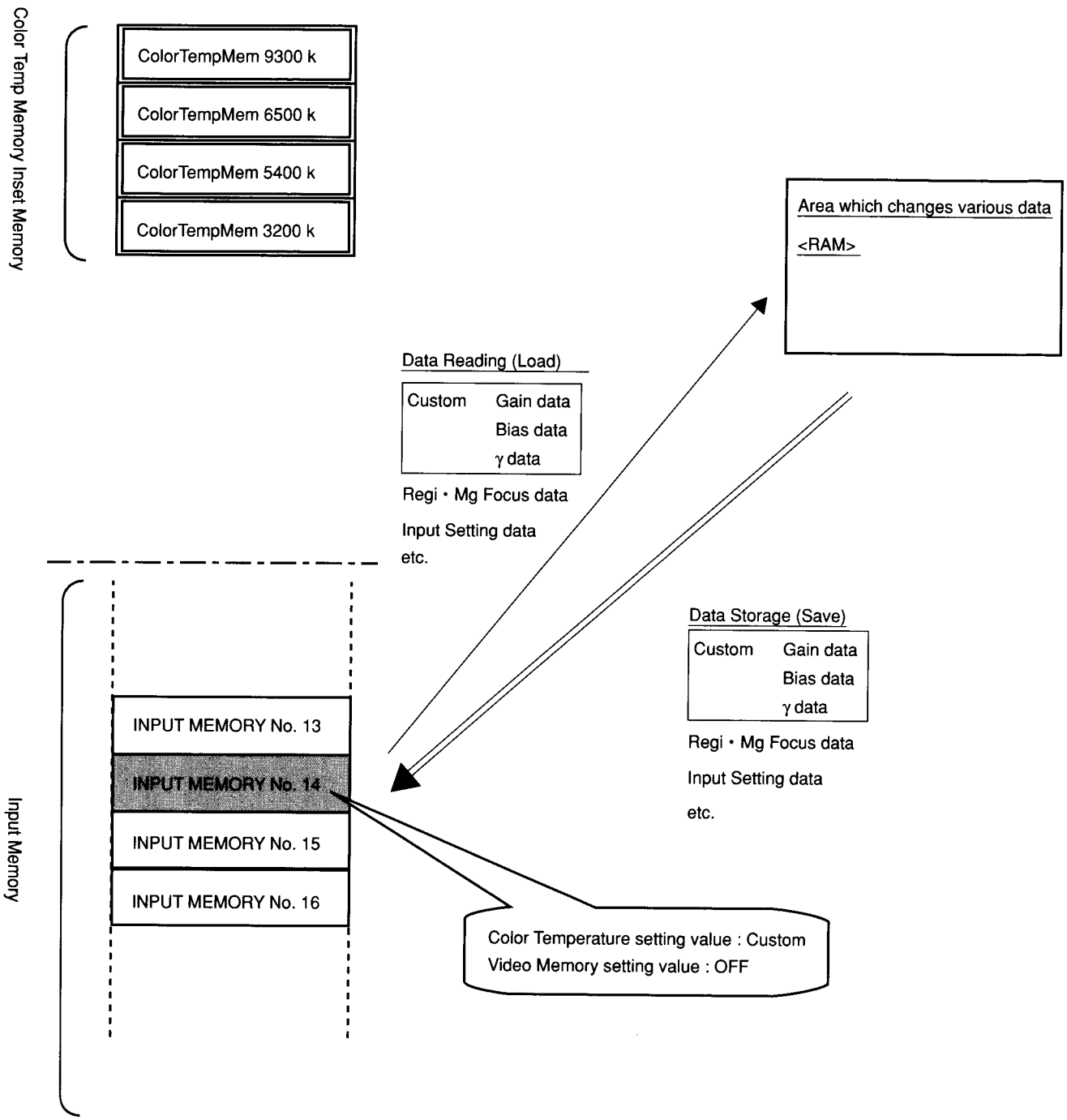

Example : When set to Color Temperature: Custom for an input (Input Memory No. 14)
(When VIDEO MEMORY 3)

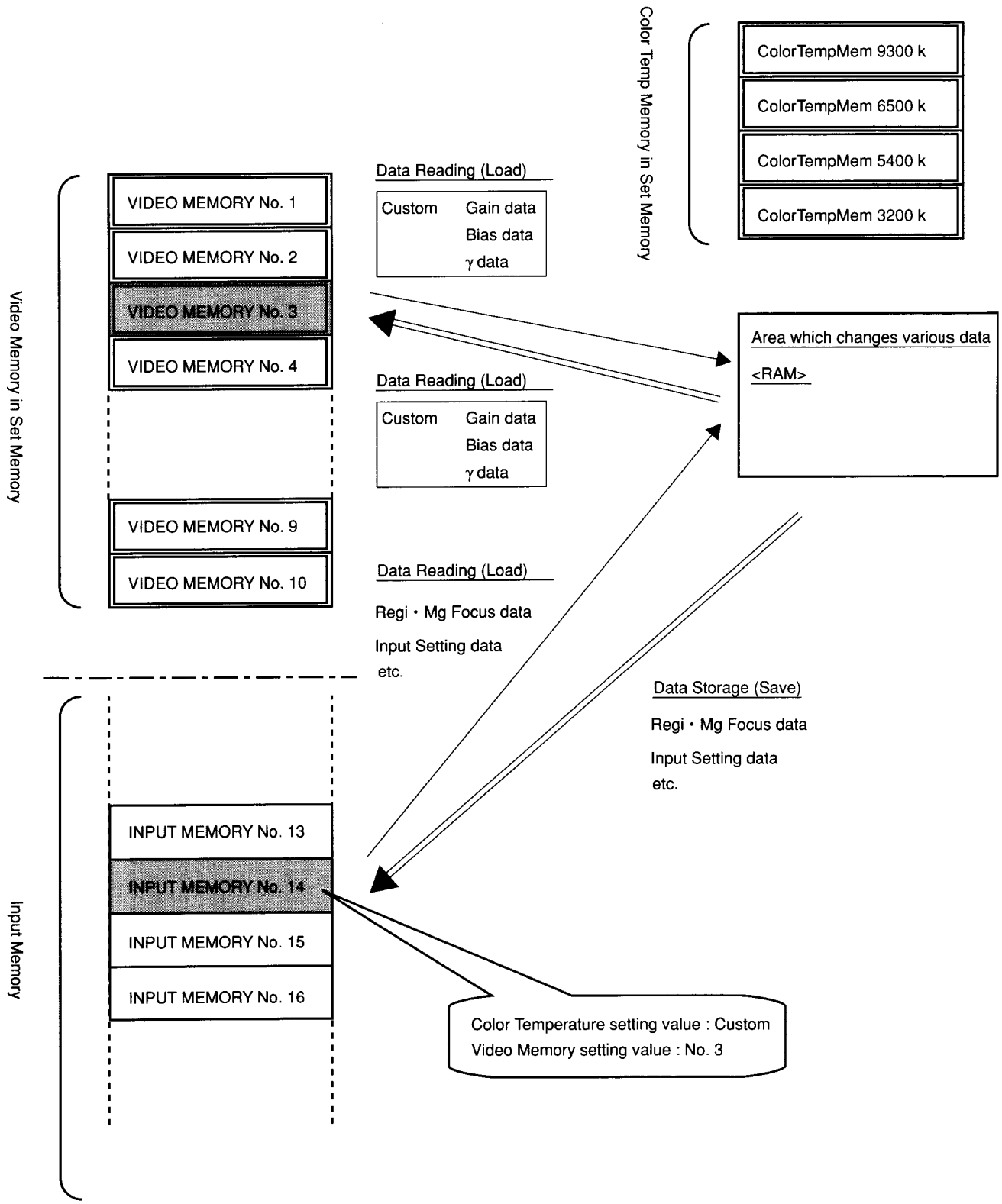

- Uniformity Memory

  Memory which saves the uniformity data.

  The unit has one data for the Uniformity mode : OFF and Manual mode each, and data for every screen for the Standard mode.

  The setting values of the Uniformity mode are in Setting Memory.

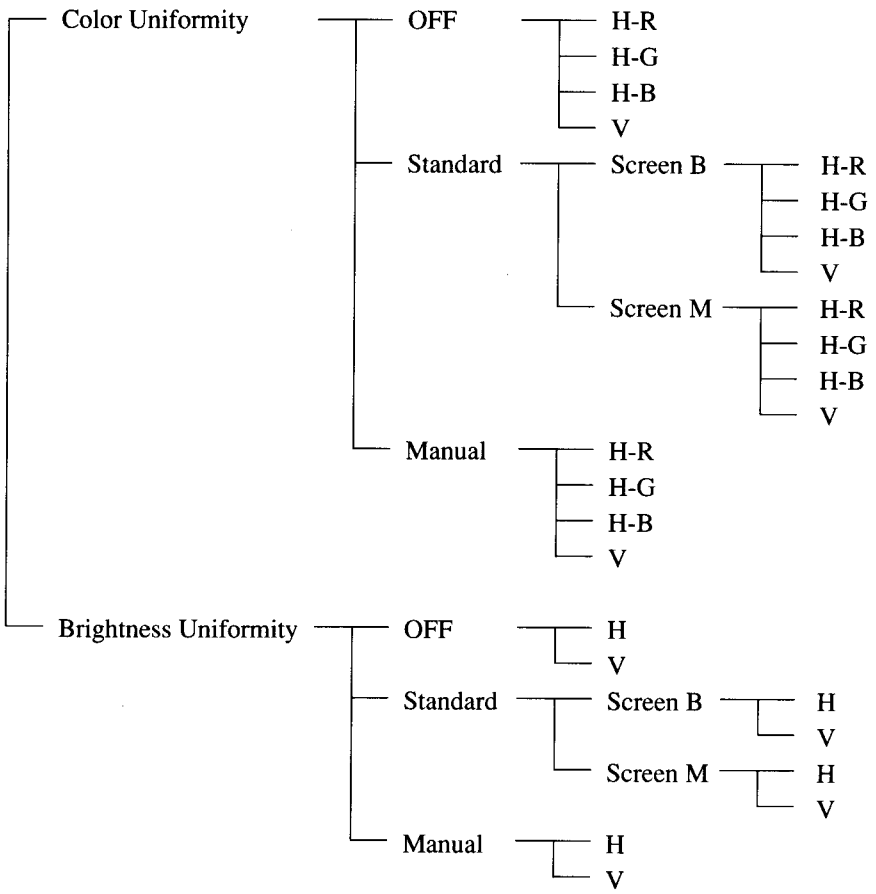

The reading and writing of the data of this memory are as shown in "Table 2 Reading of Set Memory (Other than Video Memory) (Load)" and "Table 3 Writing of Set Memory (Other than Video Memory) (Save)."

- ABL Memory
  Stores various data for ABL control.

  Single tube ABL point ——— By original memory
  (Fixed value) (13 types)
  ABL LINK ┬─ Sub-Contrast
  └─ ABL-Level
  SIZE ABL

  The reading and writing of the data of this memory are as shown in "Table 2 Reading of Set Memory (Other than Video Memory) (Load)" and "Table 3 Writing of Set Memory (Other than Video Memory) (Save)."

- Device Memory

Items	Contents
PIC.CTRL.DEVICE IC DIRECT CTRL	Various register settings of CXA2101
VPS Limit control	VPS limit data of 3 colors-R, G, B : Adjustments of unit

Table 11. Device Memory

The reading and writing of the data of this memory are as shown in "Table 2 Reading of Set Memory (Other than Video Memory) (Load)" and "Table 3 Writing of Set Memory (Other than Video Memory) (Save)."

2. Ch Memory

Broadly, part of the set memory, but memorizes the values set for every channel collectively.
Contains the channel data on the channels and switchers of the unit.

Items	Contents
VIDEO Input-System	Video (Composite) / S-Video (YC)
INPUT-A Input-System	Video/S-Video/RGB/Component/HDTV-YPBPR/HDTV-GBR
INPUT-B Input-System	Video/S-Video/RGB/Component/HDTV-YPBPR/HDTV-GBR
INPUT-C Input-System	Video/S-Video/RGB/Component/HDTV-YPBPR/HDTV-GBR
Switcher Input-System	Video/S-Video/RGB/Component/HDTV-YPBPR/HDTV-GBR
VIDEO DRC setting	OFF /ON
INPUT-A DRC setting	
INPUT-B DRC setting	
INPUT-C DRC setting	
Switcher DRC setting	
Various information by switcher channel	

Table 12. Ch Memory

[Writing and Reading of Ch Memory]

Timing	Memory Type	Memory Area (from)
When AC is ON	All ch memories (Other than video memory)	Reads the data from the ch memory of the user area to the area changing various data (RAM), and sets the data in the unit.

Table 13. Reading of Ch Memory (Load)

Timing	Memory Type	Memory Area
When the MEMORY key is pressed	All ch memories	Writes data in the area changing various data (RAM) to the ch memory of the user area (Save).
When the input ch changes (When input instability is confirmed)		
When the input signal changes (When input instability is confirmed)		
When the mode of the unit changes		
When the power is turned off		

Table 14. Writing of Ch Memory (Save)

3. INPUT Memory

Memory for storing setting values and adjustment values by input signal.
There are altogether 150 standard input memories.

INPUT Memory
- Original Memory (No. 0 to 12)
- Custom Memory (No. 13 to 149)

As shown above, the input memory is divided into original memory and custom memory.
The structure of each memory is basically the same.

- Structure of INPUT Memory
  Consists of the identification data for identifying the input signal and setting and adjustment data by input signal.

INPUT Memory
- Identification data
- Various setting and adjustment data

Items	Contents
CH information <Custom Only>	Input channel selected when the input memory is registered (newly created) : Video/S-Video/INPUT-A/INPUT-B/INPUT-C/Switcher1-1 to 8-8/Other
Input signal type information <Original & Custom>	Signal type information of input signal when the input memory is registered (newly created) : Video, S-Video, Component, RGB, 15 k RGB, HDTV-YPBPR, HDTV-GBR, SDI-4:2:2, DRC, IDTV (Component60), IDTV (notComponent60), INT IDTV
Sync Status information <Custom Only>	Sync status information of input signal when the input memory is registered (newly created) : H/C-Pos/Neg/–, V-Pos/Neg/–, SonG/Neg/–
Input frequency information <Original & Custom>	fH, fV, number of scanning line

Table 15. Input Memory Identification Information Data

Items	Contents	
Video Memory No.	Video Memory setting value set for input signal: OFF, 1 to 10	
Various data when Video Memory is OFF	Video Memory Label	
	Color Temprature Select	
	W/B Adjust Data of Custom	
	Dynamic PICTURE	
	V.SHIFT Select	
	NTSC Setup Select	
	COMPONENT FORMAT Select	
	COMB Filter Select	
	DRC Level Select	
	Picture Control Adjust Data	
	RGB SIZE Adjust Data	
	RGB SHIFT Adjust Data	
	Blanking Adjust Data	
Clamp Select	Clamp pulse selected setting value : Auto, SonG, H/C, HP, Tri-Level Sync	
VIDEO LOCK Select	VIDEO LOCK selected setting value : Nomal, Wide	
SYNC Select	SYNC selected setting value : Auto, SonG/INT, C/EXT C, HV/EXT HV	
SYNC ROUTE	Sync route selection value of RGB signal input to INPUT-A : Auto, Normal, SYNC w VIDEO	
Normal DEFOCUS Select	Defocus mode selected setting value for normal : ON, OFF	
Registration Adjust	CENT	R/G/B, Hc/Hf/Vc/Vf, User/Service (fine), by deflection polarity
	SIZE	R/G/B, Hc/Hf/Vc/Vf/H/V
	LIN	R/G/B, Hc/Hf/Vc/Vf,
	SKEW	R/G/B, Hc/Hf/Vc/Vf
	BOW	R/G/B, Hc/Hf/Vc/Vf
	KEY	R/G/B, H/V/Top/Bottom/Left/Right,
	PIN	R/G/B, H/V/Top/Bottom/Left/Right,
	ZONE	R/G/B, Hc/Hf/Vc/Vf/H/V, Position1-25
Focus Adjust	Mg	R/G/B, All (Position1-9), H-Phase,
	Pole	R/G/B, 2H/2V/4AQP/4DQP/6AHP/6DHP
	AQP	R/G/B, Position1-9
	DQP	R/G/B, Position1-9
	AHP	R/G/B, Position1-9
	DHP	R/G/B, Position1-9
W/B Adjust <Custom>	GAIN	Screen B/M/, R/G/B,
	BIAS	Screen B/M, R/G/B, Coarse/Fine
	γ	Screen B/M, R/G/B

Table 16. Input Memory-Various Setting and Adjustment Data

• Original Memory

Input memory which stores preset and preadjusted data at shipment.

Serves as the memory read from for new input signals of the unit and in internal oscillation modes such as No-INPUT and INT.OSC mode : ON.

<Difference with Custom Memory>

① Identification conditions in identification data of input memory consist of only;

* Input signal type
* Input frequency (For RGB inputs)

The original memory closest to the input signal based on these conditions is therefore selected and the data is loaded.

② In all cases, various data is also saved in the original memory.

③ In all cases, the memory frame is not erased.

[Does not apply to automatic erasure when the input memory becomes full with registrations.]

[Does not apply to erasure of "Delete function" of the input memory editing function.]

No.	fH (kHz)	fV (Hz)	Scanning Lines	Input Signal Type
00	15.73	60.00	262	VIDEO line (NTSC3.58)
01	15.73	60.00	262	RGB
02	24.83	56.40	440	RGB
03	31.47	59.94	525	RGB
04	48.36	60.00	806	RGB
05	63.98	60.02	1066	RGB
06	75.00	60.00	1250	RGB
07	93.75	75.00	1250	RGB
08	106.25	85.00	1250	RGB
09	126.84	60.00	2114	RGB
10	145.00	60.00	2417	RGB
11	31.47	60.00	525	Double speed line DRC (NTSC 3.58)
12	33.75	60.00	562	HDTV line (YPBPR)

Table 17. Original INPUT MEMORY

• Custom Memory

Input memory for the input signal after shipment.

When the number of input memory registrations become 150 (including the 13 original memories), the memory of the custom memory area is replaced from the smallest number.

[Writing and Reading of Input Memory]
The reading and writing (load/save) of data differs between new input signals and existing input signals.

① Data reading (load)

<For new input signals>

When determined as "new input signal" as a result of the differentiation of the input signal, the most appropriate memory (memory with the signal most resembling the input signal <input signal type, and fH>) is determined from the original input memories, and it is read (loaded) in the area for changing various data (RAM).

<For existing input signals>

If a signal with the same identification conditions exist in the custom input memory as a result of differentiation of input signals, it is determined that the input memory for that signal has been already created, that is, it is an existing input signal, and the data of the custom input memory is read (loaded) to the area changing various data (RAM).

Timing
When the POWER is turned ON (As soon as the input signal is confirmed)
When the input signal is input (As soon as the input signal is confirmed)
When the CH is switched (As soon as the input signal is confirmed)
When the input signal is changed (As soon as the input signal is confirmed)
When Video Memory is set to OFF (SIRCS, communication, etc.)

Table 18. Reading of Input Memory (Loading)

<When NO-INPUT>

When determined as NO-INPUT as a result of the differentiation of the input signal, data from the original input memory set in that channel or determined from the input signal type in the board information is read to the area changing various data (RAM) and set in the unit.

Memory loaded from for every input signal type immediately before NO-INPUT

- O VIDEO/S-VIDEO/COMPONENT/SDI : Original INPUT Memory No. 0
- O RGB (Including 15 kRGB) : Same No. as the oscillation frequency of fH set at INT.OSC pattern of original input memories No. 1 to 10.
- O HDTV system (YPBPR, GBR) : Original INPUT Memory No. 12
- O Signal set to DRC ON : Original INPUT Memory NO. 11

② Data Writing and Storage (Save)

The writing and storing timing of the data and memory in which the data is written in differ between the new input signal and existing input signal.

<For new input signals>

By pressing the MEMORY Key, the INPUT-MEMORY data "in the area (RAM) changing various data" at that point is written and stored (save) in the new memory set as the custom input memory.

At the same time, the same data is also written and stored in the original input memory from which the data is read from (load).

Timing	Memory Type	Memory Area (to)
When the MEMORY key is pressed	All data in the input memory	New custom input memory of the user area and input memory from which the data is loaded from (original).

Table 19. Writing and Storing of Data in Input Memory <New> (Save)

<For existing input signals>

At all timings for writing and storing data in the unit (save), data of the input memory for the input signals in the area for changing various data (RAM) is collectively written and stored in the custom input memory from which the data is read from (load) of the user area.

Timing	Memory Type	Memory Area (to)
When the MEMORY key is pressed	All data of the input memory	Custom input memory read from of the user area (load) and original input memory read (loaded) when this memory is newly created.
When the input channel is changed (When input instability is confirmed)		
When the input signal is changed (When input instability is confirmed)		
When the mode of the unit is changed		
When the POWER is turned OFF		

Table 20. Writing and Storing of Data in Input Memory <Exist> (Save)

<When NO-INPUT>
At all timings for writing and storing data in the unit (save), data of the input memory for the input signals in the area for changing various data (RAM) is collectively written and stored in the original input memory from which the data is read from (load) of the user area.

<INPUT-Memory No. in which the data is written and stored :>
When the input memory load/save is Auto :
Until the number of registrations of the custom input memory becomes max. (150 — 13), assigned automatically to unused memories starting from the smallest memory number in order.
When the number of registrations of the custom input memory is max, new input memories are created by overwriting from No. 13.

Data cannot be written when the input memory written in is protected ;
In this case, take note that adjustments will be possible.
At the same time, when the memory key is pressed, an OSD message indicating that data cannot be written will be displayed.
If all input memories are protected, since there is no memory to save the data, an error message will be displayed when determined as new data.
When the protect of several input memories is canceled, the data to be newly registered will be written in the memory with the smallest number.

When input memory load and save is manual :
The memory of the input memory No. specified will be the input memory for the new input signal.

Data cannot be saved when the input memory saved in is protected ;
In this case, take note that adjustments will be possible.
At the same time, when the memory key is pressed, an OSD message indicating that data cannot be saved will be displayed.
If all input memories are protected, since there is no memory to save the data, an error message will be displayed when determined as new data.

Example : When the input signal is new to the unit (fH = 31.5 kHz)
State in which data is already registered to input memory No. 13

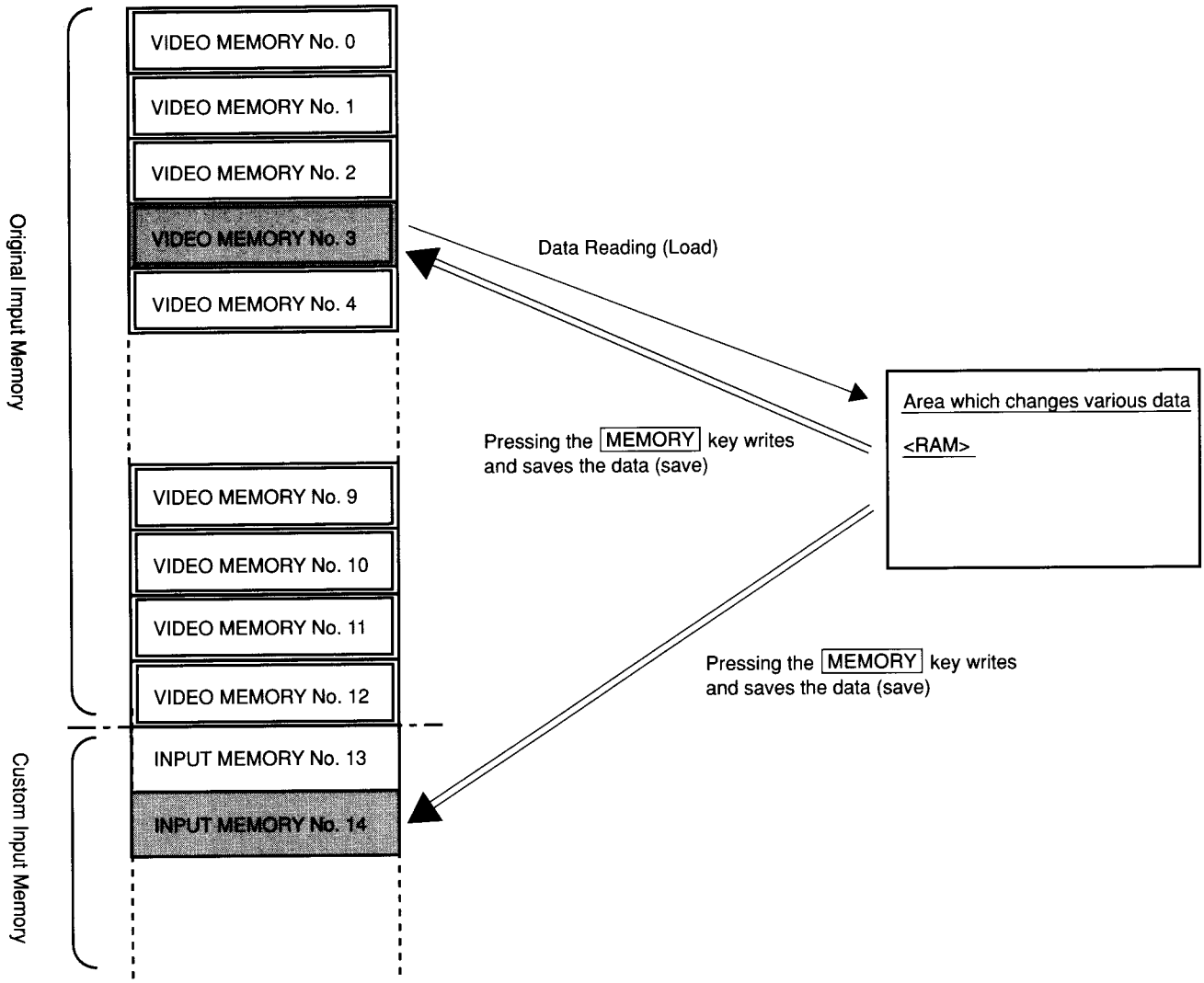

Example : When the input signal was previously input to a different channel (fH = 31.5 kHz: No. 13) to the unit
State in which data is already registered to input memory No. 13

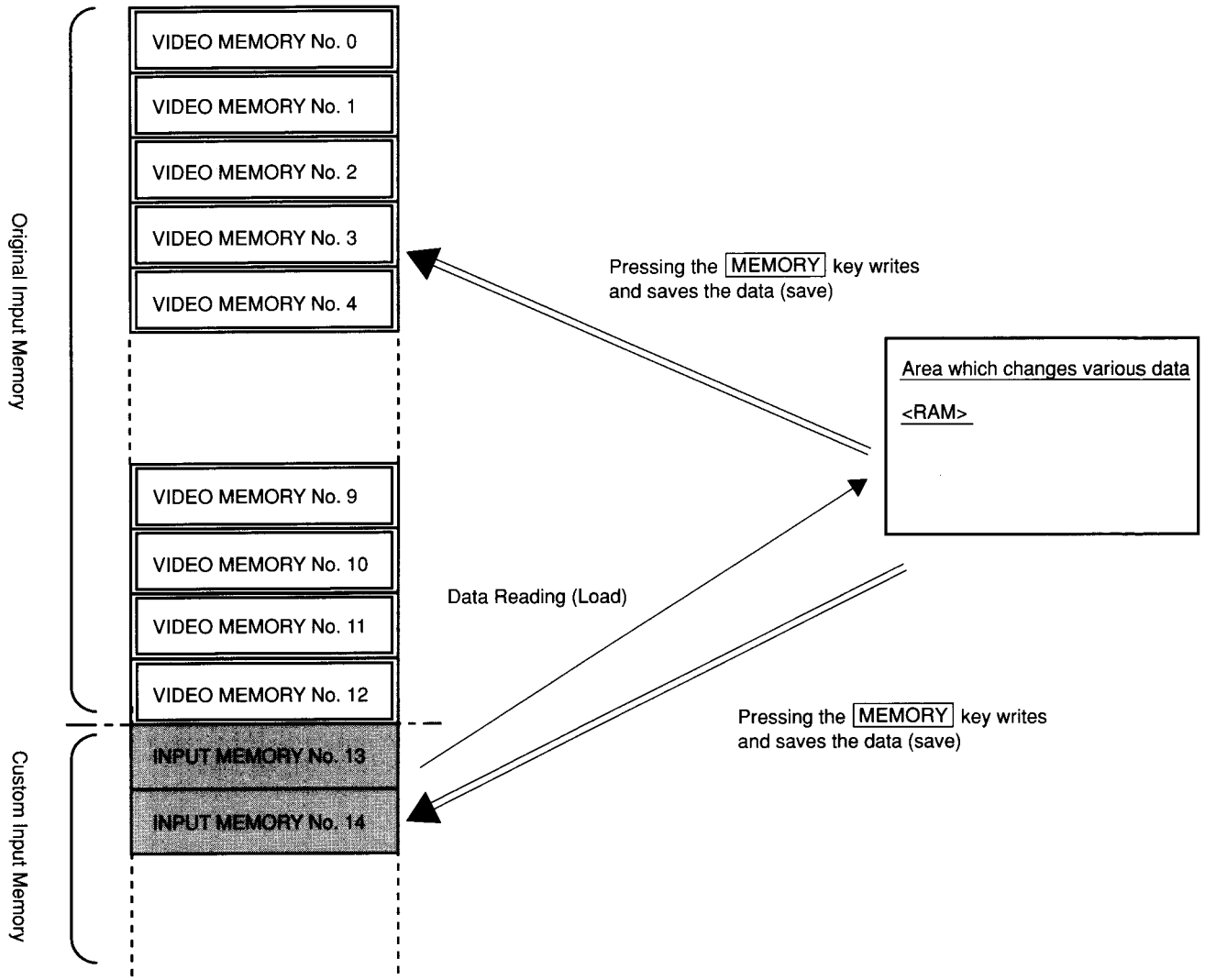

Example : When the input signal has already been input to the unit (fH = 31.5 kHz: No. 13)
State in which data is already registered to input memory No. 14

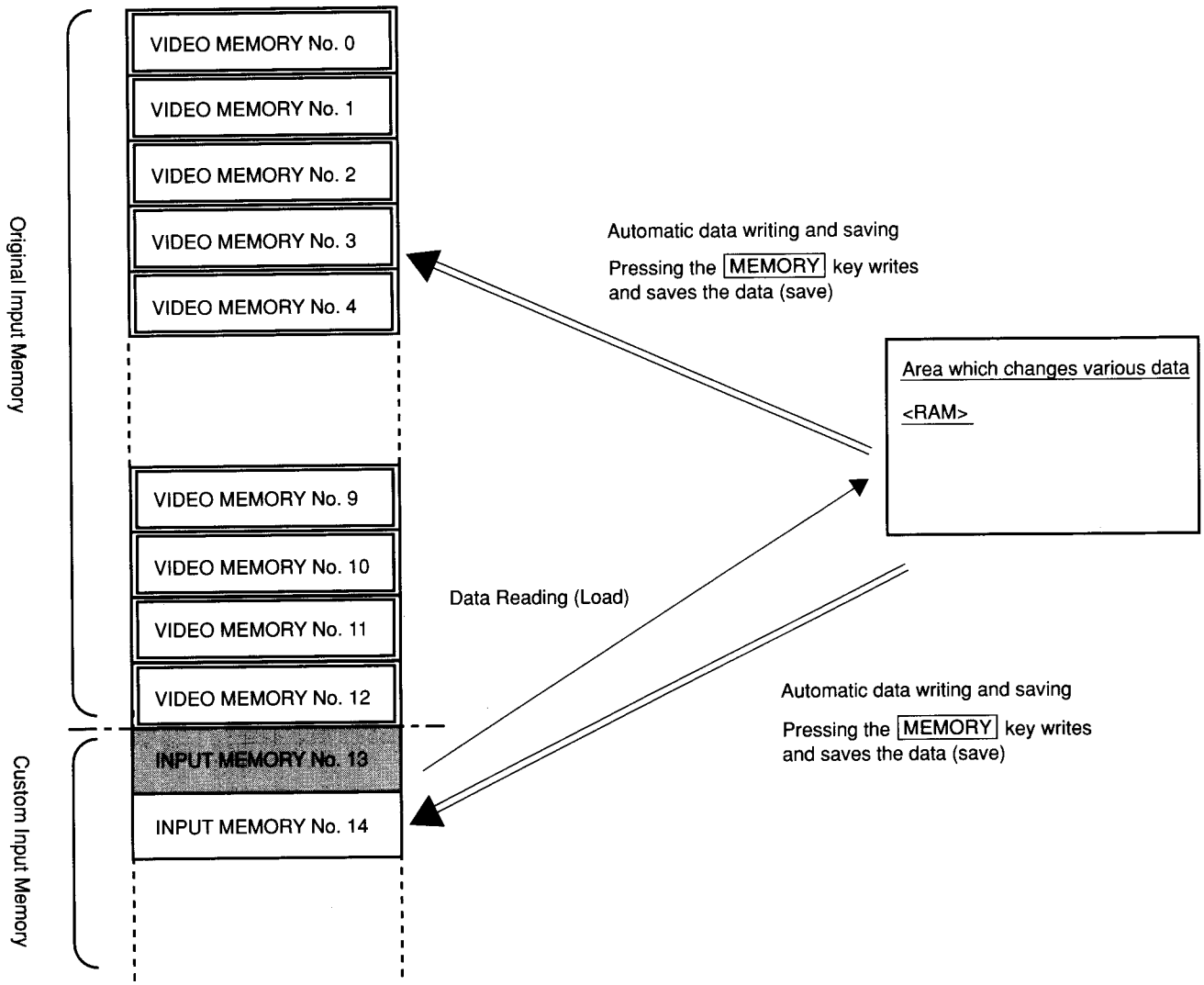

2-5. MEMORY DATA RESET

Refer to page 139 of the installation manual.

SECTION 3
SET-UP ADJUSTMENTS

3-1. PRECAUTIONS UPON ADJUSTMENT

1. When the CRT (a cathode-ray tube) has been replaced, fix the DY (deflection yoke) to the funnel and decide the position of the neck assembly before beginning adjustments.
2. When the power is turn off, the service mode is canceled.

3-2. ATTACHING THE NECK ASSEMBLY

1. Fix DY to the CRT funnel, then fix the Magnet Focus Coil.
2. Tentatively secure the 2-pole and 4-pole magnet assembly in contact with the Magnet Focus Coil.
3. Attach the CB board.

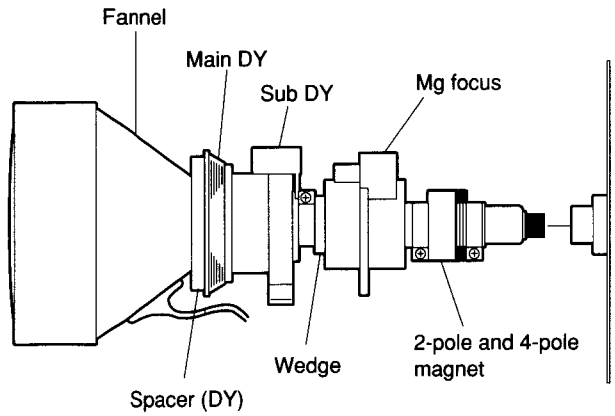

3-3. ADJUSTING CONDITIONS

3-3-1. Projecting System

Place the unit on a table which satisfies the projection conditions as shown in the figure.

Basic Optical System

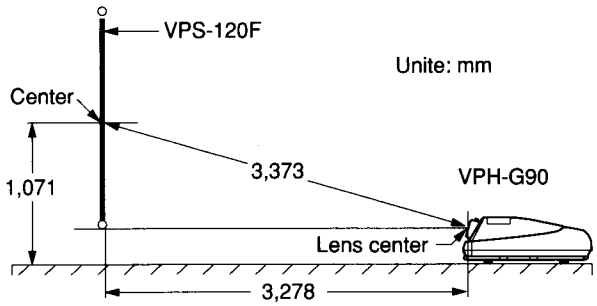

Inclination Angle at Top and Bottom

(Side view)

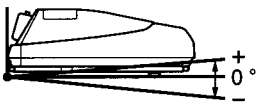

Specifictions:
Within $0^{+0.2°}_{-0.5°}$

Left and Right Tilt of the Unit

(Top view)

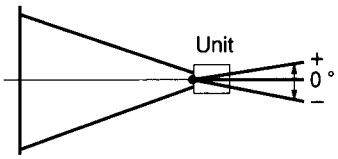

Within 0 ±0.5 °

3-3-2. CRT Convergence Angle Check

Open the top cover and check that there are adjusting screws in the adjusting holes for 120-inch screen. If there are no adjusting screws in the 120-inch adjusting holes, adjust as follows.

1. Turn on the power of the projector.
2. Set the remote commander to the serviceman adjustment mode. For details, see "Remote Commander" in the instruction manual.
3. Reset the red, green and blue registration data. For details, see "Resetting the Data" in the instruction manual.
4. Observe the screen and confirm the following.
   - The center of the green hatch pattern aligns with the horizontal center of the screen.
   - The centers of the red and blue hatch patterns align at even intervals from the green hatch pattern.

   If the center of the green hatch pattern does not align with the screen center, the projector may not be installed correctly. Re-install it rightly.

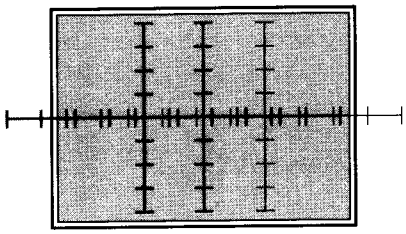

5. Loosen the CRT fixing screws (two black screws) used for the red with the use of the supplied tool. Make sure not to remove the screws.

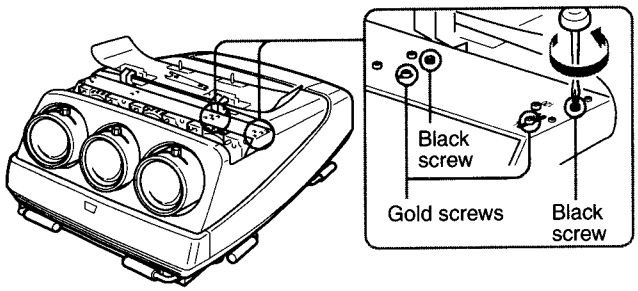

6. Insert the adjusting screws (two gold screws) in the adjusting holes for the 120-inch screen.

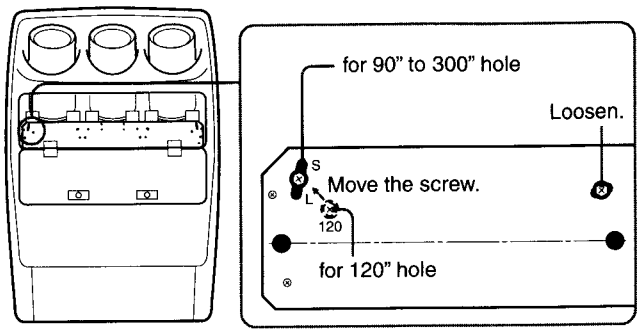

When the unit is shipped from a factory, the adjusting screws are screwed into the adjusting holes for 120-inch screen.

7. Tighten the CRT fixing screws (two black screws) used for the red, which were loosened at Step 5.
8. Repeat Steps 5 to 7 to loosen the CRT fixing screws (two black screws) used for the blue, adjust the CRT convergence angle for the blue, then tighten the CRT adjustment screws (two gold screws) used for the blue.

3-4. FOCUS ADJUSTMENT

3-4-1. Preparations

1. Turn ON the MAIN POWER SW, and press the POWER ON key to turn on the power.
2. Press the NORMAL key.
3. Continue pressing the keys as follows.
   ENTER key ⇨ ENTER key ⇨ ↑ key ⇨ ↓ key ⇨ ENTER key ⇨
4. Select "YES" on the screen with ↑ and ↓ keys, then press the ENTER key.
5. Press the MENU key. "S" is displayed on the screen and the serviceman adjusting mode is set.
6. Keep pressing the RESET key for five seconds.
7. Select "YES" on the screen with ↑ and ↓ keys, then press the ENTER key.
8. Select "ALL MEMORY" on the screen with ↑ and ↓ keys, then press the ENTER key.
9. Select "FACTORY DATA" on the screen with ↑ and ↓ keys, then press the ENTER key.
   With the above procedure, the same state as that at the time of factory shipment can be set for the unit, and adjustment can be made for the replaced color.
10. Set INPUT-A to the no-signal state, then select INPUT-A.
11. Select the INT OSC PATTERN from INT. OSC menu with the MENU key, then select P5 (fH = 64 kHz, fV = 60 Hz).

3-4-2. Focus Rough Adjustment

1. Set INPUT-A to the no-signal state, then select INPUT-A.
2. Select the ME pattern, as test pattern, with the PATTERN key.
3. Cut off the colors other than the one to be adjusted with the CUT OFF key and set a single color. Then adjust the lens focus roughly.
4. Press the MG FOCUS key to set the MG FOCUS adjustment mode, then select the ME pattern with the PATTERN key.
5. Press the ALL key to adjust the center focus of R, G and B roughly.
6. Repeat Steps 3 to 5 until the best center focus is attained.

3-4-3. DY Angle Adjustment

Note: Angle adjustment should be made only with DY for the color for which CRT was replaced.

GREEN DY Angle Adjustment

1. Set INPUT-A to the no-signal state, then select INPUT-A.
2. Press the REGISTRATION CENT key and ADJ G key to make the cross-hair pattern appear.
3. Press the CUT OFF key and B key to set green only on the screen.
4. Roughly adjust GREEN DY angle so that the horizontal cross-hair pattern can be parallel to the horizontal line of the screen.
5. Roughly adjust the coil so that the marking section of the GREEN MG FOCUS coil can face up.

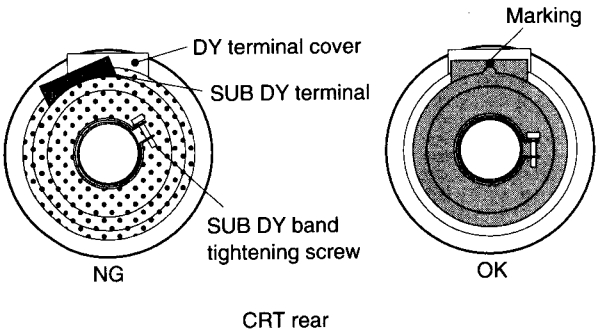

6. Adjust the GREEN CENT to the screen center using ↑, ↓, ← and → keys.
7. Roughly adjust the GREEN H.SIZE, H.LIN and V.BOW so that the horizontal line at the center can be straight. In H.SIZE/LIN adjustments, the screen edge or the 30 to 50 mm marks inside the screen serve as the reference.
   In order to adjust the DY tilt easily, adjustment is made so that the external lines of the cross-hatch come slightly outside these marks in the H. SIZE adjustment.
8. Press REGISTRATION SKEW on the remote commander to set to the skew adjustment model. Make sure that the "V.SKEW" data on the screen shows "128." Adjust to "128" if it is not so.
9. Adjust GREEN DY angle so that the cross-hair horizontal line can be parallel to the horizontal line of the screen, then tighten the fixing screws.
   Note:
   - **Use a non-magnetized screwdriver to tighten the screws.**
   - **Fix the DY to the CRT funnel.**
   - **Tighten the DY band with the following torque.**
     Tightening Torque:
     80 to 120 N•cm (8.16 to 12.24 kgf•cm).
10. After fixing DY, check that the values of V.SKEW is within the following specification.
    Specification: Green: V.SKEW data = 128 ±5

RED DY Angle Adjustment

11. Adjust RED DY tilt in the same way as the one for GREEN DY (see Steps 1 to 10).
    - Press the CUT OFF B key to set the screen to RED and GREEN.
    - Use the horizontal lines of GREEN cross-hair pattern as reference of adjustment.

BLUE DY Angle Adjustment

12. Adjust BLUE DY tilt in the same way as the one for GREEN DY (see Steps 1 to 10).
    - Press the CUT OFF R or G key.
    - Use the horizontal lines of GREEN or RED cross-hair pattern as reference of adjustment.

3-4-4. MG FOCUS Coil Angle Adjustment

BLUE MG FOCUS COIL Angle Adjustment

1. Set INPUT-A to the no-signal state, then select INPUT-A.
2. Select the INT OSC PATTERN from INT. OSC menu with the MENU key, then select P3 (fH = 31.5 kHz, fV = 60 Hz).
3. Press the MG FOCUS key to set to Magnet Focus mode. Press the ADJ B key to set to BLUE adjustment mode, then press the PATTERN key to select the dot (9 × 9) pattern.
4. Press the CUT OFF R and G keys to set BLUE only on the screen.
5. Press the CONTR (+) key to set contrast to the maximum.
6. Press the MG FOCUS key, then press ↑ or ↓ key to select "ALL." Press ← key to set the data of "ALL" to the minimum.
7. Adjust the AQP, DQP, AHP, and DHP so that the dots can be round.
8. Select "ALL" with ↑ or ↓ key, then press ← or → key to set the dots to the minimum.
9. Press the MG FOCUS key to set to DEFOCUS mode. Adjust the COIL angle so that the dot on the screen center can be vertically longer, then fix it.

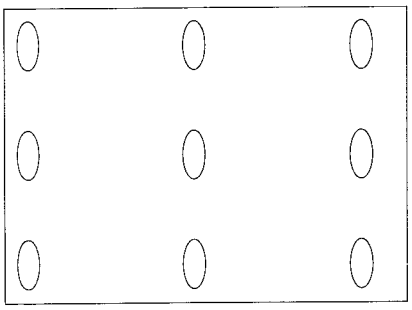

Note:
- **Use a non-magnetized screwdriver to tighten the screws.**
- **Fix the MG FOCUS Coil at the rear of Sub DY.**
- **Tighten the MG FOCUS Coil with the following torque.**
  Tightening Torque: 80 to 120 N•cm (8.16 to 12.24 kgf•cm)

10. Press the PATTERN key to select ME Pattern. Select "ALL" with ↑ or ↓ key, then roughly adjust the focus by pressing ← or → key.
11. Press the COUNT (+) or (−) key to set the CONTRAST display on the screen to "80."
12. Keep pressing MEMORY key for 5 seconds or more.
13. Select "YES" on the screen with ↑ and ↓ keys, then press the ENTER key.
14. Select "FOCUS DATA" on the screen with ↑ and ↓ keys, then press the ENTER key.

R/G/B 2P-4P COIL Angle Adjustment

Adjust the angle of 2P-4P coil so that its marking secion becomes upward.

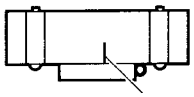

3-4-5. 64 kHz Signal Registration Rough Adjustment

1. Set INPUT-A to the no-signal state, then select INPUT-A.
2. Select the INT OSC PATTERN from INT. OSC menu with the MENU key, then select P3 (fH = 64 kHz, fV = 60 Hz).

GREEN Registration Adjustment

3. Press the REGISTRATION CENT key and ADJ G key.
4. Press CUT OFF R and B keys to set GREEN only on the screen.
5. Adjust the GREEN center to the screen center using the ↑, ↓, ← and → keys.
6. Press REGISTRATION SIZE key.
7. Roughly adjust H. SIZE (the horizontal size) with ← and → keys, then V. SIDE (the vertical size) with ↑ and ↓ keys. Adjust the external circumference of the GREEN test signal to the position 30 to 50 mm inside the screen.
8. Press REGISTRATION KEY key.
9. Roughly adjust H. KEY and V. KEY (the horizontal and vertical keystones) using the ↑, ↓, ← and → keys.
10. Press REGISTRATION BOW key.
11. Roughly adjust H. BOW and V. BOW (the horizontal and vertical bows) using the ↑, ↓, ← and → keys.
12. Press REGISTRATION SKEW key.
13. Roughly adjust H. SKEW and V. SKEW (the horizontal and vertical skews) using the ↑, ↓, ← and → keys.
14. Press REGISTRATION PIN key.
15. Roughly adjust H. PIN and V. PIN (the horizontal and vertical pin cushions) using the ↑, ↓, ← and → keys.

RED Registration Adjustment

16. Press the ADJ R key.
17. Press CUT OFF B keys to set RED and GREEN only on the screen.
18. Adjust RED registration in the same way as Steps 5 to 15. Adjust the RED signal to GREEN signal.

BLUE Registration Adjustment

19. Press the ADJ B key.
20. Press CUT OFF R keys to set BLUE and GREEN only on the screen.
21. Adjust BLUE registration in the same way as Steps 5 to 15. Adjust the BLUE signal to GREEN signal.

Saving Registration Data

22. Keep pressing MEMORY key for 5 seconds or more.
23. Select "YES" on the screen with ↑ and ↓ keys, then press the ENTER key.
24. Select "REGISTRATION DATA" on the screen with ↑ and ↓ keys, then press the ENTER key.
25. Press the NORMAL key to exit from the adjustment mode.
26. Press the PATTERN key to output the cross-hatch on the screen, then check that the RED, GREEN and BLUE registration have been adjusted roughly.

3-4-6. RED/GREEN/BLUE Focus Adjustment

1. Set INPUT-A to the no-signal state, then select INPUT-A.
2. Select the INT OSC PATTERN from INT. OSC menu with the MENU key, then select P3 (fH = 31.5 kHz, fV = 60 Hz).

GREEN Focus Adjustment

3. Press the MG FOCUS key and ADJ G key.
4. Press CUT OFF R and B keys to set GREEN only on the screen.
5. Press CONTR (+) key to set the contrast to the maximum.
6. Press PATTERN key to select "Dot (17 × 17) & Hatch (5 × 5)" pattern.
7. Select "ALL" on the screen with ↑ and ↓ keys, then press the ENTER key.
8. Increase the ALL data (+40) with ← and → keys, then output the flare.
9. Select "2PH (2-Pole H)" on the screen with ↑ and ↓ keys, then adjust the dot core to the center of the flare in the horizontal direction with ← and → keys.
10. Select "2PV (2-Pole V) and adjust the dot core to the center of the flare in the vertical direction.
11. Select "2PH (2-Pole V) and adjust the dot core to the center of the flare in the vertical direction.
12. Return to "ALL," and decrease the ALL data (−80) to increase the dot size.
13. Select "6PA" and perform adjustment to transform the triangle in the vertical direction of the dot to an ellipse.
14. Select "6PD" and perform adjustment to transform the triangle in the skew direction of the dot to an ellipse.
15. Select "4PA" and perform adjustment to transform the ellipse in the vertical and horizontal directions of the dot to be round.
16. Select "4PD" and perform adjustment to transform the ellipse in the skew direction of the dot to be round.
17. Repeat Steps 9 to 16 until the dot becomes round.

RED Focus Adjustment

18. Press the ADJ R key.
19. Press CUT OFF, G and B keys to set RED only on the screen.
20. Adjust RED centering in the same way as GREEN centering.

BLUE Focus Adjustment

21. Press the ADJ B key.
22. Press CUT OFF, R and G keys to set BLUE only on the screen.
23. Adjust BLUE centering in the same way as GREEN centering.
24. Press CONTR (−) key to set the contrast to "80."
25. Repeat Steps 3 to 23 until the dot becomes round.

Saving Focus Data

26. Keep pressing MEMORY key for 5 seconds or more.
27. Select "YES" on the screen with ↑ and ↓ keys, then press the ENTER key.
28. Select "FOCUS DATA" on the screen with ↑ and ↓ keys, then press the ENTER key.
29. Press the NORMAL key to exit from the adjustment mode.

3-4-7. Zenith Angle Adjustment

1. Input the 64 kHz RGB signal to the INPUT-A connector, then select INPUT-A.
2. Press the MG FOCUS key and ADJ G key.
3. Press CUT OFF R and B keys to set GREEN only on the screen.
4. Press PATTERN key several times and select ME pattern.
5. Roughly adjust the "ALL" for "POSITION No. 1." In succession, roughly adjust the AQP, DQP, AHP, and DHP for "POSITION No. 2" to "POSITION No. 5."
6. Set ME pattern on the screen, and roughly adjust the lens corner focus.

   Note: If the center focus is not precisely adjusted, adjust it again. Patterns other than ME pattern are also available.

7. Adjust the lens center focus so that ME pattern at the bottom part of the screen center can be best focused.
8. Look at the top part of the screen center. Rotate the lens center focus to the "Left" and check if a best focus position exists. If so, take the point as "Left."
9. If not, adjust the focus at the bottom part of the screen to the best then look at the top part and rotate the lens focus to the "Right." Check if the best focus point exists. If so, take the point as "Right."
10. Adjust again the focus at the bottom part precisely.
11. Rotate the zenith angle adjustment nut (V) in the same direction as that obtained in Step 8 or Step 9 so that the focus at the top and the bottom can be the same.
    [Zenith Angle Adjustment Specification]
    Adjust the main lens focus precisely so that the bottom part (or the top part) of the center can be best focused. At this time, the best focus point of the top part (or the bottom part) of the center should be within 20 mm from the screen toward the unit main body.

    Note: If the focus point is the far end of the screen, change the measuring points (change from the bottom to the top and vice versa).

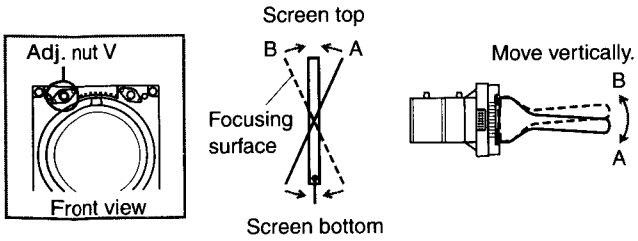

12. Adjust the focus at the bottom part precisely, then check that the focus at the top part is within the reference. If not, adjust again in the same way.
13. Perform the H zenith angle adjustment in the same way as above Steps.
14. Adjust the lens center focus so that ME pattern at the left part of the screen center can be best focused.
15. Look at the right part the screen center. Rotate the lens center focus to the "Left" and check if a best focus position exists. If so, take the point as "Left."
16. If not, adjust the focus at the left part of the screen to the best then look at the right part and rotate the lens focus to the "Right." Check if the best focus point exists. If so, take the point as "Right."
17. Adjust again the focus at the left part precisely.
18. Rotate the zenith angle adjustment nut (H) in the same direction as that obtained in Step 15 or Step 16 so that the focus at the right and the left can be the same.
    [Zenith Angle Adjustment Specification]
    Adjust the main lens focus precisely so that the left part (or the right part) of the center can be best focused. At this time, the best focus point of the right part (or the left part) of the center should be within 20 mm from the screen toward the unit main body.

    Note: If the focus point is the far end of the screen, change the measuring points (change from the left to the right and vice versa).

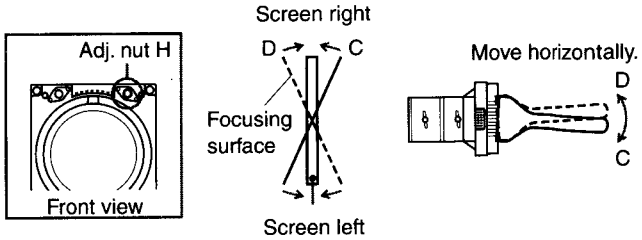

19. Adjust the focus at the left part precisely, then check that the focus at the right part is within the reference. If not, adjust again in the same way.
20. After completion of the above, roughly adjust the lens focus of the screen center again.
21. Adjust RED and BLUE in the same way as GREEN.

3-4-8. HWC (H Width Coil) Adjustment

Note: Perform this adjustment when the E board or deflection yoke has been replaced.

1. Set INPUT-A to the no-signal state, then select INPUT-A.
   Select the INT OSC PATTERN from INT. OSC menu with the MENU key, then select P3 (fH = 31.5 kHz, fV = 60 Hz).
2. Press the REGISTRATION CENT key and the ADJ G key to set the CENT GREEN adjustment mode and press the CUT OFF R key and B key to set GREEN only.
3. Adjust the GREEN center to the screen center.
4. Press the REGISTRATION SIZE key to set the SIZE GREEN adjustment mode, adjust the H.SIZE, move the left and right edges of the test pattern near the screen edge. Then press the REGISTRATION LIN key, set the LIN adjustment mode and adjust the linearity.
5. Repeat the SIZE and LIN adjustment to align the left and right edges of the test pattern to the screen edge. (If necessary adjust CENT again.)
6. Press the REGISTRATION CENT key and the ADJ R key to set CENT RED adjustment mode and press the CUT OFF B key to cut off BLUE.
7. Adjust the RED center to the GREEN center.
8. Perform LIN adjustment again to align the RED left and right edges of the test pattern to GREEN.
9. Set the RED H. SIZE data to "128."
10. Press the REGISTRATION CENT key and the ADJ B key to set CENT BLUE adjustment mode and press the CUT OFF R key to cut off RED.
11. Adjust the BLUE center to the GREEN center.
12. Perform LIN adjustment again to align the BLUE left and right edges of the test pattern to GREEN.
13. Set the BLUE H. SIZE data to "128."
14. Adjust RED HWC (LV1), GREEN HWC (LV2) and BLUE HWC (LV3) on the E board and perform adjustment so that any other two colors can be matched to the color with the smallest H SIZE values.

3-4-9. Video Size Adjustment

Note: Perform this adjustment when the E board ED board, or Green deflection yoke has been replaced.

1. Press the INPUT SELECT VIDEO key, input the NTSC monoscope signal and receive the image.
2. Press the CUT OFF R key and the B key to set GREEN only.
3. Press the MG FOCUS key and the ADJ G key to set MG FOCUS GREEN adjustment mode, then adjust the GREEN CENTER FOCUS (Mg-ALL).
4. Press the REGISTRATION CENT key and ADJ G key to set GREEN adjustment mode and adjust the hatch center to the screen center.
5. Press the RGB SHIFT key to set RGB SHIFT adjustment mode, input the monoscope signal and receive the signal.
   Further press the CUT OFF R key and the B key to set GREEN only. Adjust the monoscope center to the screen center with SHIFT adjustment.
6. Press the REGISTRATION SIZE key and set the SIZE GREEN adjustment mode. Press the PATTERN key several times to receive the monoscope signal, move the left and right edges of the monoscope near the screen edge, then press the REGISTRATION LIN key to set the LIN adjustment mode and adjust the linearity.
7. Press the CUT OFF R key and the B key to set GREEN only.
8. Repeat the SIZE and LIN adjustment (and CENT adjustment) and adjust the left and right edges of the monoscope to the screen edge.
   Note: To change the linearity considerably in H.LIN adjustment, perform the CENT adjustment again.
9. Press RGB SIZE key to set RGB SIZE mode. Adjust H SIZE data (Hc) to Maximum.
10. Press RGB SIZE key to set RGB SIZE mode. Adjust H SIZE data (Hf) to "145."
11. Press the MEMORY key.
12. Adjust RV2 on the EA board, and set the H size of the monoscope to 15.5 ±0.15 frames.

3-4-10. MG FOCUS Adjustment for 31.5 kHz Signal

1. Set INPUT-A to the no-signal state, then select INPUT-A.
   Select the INT OSC PATTERN from INT. OSC menu with the MENU key, then select P3 (fH = 31.5 kHz, fV = 60 Hz).
2. Press the REGISTRATION CENT key and the ADJ G key to set the CENT GREEN adjustment mode and press the CUT OFF key and B key to set GREEN only.
3. Adjust the GREEN center to the screen center (When it has been aligned, adjustment is not needed).
4. Press the REGISTRATION SIZE key to set the SIZE adjustment mode, adjust the H.SIZE and V.SIZE again.
5. Press the PATTERN key to output the cross-hatch pattern, and check that the image distortion has been roughly adjusted. (If not, adjust it again).
6. Press the MG FOCUS key to set the MG Focus adjustment mode, and press the PATTERN key several times to output the ME pattern.
7. Adjust ALL FOCUS at "POSITION No. 1" so that the ME pattern of the center can be focused in the optimum condition.
8. Adjust the GREEN main lens to make the focus of the central part optimum, then fix it.
9. Press the FUNCTION key to set to SPOT SHAPE ADJ mode.
10. Press the PATTERN key to output the dot pattern. Then press the POSITION (+) key to set to "POSITION No. 2" mode.
11. Move the AQP adjustment mode with ↑ and ↓ keys, then perform adjustment so that the dot can become most rounded.
12. Move the DQP adjustment mode with ↑ and ↓ keys, then perform adjustment so that the dot can become most rounded.
13. Move the AHP adjustment mode with ↑ and ↓ keys, then perform adjustment so that the dot can become most rounded.
14. Move the DHP adjustment mode with ↑ and ↓ keys, then perform adjustment so that the dot can become most rounded.
15. Repeat Steps 11 to 14 several times to adjust the dot to the most rounded conditions while adjusting the tracking.
16. Press the FUNCTION key to finish the SPOT SHAPE ADJ mode.
17. Press the PATTERN key several times to output the ME pattern.
18. Press the POSITION (+) key to set to "POSITION No. 2" mode.
19. Press the MG FOCUS key and the ADJ G key.
20. Press the CUT OFF R key and B key to set GREEN only on the screen.
21. Adjust the focus of the upper ME pattern to the optimum.
22. Move the AQP adjustment mode with ↑ and ↓ keys, adjust the focus of the upper ME pattern to the optimum.
23. Move the DQP adjustment mode with ↑ and ↓ keys, adjust the focus of the upper ME pattern to the optimum.
24. Repeat Steps 21 to 23 several times to adjust the ME pattern to the optimum while adjusting the tracking.
25. Press the POSITION (+) key to set to "POSITION No. 3" mode.
26. Adjust it in the same way as Steps 19 to 24.
27. Adjust "POSITION No. 4" to "POSITION No. 9" in the same way as Steps 25 and 26.
28. Press the MEMORY key to save the adjustment data.
29. Perform the MG FOCUS adjustment of RED and BLUE in the same way as GREEN.
30. Save the data after adjustment.

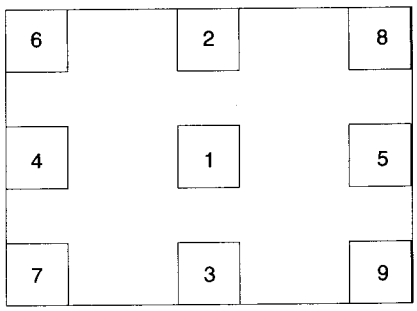

* The number in the figure indicates the POSITION during AQP, DOP, AHP, and DHP adjustments.

3-4-11. VIDEO Block MG FOCUS Adjustment

1. Press the INPUT SELECT VIDEO key, and receive the NTSC monoscope signal.
2. Press the MG FOCUS key and the ADJ G key to set the GREEN MG FOCUS adjustment mode and press the CUT OFF R key and B key to set GREEN only. Roughly adjust "ALL FOCUS" at POSITION No. 1.
3. Roughly adjust GREEN "CENT," "SIZE," "LIN," "BOW," "SKEW," "PIN" and "KEY."
4. Perform the rough adjustment of RED and BLUE in the same way as Steps 2 and 3.
5. Set the MG FOCUS GREEN adjustment mode again, and press the CUT OFF R key and the B key to set GREEN only.
6. Press the CONTR (+) key and set the contrast to the maximum.
7. Decrease the "ALL" data and increase the dot size.
8. Adjust AQP, DQP, AHP and DHP so that the dot can become dead-round.
9. Return the CONTR data back to "80."
10. Press the POSITION (+) key to set to "POSITION No. 1" mode.
11. Perform the "ALL-FOCUS" adjustment and adjust the focus of the ME pattern to the optimum.
12. Roughly adjust the GREEN centering again.
13. Using the same method as in 3-4-10, "3.15 kHz MG FOCUS Adjustment," adjust the GREEN MG FOCUS, AQP, DQP, AHP and DHP of "POSITION No. 2" to "POSITION No. 9" of the video signal block (15 kHz).
14. Adjust RED and BLUE in the same way as above.

3-4-12. MG FOCUS Adjustment for 64 kHz and 106 kHzSignals

1. Set INPUT-A to the no-signal state, then select INPUT-A. Select the INT OSC PATTERN from INP. OSC menu, then select P5 (fH = 64 kHz, fV = 60 Hz). Perform the same adjustment as Section 3-4-11 "Video Block MG FOCUS Adjustment."
2. Select P8 (fH = 106 kHz, fV = 85 Hz), then perform the same adjustment as Section 3-4-11 "Video Block MG FOCUS Adjustment."

3-4-13. Adjustment of Other Frequencies

Adjustment of the other frequencies are automatically performed by copying the adjusted data in accordance with the next adjustment "3-5. REGISTRATION ADJUSTMENT."

3-5. REGISTRATION ADJUSTMENT

3-5-1. INPUT MEMORY No. 0 Adjustment

1. Input the monoscope signal to VIDEO IN.
2. Press the BLKG key and move the top blanking outside the effective screen with the ↑ key.
3. Press the POSITION (+) key and move the bottom blanking outside the effective screen with the ↓ key.
4. Press the POSITION (+) key and move the left blanking outside the effective screen with the ← key.
5. Press the POSITION (+) key and move the right blanking outside the effective screen with the → key.
6. Press the MEMORY key.
7. Press the REGISTRATION CENT key and the ADJ G key to set the GREEN adjustment mode.
8. Adjust the vertical and horizontal lines to the screen center lines using the ↑, ↓, ← and → keys.
9. Press the REGISTRATION SIZE key to adjust the outer circumference of the cross-hair to the position 60 ±20 mm inside the screen using the ↑, ↓, ← and → keys.
10. Set the modes of LIN, SKEW, BOW, KEY, KEY (TOP/BOTTOM/LEFT/RIGHT), PIN, PIN (TOP/BOTTOM/LEFT/RIGHT) and ZONE, then adjust them to the values within the specification using the arrow keys (up to 21 blocks).

    Note:
    - **For adjusting four corners, use KEY, KEY (TOP/BOTTOM/LEFT/RIGHT), PIN, PIN (TOP/BOTTOM/LEFT/RIGHT). The adjusted value of "POSITION No. 1" – "POSITION No. 9" in ZONE adjustment should be "128 ±5."**
    - **When the size is deviated during adjustment, adjust it as required.**

11. Press the MEMORY key.
12. Press the REGISTRATION CENT key and the ADJ R key to set the RED adjustment mode, then adjust the vertical and horizontal lines of RED to the GREEN center lines using the ↑, ↓, ← and → keys.
13. Press the REGISTRATION SIZE key to adjust the outer circumference of the cross-hair to the position 60 ±20 mm inside the screen using the ↑, ↓, ← and → keys.
14. Set the modes of LIN, SKEW, BOW, KEY, KEY (TOP/BOTTOM/LEFT/RIGHT), PIN, PIN (TOP/BOTTOM/LEFT/RIGHT) and ZONE, then adjust them to the values within the specification using the arrow keys (up to 21 blocks).

    Note:
    - **For adjusting four corners, use KEY, KEY (TOP/BOTTOM/LEFT/RIGHT), PIN, PIN (TOP/BOTTOM/LEFT/RIGHT). The adjusted value of "POSITION No. 6 to "POSITION No. 9" in ZONE adjustment should be "128 ±5."**
    - **When the size is deviated during adjustment, adjust it as required.**

15. Press the MEMORY key.
16. Adjust BLUE in the same way.
17. Copy the adjusted data to INPUT MEMORY No. 1 and INPUT MEMORY No. 2.

3-5-2. INPUT MEMORY No. 3 Adjustment

1. Set INPUT-A to the no-signal state, then select INPUT-A. Select the INT OSC PATTERN from INT. OSC menu with the MENU key, then select P3 (fH = 31.5 kHz, fV = 60 Hz).
2. Press the BLKG key and move the top blanking outside the effective screen with ↑ key.
3. Press the POSITION (+) key and move the bottom blanking outside the effective screen with the ↓ key.
4. Press the POSITION (+) key and move the left blanking outside the effective screen with the ← key.
5. Press the POSITION (+) key and move the right blanking outside the effective screen with the → key.
6. Press the MEMORY key.
7. Press the REGISTRATION CENT key and the ADJ G key to set the GREEN adjustment mode.
8. Adjust the vertical and horizontal lines to the screen center lines using the ↑, ↓, ← and → keys.
9. Press the REGISTRATION SIZE key to adjust the outer circumference of the cross-hair to the position 60 ±20 mm inside the screen using the ↑, ↓, ← and → keys.
10. Set the modes of LIN, SKEW, BOW, KEY, KEY (TOP/BOTTOM/LEFT/RIGHT), PIN, PIN (TOP/BOTTOM/LEFT/RIGHT) and ZONE, then adjust them to the values within the specification using the arrow keys (up to 21 blocks).

    Note: When the size is deviated during adjustment, adjust it as required.

11. Press the MEMORY key.
12. Copy the adjusted data to INPUT MEMORY No. 4, INPUT MEMORY No. 11, and INPUT MEMORY No. 12.

3-5-3. INPUT MEMORY No. 5 Adjustment

1. Set INPUT-A to the no-signal state, then select INPUT-A. Select the INT OSC PATTERN from INT. OSC menu with the MENU key, then select P3 (fH = 64 kHz, fV = 60 Hz).
2. Press the BLKG key and move the top blanking outside the effective screen with the ↑ key.
3. Press the POSITION (+) key and move the bottom blanking outside the effective screen with the ↓ key.
4. Press the POSITION (+) key and move the left blanking outside the effective screen with the ← key.
5. Press the POSITION (+) key and move the right blanking outside the effective screen with the → key.
6. Press the MEMORY key.
7. Press the REGISTRATION CENT key and the ADJ G key to set the GREEN adjustment mode.
8. Adjust the vertical and horizontal lines to the screen center lines using the ↑, ↓, ← and → keys.
9. Press the REGISTRATION SIZE key to adjust the outer circumference of the cross-hair to the position 60 ±20 mm inside the screen using the ↑, ↓, ← and → keys.
10. Set the modes of LIN, SKEW, BOW, KEY, KEY (TOP/BOTTOM/LEFT/RIGHT), PIN, PIN (TOP/BOTTOM/LEFT/RIGHT) and ZONE, then adjust them to the values within the specification using the arrow keys (up to 21 blocks).

    Note: When the size is deviated during adjustment, adjust it as required.

11. Press the MEMORY key.
12. Copy the adjusted data to INPUT MEMORY No. 6 and INPUT MEMORY No. 7.

3-5-4. INPUT MEMORY No. 8 Adjustment

1. Set INPUT-A to the no-signal state, then select INPUT-A. Select the INT OSC PATTERN from INT. OSC menu with the MENU key, then select P3 (fH = 106 kHz, fV = 60 Hz).
2. Press the BLKG key and move the top blanking outside the effective screen with the ↑ key.
3. Press the POSITION (+) key and move the bottom blanking outside the effective screen with the ↓ key.
4. Press the POSITION (+) key and move the left blanking outside the effective screen with the ← key.
5. Press the POSITION (+) key and move the right blanking outside the effective screen with the → key.
6. Press the MEMORY key.
7. Press the REGISTRATION CENT key and the ADJ G key to set the GREEN adjustment mode.
8. Adjust the vertical and horizontal lines to the screen center lines using the ↑, ↓, ← and → keys.
9. Press REGISTRATION SIZE key to adjust the outer circumference of the cross-hair to the position 60 ±20 mm inside the screen using the ↑, ↓, ← and → keys.
10. Set the modes of LIN, SKEW, BOW, KEY, KEY (TOP/BOTTOM/LEFT/RIGHT), PIN, PIN (TOP/BOTTOM/LEFT/RIGHT) and ZONE, then adjust them to the values within the specification using the arrow keys (up to 21 blocks).

    Note: When the size is deviated during adjustment, adjust it as required.

11. Press the MEMORY key.
12. Copy the adjusted data to INPUT MEMORY No. 9 and INPUT MEMORY No. 10.

3-5-5. Horizontal/Vertical Reverse Mode Centering Adjustment

1. Turn off the power of the unit.
2. Set S2001 (Horizontal/Vertical Deflection Switch) on the EC Board to the reverse mode.
3. Turn on the power of the unit.
4. Input the NTSC monoscope signal.
5. Press the ON/STANDBY key on the remote commander or the control panel.
6. Check that the horizontal and vertical deflections are reversed.
7. Press the REGISTRATION CENT key and the ADJ G key to set the GREEN adjustment mode.
8. Adjust the horizontal and vertical centering using the ↑, ↓, ← and → keys.
9. Press the MEMORY key.
10. Adjust RED and BLUE in the same way as GREEN.
11. Turn off the main power switch.
12. Return S2001 (Horizontal/Vertical Deflection Switch) on the EC Board to the original settings.

3-6. WHITE BALANCE ADJUSTMENT

3-6-1. Preparations

Equipment required

VPH-G90 (Focus, size, registration, and lens focus had been adjusted completely.)

W/B checker: Philips PM5639/10

Test signal generator: Tektronix TSG-100 or equivalent

Note: If test signal generator is not available, use internal test signal.

Color temperature setting range

9300 °K/6500 °K/5400 °K/3200 °K + 8MPCD

1. Attach a lens-ball of the W/B checker to the lens.
2. Connect a test signal generator.
   If there is no test signal generator, use the test signals generate inside the unit. Press the W/B GAIN key, select 100 IRE White, then select 10 IRE with W/B BIAS key.
3. Press the ON/OFF key on the W/B checker.

Buttons on the Display Unit

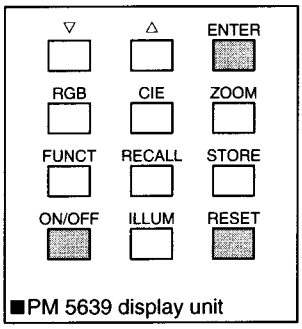

4. Press the FUNCTION key of the W/B checker, select "White reference" with ▲,▼ keys, then press the ENTER key.

FUNCTION

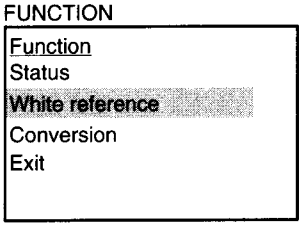

5. Select "1: fty. Ref" from the "White reference" menu with ▲,▼ keys, then press the ENTER key.

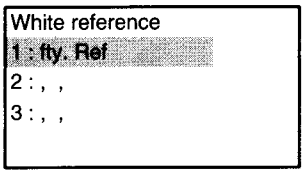

6. Press the RGB key, select "R&B/G" with ▲,▼ keys, then press the ENTER key.

RGB key function

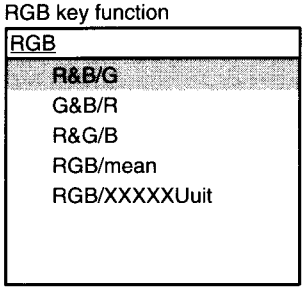

7. Color temperature and bars indications of the W/B checker are as follows:

Color Temp.	R	G	B	x	y
9300	50	100	60	0.283	0.297
6500	60	100	40	0.313	0.329
5400	60	100	30	0.335	0.349
3200	90	100	10	0.427	0.408

Unit: mm

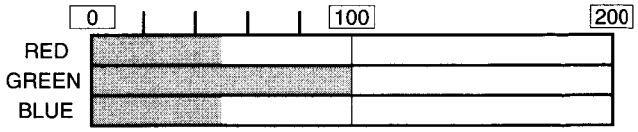

Bars display

3-6-2. Color Temperature Adjustment with a Test Signal Generator

■ Color Temperature 9300 °K Adjustment

1. Turn on the power and warm up for about 20 minutes.
2. Input the 100 IRE White signal to the VIDEO IN connector.
3. Press the W/B GAIN key, and select "9300" with POSITION +/– keys.
4. Press the PATTERN key several times to select the 100 IRE White signal input at VIDEO IN connector.
5. Press the ADJ G key to set the GREEN adjustment mode, and adjust the gain for maximum.
6. Press the STATUS OFF key to erase the characters displayed on the screen.
7. Attach the Lens-ball of the W/B checker to VPH-G90's lens.

[Gain Adjustment (100 IRE)]

Note: Normally, the maximum green bars indication is 200 %; however, it becomes 100 % in GREEN adjustment mode.

8. Press the ADJ B key to set the BLUE adjustment mode.
9. Press the W/B GAIN key. Adjust the blue gain for 60 % with ←, → keys. If not, decrease the green gain with arrow keys.
10. Press the ADJ R key to set the RED adjustment mode. Adjust the red gain for 50 % with ←, → keys.

[Bias Adjustment (10 IRE)]

11. Input the 10 IRE White signal to the VIDEO IN connector.
12. Press the ADJ G key to set the GREEN adjustment mode.
13. Press the W/B BIAS key. Press the CUT OFF R and B keys, then adjust the Y level for 180 % with ←, → keys.
14. Press the ADJ B key to set the BLUE adjustment mode. Adjust the blue gain for 60 % with ←, → keys.
15. Press the ADJ R key to set the RED adjustment mode. Adjust the red gain for 50 % with ←, → keys.
16. Repeat steps 8 to 10 and steps 11 to 15 several times.
17. Press the MEMORY key.
18. Remove the lens-ball attached in step 7.

■ Color Temperature 6500 °K Adjustment

1. Input the 100 IRE White signal to the VIDEO IN connector.
2. Press the W/B GAIN key, and select "6500" with POSITION +/– keys.
3. Press the PATTERN key several times to select the 100 IRE White signal input at VIDEO IN connector.
4. Press the ADJ G key to set the GREEN adjustment mode, and adjust the gain for maximum.
5. Press the STATUS OFF key to erase the characters displayed on the screen.
6. Attach the Lens-ball of the W/B checker to VPH-G90's lens.

[Gain Adjustment (100 IRE)]

Note: Normally, the maximum green bars indication is 200 %; however, it becomes 100 % in GREEN adjustment mode.

7. Press the ADJ B key to set the BLUE adjustment mode.
8. Press the W/B GAIN key. Adjust the blue gain for 40 % with ←, → keys. If not, decrease the green gain with arrow keys.
9. Press the ADJ R key to set the RED adjustment mode. Adjust the red gain for 60 % with ←, → keys.

[Bias Adjustment (10 IRE)]

10. Input the 10 IRE White signal to the VIDEO IN connector.
11. Press the ADJ G key to set the GREEN adjustment mode.
12. Press the W/B BIAS key. Press the CUT OFF R and B keys, then adjust the Y level for 180 % with ←, → keys.
13. Press the ADJ B key to set the BLUE adjustment mode. Adjust the blue gain for 40 % with ←, → keys.
14. Press the ADJ R key to set the RED adjustment mode. Adjust the red gain for 60 % with ←, → keys.
15. Repeat steps 7 to 9 and steps 10 to 14 several times.
16. Press the MEMORY key.
17. Remove the lens-ball attached in step 6.

■ Color Temperature 5400 °K Adjustment

1. Input the 100 IRE White signal to the VIDEO IN connector.
2. Press the W/B GAIN key, and select "5400" with POSITION +/− keys.
3. Press the PATTERN key several times to select the 100 IRE White signal input at VIDEO IN connector.
4. Press the ADJ G key to set the GREEN adjustment mode, and adjust the gain for maximum.
5. Press the STATUS OFF key to erase the characters displayed on the screen.
6. Attach the Lens-ball of the W/B checker to VPH-G90's lens.

[Gain Adjustment (100 IRE)]

Note: Normally, the maximum green bars indication is 200 %; however, it becomes 100 % in GREEN adjustment mode.

7. Press the ADJ B key to set the BLUE adjustment mode.
8. Press the W/B GAIN key. Adjust the blue gain for 30 % with ←, → keys.
9. Press the ADJ R key to set the RED adjustment mode. Adjust the red gain for 60 % with ←, → keys.

[Bias Adjustment (10 IRE)]

10. Input the 10 IRE White signal to the VIDEO IN connector.
11. Press the ADJ G key to set the GREEN adjustment mode.
12. Press the W/B BIAS key. Press the CUT OFF R and B keys, then adjust the Y level for 180 % with ←, → keys.
13. Press the ADJ B key to set the BLUE adjustment mode. Adjust the blue gain for 30 % with ←, → keys.
14. Press the ADJ R key to set the RED adjustment mode. Adjust the red gain for 60 % with ←, → keys.
15. Repeat steps 7 to 9 and steps 10 to 14 several times.
16. Press the MEMORY key.
17. Remove the lens-ball attached in step 6.

■ Color Temperature 3200 °K Adjustment

1. Input the 100 IRE White signal to the VIDEO IN connector.
2. Press the W/B GAIN key, and select "3200" with POSITION +/− keys.
3. Press the PATTERN key several times to select the 100 IRE White signal input at VIDEO IN connector.
4. Press the ADJ R key to set the RED adjustment mode, and adjust the gain for maximum.
5. Press the STATUS OFF key to erase the characters displayed on the screen.
6. Attach the Lens-ball of the W/B checker to VPH-G90's lens.

[Gain Adjustment (100 IRE)]

Note: Normally, the maximum green bars indication is 200 %; however, it becomes 100 % in GREEN adjustment mode.

7. Press the ADJ R key to set the RED adjustment mode.
8. Press the W/B GAIN key. Adjust the red gain for 90 % with ←, → keys.
9. Press the ADJ B key to set the BLUE adjustment mode. Adjust the blue gain for 10 % with ←, → keys.

[Bias Adjustment (10 IRE)]

10. Input the 10 IRE White signal to the VIDEO IN connector.
11. Press the ADJ G key to set the GREEN adjustment mode.
12. Press the W/B BIAS key. Press the CUT OFF R and B keys, then adjust the Y level for 180 % with ←, → keys.
13. Press the ADJ B key to set the BLUE adjustment mode. Adjust the blue gain for 10 % with ←, → keys.
14. Press the ADJ R key to set the RED adjustment mode. Adjust the red gain for 90 % with ←, → keys.
15. Repeat steps 7 to 9 and steps 10 to 14 several times.
16. Press the MEMORY key.
17. Remove the lens-ball attached in step 6.

3-6-3. Color Temperature Adjustment with No Test Signal Generator

■ Color Temperature 9300 °K Adjustment

1. Turn on the power and warm up for about 20 minutes.
2. Press the W/B GAIN key, and select "9300" with POSITION +/− keys.
3. Press the PATTERN key twice to select the internal 100 IRE White signal.
4. Press the ADJ G key to set the GREEN adjustment mode, and adjust the gain for maximum.
5. Press the STATUS OFF key to erase the characters displayed on the screen.
6. Attach the Lens-ball of the W/B checker to VPH-G90's lens.

[Gain Adjustment (100 IRE)]

Note: Normally, the maximum green bars indication is 200 %; however, it becomes 100 % in GREEN adjustment mode.

7. Press the ADJ B key to set the BLUE adjustment mode.
8. Press the W/B GAIN key. Adjust the blue gain for 60 % with ←, → keys. If not, decrease the green gain with arrow keys.
9. Press the ADJ R key to set the RED adjustment mode. Adjust the red gain for 50 % with ←, → keys.

[Bias Adjustment (10 IRE)]

10. Press the ADJ G key to set the GREEN adjustment mode.
11. Press the W/B BIAS key.
12. Press the PATTERN key twice to select the internal 10 IRE White signal.
13. Adjust the Y level for 180 % with ←, → keys.
14. Press the ADJ B key to set the BLUE adjustment mode. Adjust the blue gain for 60 % with ←, → keys.
15. Press the ADJ R key to set the RED adjustment mode. Adjust the red gain for 50 % with ←, → keys.
16. Repeat steps 7 to 9 and steps 10 to 15 several times.
17. Press the MEMORY key.
18. Remove the lens-ball attached in step 6.
19. Perform adjustment of 6500 °K/5400 °K/3200 °K in the same manner of above.

3-7. SIZE/SHIFT BLKG ADJUSTMENT

3-7-1. SIZE/SHIFT/BLKG of Video/HDTV Adjustment

1. Input the monoscope signal to VIDEO IN.
2. Press the INPUT SELECT VIDEO key to project the monoscope signal on the screen.
3. Press the RGB SHIFT key and adjust the center of the monoscope signal to the screen center using the ↑, ↓, ← and → keys.
4. Press the RGB SIZE key and adjust the horizontal and vertical sizes of the monoscope signal using the ↑, ↓, ← and → keys.
5. Press the BLKG key to adjust the screen top blanking to the position 40 ±10 mm outside the effective screen using ↑ and ↓ keys.
6. Press the MEMORY key.
7. Input the HDTV monoscope signal to INPUT A.
8. Press the MENU key and select Initial Setting 1, then select HDTV-YPBPR from INPUT A.
9. Select INPUT A to project the HDTV monoscope signal on the screen.
10. Press the RGB SHIFT key and adjust the center of the monoscope signal to the screen center using the ↑, ↓, ← and → keys.
11. Press the RGB SIZE key and adjust the horizontal and vertical sizes of the monoscope signal using the ↑, ↓, ← and → keys.
12. Press the BLKG key to adjust the screen top blanking to the position 40 ±10 mm outside the effective screen using ← and → keys.
13. Press the MEMORY key.
14. Press the MENU key and select Initial Setting 1, then select RGB from INPUT A.

3-7-2. Video Memory SIZE/SHIFT/BLKG Adjustments

1. Input the monoscope signal to VIDEO IN.
2. Press the INPUT SELECT VIDEO key to project the monoscope signal on the screen.
3. Select VIDEO MEMORY 1 using the SWITCHER/ VIDEO MEMORY/INDEX changing switch and the SWITCHER/VIDEO MEMORY/INDEX key.
4. Press the RGB SHIFT key and adjust the center of the monoscope signal to the screen center using the ↑, ↓, ← and → keys.
5. Press the RGB SIZE key and adjust the horizontal and vertical sizes of the monoscope signal to 4:3 using the ↑, ↓, ← and → keys.
6. Press the BLKG key to adjust the screen top blanking to the position 40 ±10 mm outside the effective screen using ↑ and ↓ keys.
7. Press the MEMORY key.
8. Store the data of VIDEO MEMORY 1 to VIDEO MEMORY 2 to 5, too.
9. Select VIDEO MEMORY 6.
10. Press the RGB SHIFT key and adjust the center of the monoscope signal to the screen center using the ↑, ↓, ← and → keys.
11. Press the RGB SIZE key and adjust the horizontal and vertical sizes of the monoscope signal to 4:3 using the ↑, ↓, ← and → keys.
12. Press the BLKG key to adjust the screen top blanking to the position 40 ±10 mm outside the effective screen using ← and → keys.
13. Store the data of VIDEO MEMORY 6 to VIDEO MEMORY 7–10, too.

3-8. HIGH VOLTAGE SCREEN DISTORTION ADJUSTMENT

1. Select INPUT A and input the fH = 64 kHz RGB stripe signal to the RGB terminals.
2. Press CONTR (+) and BRIGHT (+) to set the contrast and bright levels to the maximum.
3. Adjust RV1 of the EA board so that the left and right vertical lines of the stripes can be straight.

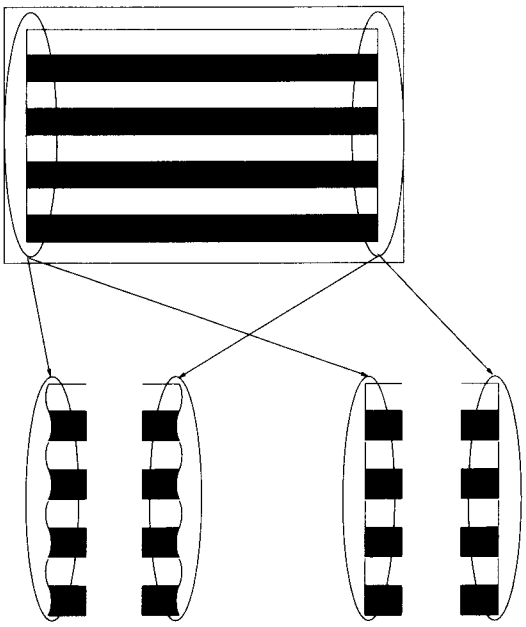

3-9. PROCEDURE AFTER COMPLETING ADJUSTMENTS

After completing all adjustment, change the dip switch S201-1 on the YA board from "OFF (right)" to "ON (left)" to save the adjustment data in the memory.

SECTION 4
SAFETY RELATED ADJUSTMENT

Note: When the following parts (⋈ and ◪ on the schematic diagrams) has been replaced, check and adjust the HV regulation circuit and HV hold down circuit.

PA board

⋈ components..... RV100, RV250
◪ components..... C607, C608, C610, C611, C155, C157, C250
R109, R111, R112, R114, R117, R118, R104, R105, R106, R107, R108, R120, R121, R157, R158, R250, R251, R252, R253, R256, R257, R258, R259, R260
RV101, RV150
D252, D253
IC101, IC102, IC100, IC152, IC153, IC250, IC251
L601, L602, L603, L604
PH500

CDR board

⋈ component RV965
◪ components..... R960, R967, R971, R972, R973, R974, R975, R1007
D960, D965
IC961, IC971, IC990

CDG board

⋈ component RV965
◪ components..... R960, R967, R971, R972, R973, R974, R975, R1007
D960, D965
IC961, IC971, IC990

CDB board

⋈ component RV965
◪ components..... R960, R967, R971, R972, R973, R974, R975, R1007
D960, D965
IC961, IC971, IC990

PB board

◪ components..... FBT10, FBT11

BA board

◪ components..... R839, R841, R847, R855, R848, R870, R873, R872, R877, R876
D806
IC804

Note: When the power supply block has been replaced, check that the +B MAX voltage is within 200 ±2 V.

4-1. PA BOARD HV REGULATOR/HV PROTECTOR ADJUSTMENT

Note: The electric power (+200 V) remains on the PA board for several minutes after even turning off the unit power. When withdrawing PA board from the unit, check that the voltage of TP600 (+200V HV) has dropped. In case of hurry, it may be allowed to discharge with the resistance of approx. 1 kΩ/3 W. In that case, withdraw the PA board after checking the power voltage.

1. Connect the cable from the high voltmeter with the output terminals of the chassis and the CRT (B) on HV block.

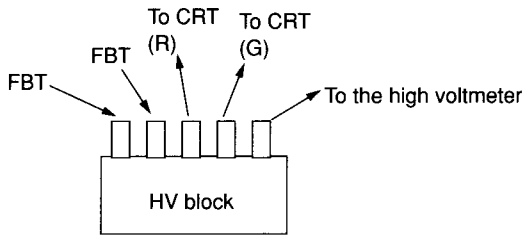

2. Input the monoscope signal.
3. Set CONTR to MAX by pressing the CONTR (+) key, then set BRIGHT to MAX by pressing the BRIGHT (+) key.
4. Rotate RV100 (HV.REG) of the PA board slowly to the right (clockwise) and adjust the high voltage to 34 kV.
   High voltage specification during HV.PROT adjustment: 34 ±0.3 kV
5. Rotate RV250 (HV.PROT) slowly to the left (counterclockwise) and stop when LED (D251) is lit. (In several second HV drops, then the power goes OFF.)
6. Cover RV250 with a rotation stopper cap and apply RVT to fix it.
7. Rotate RV100 to the left a little to turn the power ON.
8. Rotate RV100 slowly to the right and check that the power goes OFF at the high voltage of 34 kW.
   * If the specifications are not satisfied, perform Steps 4 to 8 again.
9. Rotate RV100 to the left a little to turn the power ON.
10. Press the MUTING PIC key on the remote commander to set to CUT OFF.

11. Adjust RV100 to set the high voltage to 33 kV.
    High voltage adjustment specification (during CUTOFF): 33.0 ±0.3 kV
12. Turn OFF the power, and cover RV250 with a rotation stopper cap and apply RVT to fix it.
13. Turn ON the power, and check that the high voltage is within the specification.
    High voltage adjustment specification (during CUTOFF): 33.0 ±0.3 kV
14. Check that the high voltage variation when the CONTR and BRIGHT are set to MIN and set to MAX using the remote commander is within the specification.
    High voltage variation specification: +0.2/−0.3 kV
    * If the specifications are not satisfied, perform Steps 10 to 13 again.
    * When readjusting RV100 and RV250, replace the VR and rotation stopper caps before readjustment.

15. Set CONTR and BRIGHT to 80 and 50 respectively using the remote commander.

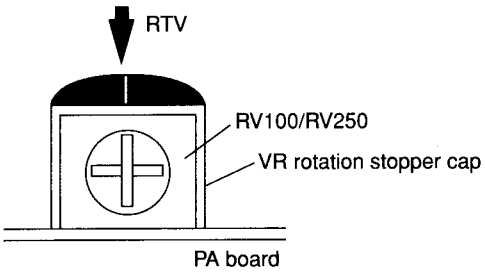

4-2. CRT PROTECTOR ADJUSTMENT

1. Connect a variable current source (3.5 mA to 4.5 mA) between the cathode terminal (pin 8 of CRT socket) of the CBR (CBG and CBB) board and B +12 V line of the CDR (CDG and CDB) board.
2. Connect a pull-up resistor (4.7 kΩ) between pin 3 of CN244 (CN264 and CN284) and +5 V line of the CDR (CDG and CDB) board, then connect an oscilloscope to it.
3. Gradually raise the output of the variable current source, and adjust RV965 of the CAR (CAG and CAB) board so that the waveform on the oscilloscope changes from "High" to "Low" level at 3.9 ±0.1 mA.

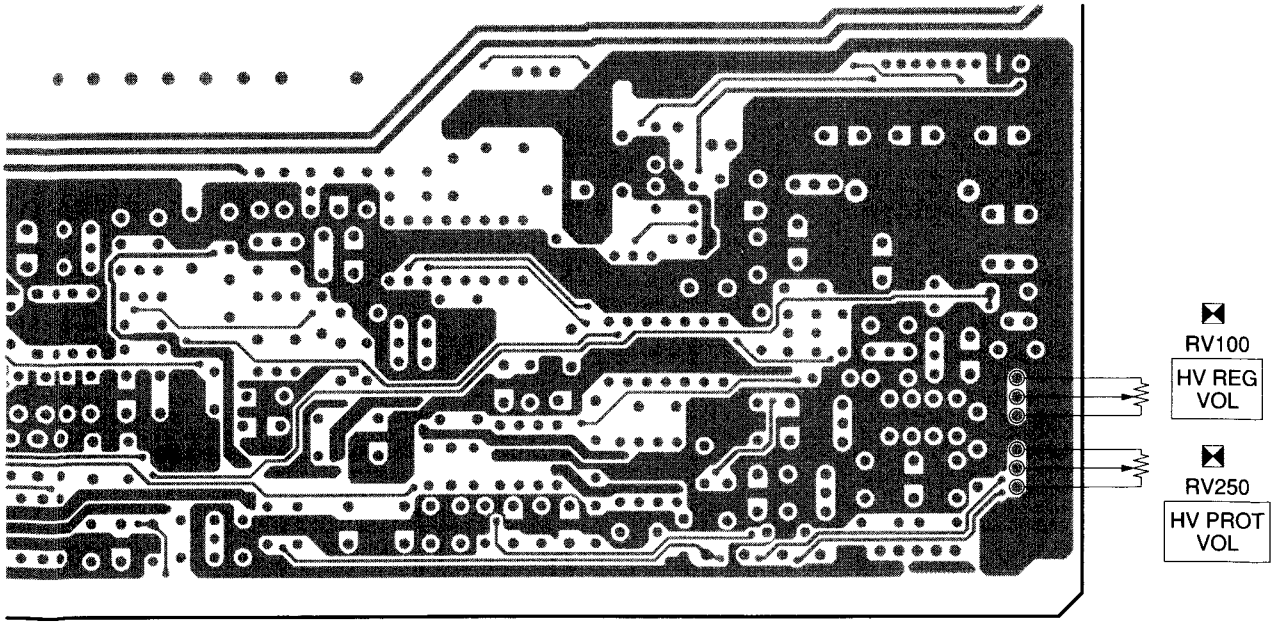

SECTION 5
CIRCUIT ADJUSTMENTS

Perform this section only when the components of each board have been replaced. When the completed board had been replaced, the following adjustments will not be required.

5-1. POWER BLOCK

5-1-1. DC (+) Adjustment

1. Remove the GA board, and connect it back through the extension board.
2. Connect a digital voltmeter to pin 1 and pin 3 of CN11 of the GA board.
3. Adjust RV101 on the GAA board of CN14 side so that the voltage becomes the following specification.
   Specification: 375 ±2 V
4. Connect a digital voltmeter to pin 6 and pin 4 of CN11 of the GA board.
5. Adjust RV101 on the GAA board of CN15 side so that the voltage becomes the following specification.
   Specification: 375 ±2 V

5-1-2. +115 V Adjustment

1. Remove the GB board, and connect it back through the extension board.
2. Connect a digital voltmeter to pin 2 and pin 6 of CN34 of the GB board.
3. Adjust RV403 on the GBB board so that the voltage becomes the following specification.
   Specification: 116 ±0.5 V

5-1-3. +200 V Adjustment

1. Remove the GB board, and connect it back through the extension board.
2. Connect a digital voltmeter to pin 1 and pin 6 of CN34 of the GB board.
3. Adjust RV404 on the GBB board so that the voltage becomes the following specification.
   Specification: 200 ±1.0 V

5-1-4. Oscillating Frequency Adjustment

1. Remove the GB board, and connect it back through the extension board.
2. Connect a frequency counter to the gate terminal of Q6 of the GB board.
3. Adjust RV201 on the GBA board so that the frequency becomes the following specification.
   Specification: 85 ±2 kHz
4. Connect a frequency counter to the gate terminal of Q10 of the GB board.
5. Adjust RV202 on the GBA board so that the frequency becomes the following specification.
   Specification: 95 ±2 kHz
6. Connect a frequency counter to the gate terminal of Q8 of the GB board.
7. Adjust RV402 on the GBB board so that the frequency becomes the following specification.
   Specification: 85 ±2 kHz
8. Connect a frequency counter to the gate terminal of Q12 of the GB board.
7. Adjust RV401 on the GBB board so that the frequency becomes the following specification.
   Specification: 100 ±2 kHz

5-2. BA BOARD ADJUSTMENT

5-2-1. Picture Control Adjustment

1. Connect an oscilloscope to TP1612 of the BA board.
2. Connect a communication controller to the RS-422A connector of the YA board.
   Note: Be sure to set this unit and the communication controller to the same baud rate.
3. Turn the power on.
4. Input the NTSC 100 % color bars signal.
5. Change the PICTURE (SUB PICTURE) data of CXA2101Q (IC1600) with a communication controller. Set the level "A (from the pedestal to 100 IRE)" so that it is closest value to 0.700 Vp-p.
6. Change the BRIGHT (SUB BRIGHT) data of CXA2101Q (IC1600) with a communication controller. Set the level "B" so that it is closest value to zero volt.

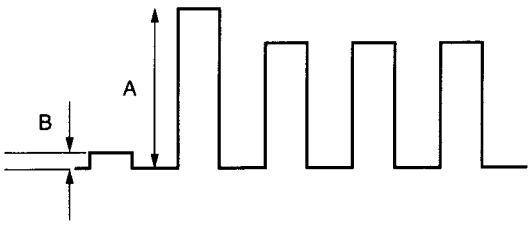

7. Input the NTSC 75 % color bars signal.
8. Change the SUB-COL (NT3.58EXB OFF) data and SUB-HUE (NT3.58) data of CXA2101Q (IC1600) with a communication controller. Set the levels "A, B, C, and D" so that they are visibly equal in amplitude.

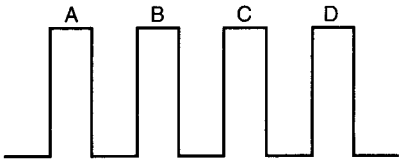

9. Input the SUB-COL (NT3.58EXB OFF) data adjusted in step 8 to SUB-COL (NT3.58EXB ON).
10. Input the PAL 75% color bars signal.
11. Change the SUB-COL (PALEXB OFF) data and SUB-HUE (PAL) data of CXA2101Q (IC1600) with a communication controller. Set the levels "A, B, C, and D" so that they are visibly equal in amplitude.
12. Input the same data as SUB-COL (PAL EXB OFF) adjusted in step 11 to SUB-COL (SECAM EXB OFF), SUB-COL (NT4.43EXB OFF), SUB-COL (PAL-M EXB OFF), SUB-COL (PAL EXB ON), SUB-COL (SECAM EXB ON), SUB-COL (NT4.43 EXB ON), and SUB-COL (PAL-M EXB ON).
13. Input the same data as SUB-HUE (PAL) adjusted in step 11 to SUB-HUE (SECAM), SUB-HUE (4.43), SUB-HUE (PAL-M), SUB-HUE (RGB), SUB-HUE (15kRGB), SUB-HUE (YPbPr), SUB-HUE (RGB), and SUB-HUE (IDTV).
14. Press the MEMORY key.

5-2-2. Signal Level Adjustment

1. Input the 10-STEP signal to VIDEO IN.
2. Set the CONTR and GAIN of each color to maximum position.
3. Connect 75 Ω resistor between pin-A/B/C16 (RED OUT) of connector CN341 on the BA board to ground. Connect 75 Ω resistors between pin-A/B/C18 (GREEN OUT) and ground, and pin-A/B/C20 (BLUE OUT) and ground of connector CN341 on the BA board toground.
4. Short-circuit between pin-B26 (ABL) of CN 340 on the BA board and ground.
5. Adjust RV502 (R), RV503 (G), and RV504 (B) on the BA board in sequence so that the amplitude of R, G, and B levels become 2 ±0.05 V.
6. Adjust RV501 on the BA board so that the sync level of GREEN OUT signal becomes the same level aspedestal level. Check to see that the sync levels of RED OUT and BLUE OUT signals are within the pedestal level.

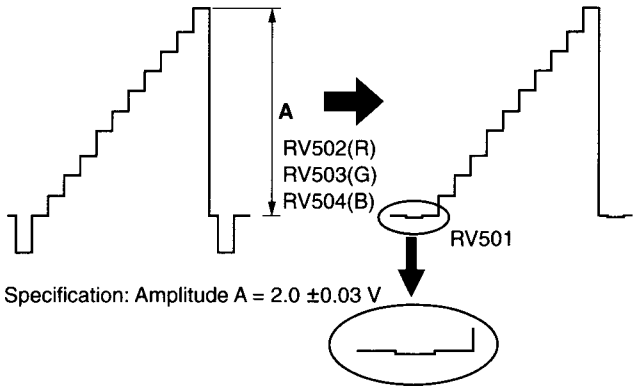

Note: Adjust the sync level so that it becomes the same level as pedestal level. If the sync level fluctuates, stop RV501 where it is stable position.

5-2-3. Analog Test Signal Amplitude Adjustment

1. Press the GAIN key to output the analog test signal.
2. Connect an oscilloscope to pin 4 of IC208 on the BA board.
3. Adjust RV200 on the BA board so that the level of analog signal meets the following specification.

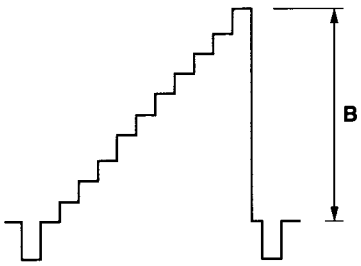

Specification: B = 0.7 ±0.02 V

5-2-4. ABL Adjustment

1. Receive the white signal.
2. Set the CONTR, BRIGHT, and GAIN to the maximum position.
3. Connect a digital voltmeter to base of Q813 on the BA board. Adjust RV800 so that the voltage is −3.34 ±0.05V.

5-3. CAR/CAG/CAB BOARDS ADJUSTMENT

5-3-1. Preparation Before Adjustments

1. Input the following signal.

Specification	fH:	64 kHz
	fV:	60 Hz
	Amplitude:	0.7 ±0.01 V
	Sync:	off

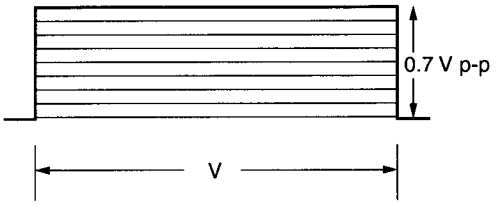

2. Remove the CAR/CAG/CAB boards and CDR/CDG/CDB board in sequence, and connect it back through the extension board.

5-3-2. Pedestal Level Adjustment

1. Connect an oscilloscope to TP511.
2. Adjust the pedestal level by RV145.

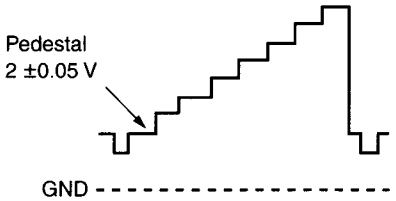

5-3-3. CRT Protector Adjustment

1. Connect a variable current source (3.5 mA to 4.5 mA) between the cathode terminal (pin 8 of CRT socket) of the CBR (CBG and CBB) board and B +12 V line of the CDR (CDG and CDB) board.
2. Connect a pull-up resistor (4.7 kΩ) between pin 3 of CN244 (CN264 and CN284) and +5 V line of the CDR (CDG and CDB) board, then connect an oscilloscope to it.
3. Gradually raise the output of the variable current source, and adjust RV965 of the CAR (CAG and CAB) board so that the waveform on the oscilloscope changes from "High" to "Low" level at 3.9 ±0.1 mA.

5-3-4. Cathode Level Adjustment

1. Apply the following voltages to CN244 (CN264 and CN284) of the CDR (CDG and CDB) board:
   CN244/CN264/CN284 Pin 1: +175 ±1 V
   CN244/CN264/CN284 Pin 10: +115 ±0.5 V
2. Connect an oscilloscope to TP1201 on the CBR (CBG and CBB) board, and adjust RV1223 so that the voltage becomes 113 ±0.5 V.
3. Connect an oscilloscope to base terminal of Q948 on the CDR (CDG and CDB) board, and adjust RV785 on the CAR (CAG and CAB) board so that the peak section of the black level becomes 109 ±0.5 V.
4. Adjust RV718 so that the amplitude of white peak section becomes 13 ±0.2 V.

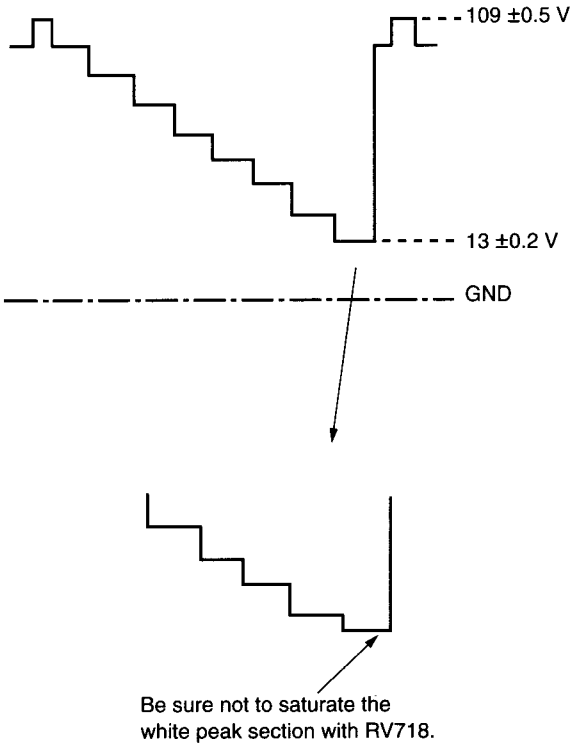

5-3-5. G1 Level Adjustment

1. Connect an oscilloscope to the plus (+) terminal of capacitor C820 on the CDR (CDG and CDB) board, and adjust RV682 so that the black level becomes 12 ±0.2 V.

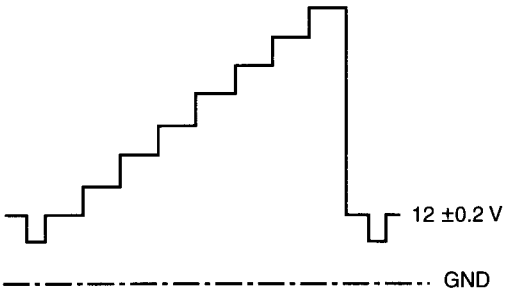

2. Connect an oscilloscope to TP891 of the CDR (CDG and CDB) board, and adjust RV623 so that the white peak section of the waveform doesn't clip.

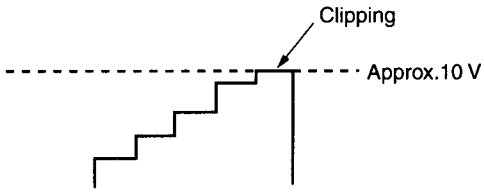

3. Connect an oscilloscope to TP891 on the CDR (CDG and CDB) board. Make sure that the peak section of the waveform clips when turn RV622 on the CAR (CAG and CAB) board counterclockwise. Turn RV622 gradually clockwise and stop it just before the limiter circuit works.

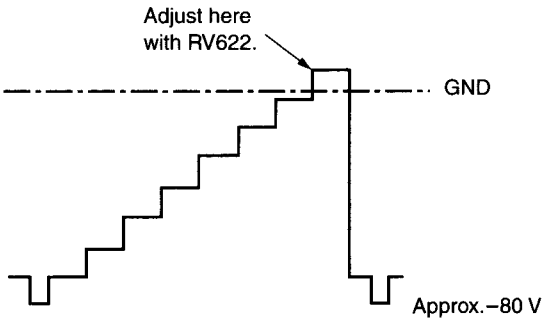

5-3-6. VPS Limiter Adjustment

Note: Be sure to perform this adjustment when increasing Contrast and if there is VPS (Video Peak Saturation) on the screen.

1. Input the signal which contains VPS components.
2. Set the unit in the EXPERT MODE.
3. Set the unit in SERVICE SETTING3/DEVICE CONTROL/VPS LIMITER mode, then press the ENTER key.
4. Cut off the color which is no VPS. If there are VPS on two or three colors, perform adjustment color by color.
5. Set the CONTR to maximum position.
6. Decrease the data value until the VPS disappears.
7. After the adjustment, press the MEMORY key.

5-4. DA/DB/DD BOARDS ADJUSTMENTS

5-4-1. F/V Voltage Adjustment (DA Board)

1. Input the signal of its horizontal frequency (fH) is 64 kHz to R/G/B INPUT connectors.
2. Connect a digital voltmeter to TP104.
3. Adjust RV101 so that the voltage at TP104 is 3 ±0.05 V.

5-4-2. AFC Adjustment (DA Board)

1. Set the HD OFF switch (S102) to "OFF" position.
2. Input the signal of its horizontal frequency (fH) is 64 kHz to R/G/B INPUT connectors.
3. Adjust RV104 to lock the horizontal sync properly on the screen.
4. Input the signal of its horizontal frequency (fH) is 150 kHz.
5. Adjust RV103 to lock the horizontal sync properly on the screen.
6. Input the video signal to the VIDEO INPUT connector.
7. Adjust RV105 to lock the horizontal sync properly on the screen.
8. Set the HD OFF switch (S102) to "ON" position.
9. Input the 15.75 kHz, 30 kHz, 64 kHz, 100 kHz, and 150 kHz signals in sequence, and make sure that the horizontal sync is locked properly.

5-4-3. V Hold Adjustment (DA Board)

1. Connect a frequency counter or oscilloscope to pin-C11 (V.TRIGGER) of connector CN170 or pin 12 of IC110.
2. Input the signal of its vertical frequency (fV) is 60 Hz to R/G/B INPUT connectors or VIDEO INPUT connector.
3. Set the V SYNC OFF switch (S101) to "OFF" position.
4. Adjust RV102 so that the frequency is 50 Hz (or one vertical period is 20 msec.).
5. Set the V SYNC OFF switch (S101) to "ON" position.
6. Input the 38 Hz, 50 Hz, 60 Hz, 100 Hz, and 150 Hz signals in sequence, and make sure that the vertical sync is locked properly.

5-4-4. H Parabola Waveform Adjustment (DA Board)

1. Input the signal of its frequency is 64 kHz.
2. Set the data value of H SIZE COARSE to "240."
3. Set the data value of V SIZE COARSE to "maximum."
4. Connect an oscilloscope to TP402.
5. Adjust RV301 so that A section of a waveform is identical with B section.
   Specification: A level = B level

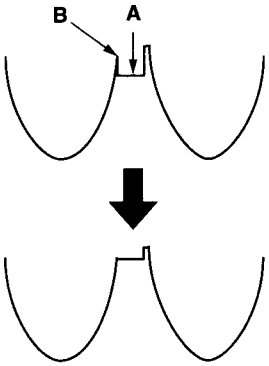

6. Adjust RV302 so that C section of a waveform is 0 ±0.01 V dc.
   Specification: C level = 0 ±0.01 V dc

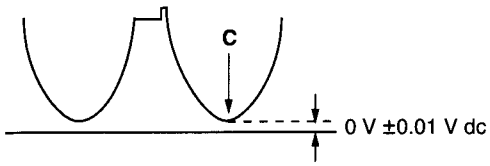

7. Repeat steps 5 and 6 until satisfy the specifications.

5-4-5. H SIN Adjustment (DA Board)

1. Input the signal of its frequency is 64 kHz.
2. Set the data value of H SIZE COARSE to "240."
3. Set the data value of V SIZE COARSE to "maximum."
4. Connect an oscilloscope to TP403.
5. Adjust RV402 so that A section of a waveform is identical with B section.
   Specification: A level = B level
6. Adjust RV403 so that voltage of A and B sections are 0 ±0.01 V dc.
   Specification: A and B voltages = 0 ±0.01 V dc
7. Repeat steps 5 and 6 until satisfy the specifications.

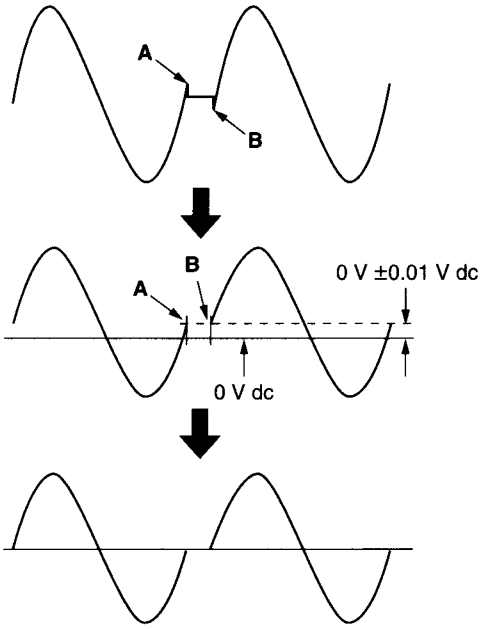

5-4-6. H SIN × VP Waveform Adjustment (DB Board)

1. Input the signal of its frequency is 64 kHz.
2. Set the data value of H SIZE COARSE to "250."
3. Set the data value of V SIZE COARSE to "180."
4. Connect an oscilloscope to TP102.
5. Adjust RV202 so that A section of an envelope waveform is 0 V.

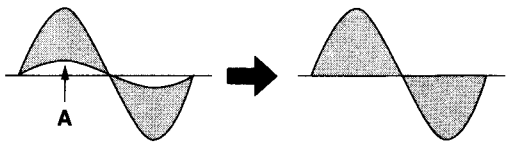

5-4-7. H SIN × V SIN Waveform Adjustment (DB Board)

1. Input the signal of its frequency is 64 kHz.
2. Set the data value of H SIZE COARSE to "250."
3. Set the data value of V SIZE COARSE to "180."
4. Connect an oscilloscope to TP101.
5. Adjust RV102 so that A and B sections of a waveform become even with C section as shown in the figure.

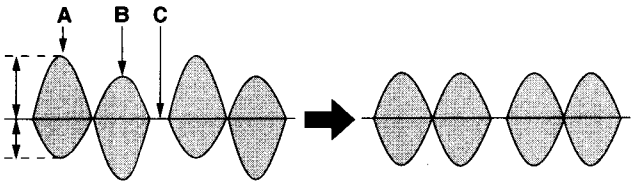

6. Adjust RV101 so that C section of a waveform is 0 V.

5-4-8. HS × VS Waveform Adjustment (DB Board)

1. Input the signal of its frequency is 64 kHz.
2. Set the data value of H SIZE COARSE to "250."
3. Set the data value of V SIZE COARSE to "180."
4. Connect an oscilloscope to TP104.
5. Adjust RV402 so that A and B sections of a waveform become even with C section as shown in the figure.

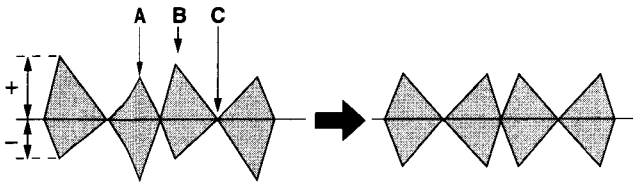

6. Adjust RV401 so that C section of a waveform is 0 V.

5-4-9. HP × V SIN Waveform Adjustment (DB Board)

1. Input the signal of its frequency is 64 kHz.
2. Set the data value of H SIZE COARSE to "250."
3. Set the data value of V SIZE COARSE to "180."
4. Connect an oscilloscope to TP301.
5. Adjust RV302 so that A section of a waveform become even with B section as shown in the figure.

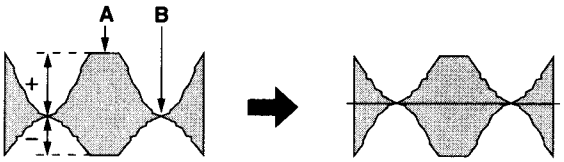

6. Adjust RV301 so that B section of a waveform is 0 V.

5-4-10. 1/2 SIN1 Waveform Adjustment (DB Board)

1. Input the signal of its frequency is 64 kHz.
2. Set the data value of H SIZE COARSE to "250."
3. Set the data value of V SIZE COARSE to "180."
4. Connect an oscilloscope to TP702.
5. Adjust RV703 so that A section of a waveform become even as shown in the figure.

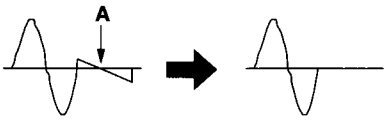

6. Adjust RV704 so that A section is 0 V.

5-4-11. 1/2 SIN2 Waveform Adjustment (DB Board)

1. Input the signal of its frequency is 64 kHz.
2. Set the data value of H SIZE COARSE to "250."
3. Set the data value of V SIZE COARSE to "180."
4. Connect an oscilloscope to TP701.
5. Adjust RV701 so that A section of a waveform become even as shown in the figure.

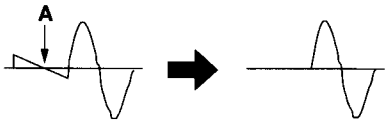

6. Adjust RV702 so that A section is 0 V.

5-4-12. HS × VS Waveform Adjustment (DB Board)

1. Input the signal of its frequency is 64 kHz.
2. Set the data value of H SIZE COARSE to "250."
3. Set the data value of V SIZE COARSE to "180."
4. Connect an oscilloscope to TP601.
5. Adjust RV601 so that A section of a waveform become even as shown in the figure.

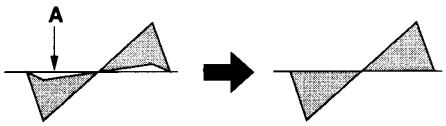

6. Adjust RV602 so that A section is 0 V.

5-4-13. HP × VS Waveform Adjustment (DB Board)

1. Input the signal of its frequency is 64 kHz.
2. Set the data value of H SIZE COARSE to "250."
3. Set the data value of V SIZE COARSE to "180."
4. Connect an oscilloscope to TP602.
5. Adjust RV603 so that A section of a waveform become even as shown in the figure.

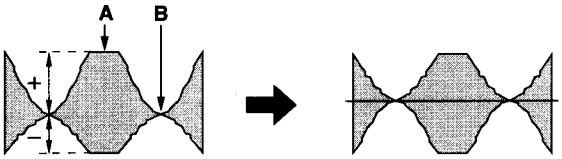

6. Adjust RV604 so that A section is 0 V.

5-4-14. B KEY Waveform Adjustment (DB Board)

1. Input the signal of its frequency is 64 kHz.
2. Set the data value of H SIZE COARSE to "250."
3. Set the data value of V SIZE COARSE to "180."
4. Connect an oscilloscope to TP502.
5. Adjust RV502 so that A section is 0 V.

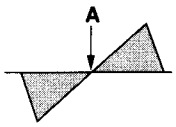

5-4-15. T KEY Waveform Adjustment (DB Board)

1. Input the signal of its frequency is 64 kHz.
2. Set the data value of H SIZE COARSE to "250."
3. Set the data value of V SIZE COARSE to "180."
4. Connect an oscilloscope to TP501.
5. Adjust RV501 so that A section is 0 V.

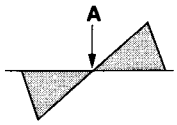

5-4-16. 1/2H Switching Waveform Adjustment (DA/DB Boards)

1. Input the signal of its frequency is 15 kHz.
2. Connect an oscilloscope to TP501 on the DB board.
3. Adjust RV303 on the DA board so that the switching point (A) coincides with 0V cross-point as shown in the figure.

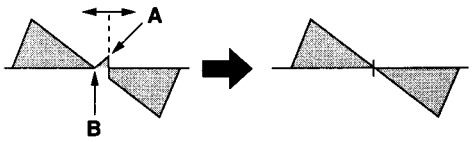

5-4-17. D/A Converter Offset Adjustment (DD Board)

1. Pull out the DB board, then inset the extension board instead. Short-circuit pins B32 and C32 of the extension board's connector with a jumper wire.
2. Short-circuit both ends of capacitors C136 and C342 on the DD board with a jumper wires respectively.
3. Turn on the power.
4. Adjust RV301 so that the voltage at pin-A5 of CN211 is 0 ±0.01 Vdc.
5. Adjust RV302 so that the voltage at pin-A3 of CN211 is 0 ±0.01 Vdc.
6. Adjust RV303 so that the voltage at pin-A1 of CN211 is 0 ±0.01 Vdc.
7. Adjust RV304 so that the voltage at pin-A11 of CN211 is 0 ±0.01 Vdc.
8. Adjust RV305 so that the voltage at pin-A9 of CN211 is 0 ±0.01 Vdc.
9. Adjust RV306 so that the voltage at pin-A7 of CN211 is 0 ±0.01 Vdc.

5-5. VCO OFFSET/LIMITER ADJUSTMENT

Note: The electric power (+200 V) remains on the PA board for several minutes after even turning off the unit power. When withdrawing the PA board from the unit, check that the voltage of TP600 (+200 HV) has dropped. In case of hurry, it may be allowed to discharge with the resistance of approximately 1 kΩ/3 W. In that case, withdraw the PA board after checking the power voltage.

1. Turn off the power of the unit, then disconnect CN87 from the PA board.
2. Connect an oscilloscope to TP152 (HVDRV), and connect a voltmeter to TP151 (VCO IN) on the PA board.
3. Turn on the power of the unit.
4. Adjust RV101 (VCO LIMIT VOL) on the PA board so that the voltage at TP151 is 2.00 ±0 .01 V.
5. Adjust RV150 (VCO RANGE) on the PA board so that the pulse width at TP152 is 54.5 ±0.1 kHz
6. Adjust RV101 (VCO LIMIT VOL) on the PA board so that the voltage at TP151 is 1.70 ±0 .01 V.
7. Turn off the power of the unit, then remove the oscilloscope and voltmeter from the PA board.
8. Connect CN87 connected in step 1.

5-6. YA BOARD REPLACEMENT

5-6-1. Replacement Procedure

1. Remove the defective YA board
   Remove IC233, IC333, and IC334 from the YA board removed, and attach all to the new YA board.
   * IC233 : Boot program/Uploader program
     IC333 : User data save
     IC334 : Factory data save/Service data save/User data back up
2. During this time, be careful of the direction for attaching the ICs, and make sure no pins are bent, etc.
3. Set the rotary switches of the new board to the same value as the old board.
   * IC233 : Need not be replaced if the Ver. No. on the ROM is the same.
4. Attach the new board to the unit and check operations. If normal, the 7-segment LED on the YB board should change as follows when AC is turned ON.
   Red : 88 (Approx. 0.5 seconds) → Orange : 88 (Approx. 1.0 second) → Off
5. If images are displayed correctly when the power is turned on, it means that the board was replaced successfully.
   → Check the software version from the menu, upload the program as necessary if the version is old. Adjust the various data as necessary, and create and save the factory data and service data. (Refer to the next page for details on creating data.)

If the board operations appear abnormal;

- If an error code is displayed, follow the instructions.
- If the 7-segment LED of the YB board does not change from Red : 88.
  → The CPU-bus may be abnormal. Check the short-circuit of each bus line.
- Other problems after turning on the power.
  → Repair the circuit block with abnormal operations (See Block Diagram).

5-6-2. Uploading Program (Emergency Mode)

1. When the 7-segment LED of the YB board changes as follows when the AC is turned ON, the program upload mode will forcibly be set due to the abnormal program data inside. (Emergency mode)
   Red : 88 (Approx. 0.5 seconds) → Orange : 88 (Approx. 1.0 seconds) → Green : 10 (blinks twice) → Green : 11 (communication standby)
2. Prepare to upload program.
   Preparations : Set the S961 knob to the left.
   (RS-232C ↔ RS-422A switch)
   Connect the RS-232C controller.
3. Start the uploader software of the RS-232C controller, and start uploading the program data according to the proper procedure.
   The 7-segment LED on the YB board changes as follows;
   Green : 11 (loding) → Green :12 (updating) → Green : 11 → Green : 12 → (repeated) → Green : ZF (Aoorix. 0.5 seconds) → Red : 88 (Approx. 0.5 seconds) → Orange : 88 (Approx. 1.0 seconds) → Off
4. Initialization ends after about 11 minutes.
   → If Green : 30 (Lit) lights up on the 7-segment LED of the YB board without going off, it means that the software is requesting initialization of the user SRAM. Press S202 for about 5 seconds in the Green : 30 (lit) state, and the 7-segment LED should change as follows.
   Green :30→31 (Approx. 0.1 seconds) → Off
   End of intialization
   * Take note that initializing the user SRAM erases all user data.
5. Turn on the power and check operations.

5-6-3. Creating Factory Data

To forcibly overwrite current factory data

1. Set S201-(1) to OFF in the AC OFF state.
   → Initial setting for entering the factory mode.

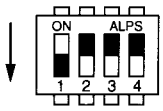

2. Perform AC ON, various adjustments, settings, data saving (user area).
3. In the AC ON state (or Standby state), set S201-(1) to ON.
   → The data will automatically be overwritten when the factory mode is exited.

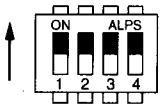

4. The 7-segment LED changes from 38 lit to off.
   * Duration of 38 lit is changed in accordance with data amount adjusted.
5. End of creating data

If data needs to be created again due to program version upgrading and parts replacement (IC334)

1. In the AC OFF state, set S201-(1) to OFF.
   → Initial setting for entering the factory mode.

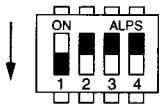

2. Perform AC ON, various adjustments, settings, data saving (user area).
3. In the AC ON state (or Standby state), set S201-(1) to ON.
   → The data will automatically be overwritten when the factory mode is exited.

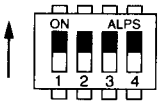

4. The 7-segment LED changes as follows;
   37 (approx. 90 seconds) → 38 (approx. 40 seconds) → Off
5. End of creating data

5-6-4. Creating Service Data

To forcibly overwrite existing service data

1. Enter the service mode in the AC ON state, and perform various adjustments, settings, data saving (user area).
2. Set the normal state. (Nothing displayed on OSD)
3. Press the ENTER key for about 5 seconds.
   → As the message "Do you save all data as SERVICE DATA?" will be displayed on the OSD, select "YES."
4. The 7-segment LED changes from 35 lit to off.
   * Duration of 35 lit is changed in accordance with the data amount adjusted.
5. End of creating data

If data needs to be created again due to program version upgrading and parts replacement (IC334)

1. Enter the service mode in the AC ON state, and perform various adjustments, settings, data saving (user area).
2. Set the normal state. (Nothing displayed on OSD)
3. Press the ENTER key for about 5 seconds.
   → As the message "Do you save all data as SERVICE DATA?" will be displayed on the OSD, select "YES."
4. The 7-segment LED changes as follows;
   * 34 (approx. 90 seconds) → 35 (approx. 40 seconds) → Off
5. End of creating data

SECTION 6
SEMICONDUCTORS

AD826AR
MAX3085CSA-TG068

(TOP VIEW)

AD835AR
BA05FP-E2
BA09FP-E2
BA033FP-E2
CXA1211M
MAX4121CSA-TE2
MM1112XFF
NJM082BM-T1
NJM2240M
TC7W08F
TC7W241FU-TE12R
µPC393C

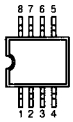

(TOP VIEW)

BA12FP-E2

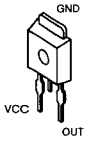

CXA1450M
GS4981CTA
LM393PS
LM6361M
NJM2235M-TE2
NJM4200M
SN75157PS-ELL2000
TC4W53F
TC4W53FU
TL082ACP
TL082M
µPC358C
µPC393G2
µPC4558C
µPC4558G2

(TOP VIEW)

CXA1470AS
LM1283

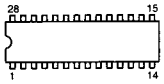

(TOP VIEW)

CXA1726AM
CXA2119M

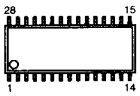

(TOP VIEW)

CXA1855Q

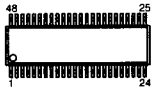

(TOP VIEW)

CXA2016S
TDA9141-N2C
µPC1377C

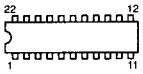

(TOP VIEW)

CXA3069S

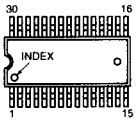

(TOP VIEW)

CXA1875AM-T4
CXA8038P
MAX8213BCSE-TE2
MB86022PF
MC10H124M
MC74HC4053F
MC74HC4538F
MP7670AS-TE2
PCF8574T-T
SN74HC109ANS
SN74HC157ANS
TC74HC123AF
TC74HC4538AF
TC74VHC123AF
TC74VHC138F
TC74VHC139F
TC74VHC157F

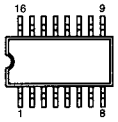

(TOP VIEW)

CXD305-127R

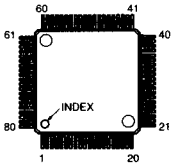

(TOP VIEW)

CXA2101Q
CXD2024AQ
CXP846P48Q-1-004

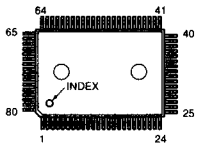

(TOP VIEW)

CXD2309Q-T6

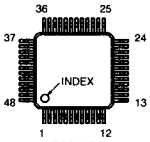

(TOP VIEW)

CXD8773R

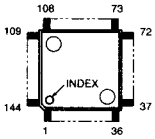

(TOP VIEW)

DS1245Y-120

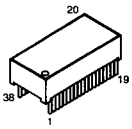

EPM7064STC44

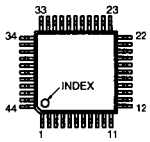

(TOP VIEW)

EPM7128STC100

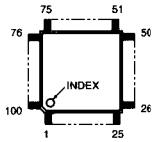

(TOP VIEW)

HD14538BFP
IDA4665T/V5-118
MC14572UBCP
MC74HC4053F
SN74LS123N
TC4040BP
µPC1394C

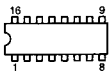

(TOP VIEW)

ICS1522MT
µPC659AGS-E2

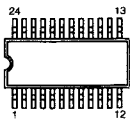

(TOP VIEW)

IDT74FCT162245CTPA-TL

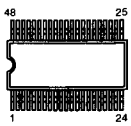

(TOP VIEW)

IDT71016S15Y-TL

(TOP VIEW)

IDT71024S15Y-TL

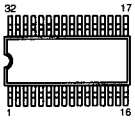

(TOP VIEW)

IDT71321SA55J-TL

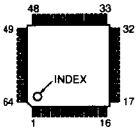

(TOP VIEW)

LM35DZ

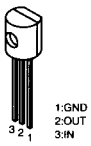

LM675T

LM2576T-12LB03

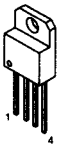

LM2990SX
LM2990T-5.0

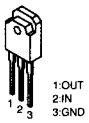

LM7912CT
NJM7912FA

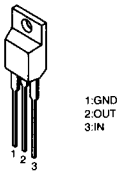

MAX202ECSE-T
SN74HC08AN
SN74HC32ANS
SN74HC125ANS
TC74HCT08AF(EL)
TC74VHC14F
TC74VHC132F

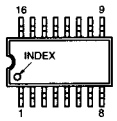

(TOP VIEW)

MAX489ECSD-TE2

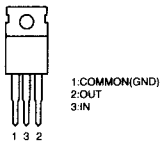

(TOP VIEW)

MAX4223ESA-TG06
MAX4224ESA-TG06

(TOP VIEW)

MB90091APF-114

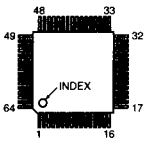

(TOP VIEW)

MBM29F800BA-70PFTN

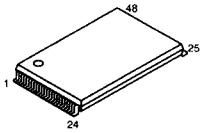

MC10H125H

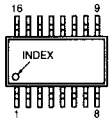

(TOP VIEW)

MC10H640FNR2

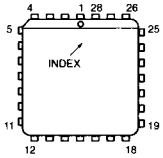

(TOP VIEW)

LM2901M
LM324N
M51978P
MC1436CP1
MC1495BP
SN74LS624N
SN74HCU04ANS-E20
TLC2932IPW

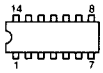

(TOP VIEW)

MC8639A

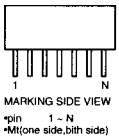

NJM78L05A

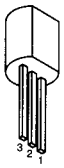

NJM78L12A

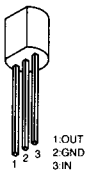

NJM79L05UA

NJM79L12A

NJM79M12DLA (TE1)

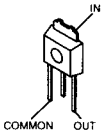

NJM2533M(TE2)

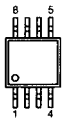

(TOP VIEW)

PC16552DV

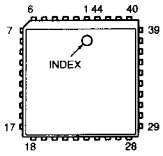

(TOP VIEW)

PQ20VZ5U

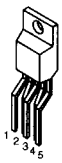

PST574C-T
PST575DMT-T1

RH5VL43AA-T1

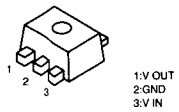

STK392

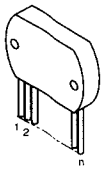

SC7S04F
SC7S32F
TA75C558F
TC4S66F
TC7S08F
TC7S66F
TC7S86F-TE85L

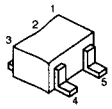

TA78M09F (TE16L)

TA7812S
TA7820S
µPC2405HF

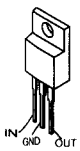

TC7W00F (TE12R)
TC7W04F
TC7WU04F

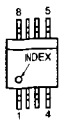

(TOP VIEW)

TC74HC541AF(EL)
TC74HCT541AF(EL)
TC74VHC245F

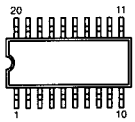

(TOP VIEW)

TL431CLP

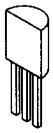

TLC5733AIPM

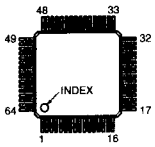

(TOP VIEW)

µPC319G2

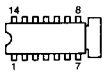

(TOP VIEW)

µPC319G2-E2

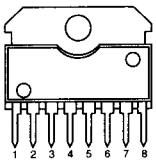

(TOP VIEW)

µPC814G2-E2

(TOP VIEW)

µPC1093J-1-T

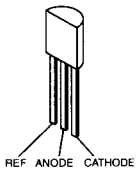

µPD6408GF-3BA

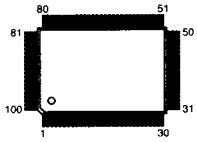

(TOP VIEW)

µPD65646GJ-252-8EU

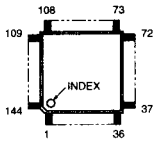

(TOP VIEW)

µPD65654GC-327-3B6

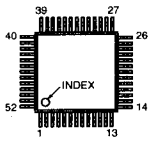

(TOP VIEW)

2SA1162-G
2SA1462-Y33
2SA1669-TB
2SC2712-YG
2SC3356-(R25)
2SC3545-T43
DTC114EK
DTC144EKA-T146

2SA1150-Y
2SA1175-HFE
2SC2785-HFE
DTC144ESA

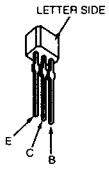

FMS1

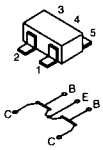

FMS1A-T148

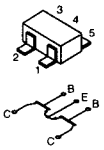

FMS2

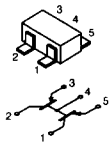

FMW1
FMW5

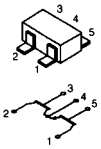

IRFP350LF20

IRFP460

2SD1878-CA
IRFI9620GS

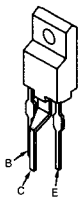

2SA1358-Y
2SC3421-Y

2SA1381-E
2SA1406-E
2SA1407-D
2SB772-Q
2SC2688-LK
2SC3503-DE
2SD882-P

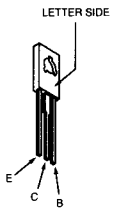

2SA1804-RO
2SC4689N-RO
2SC5238-CB

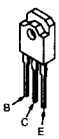

2SB734-34
2SD774-34

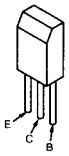

2SB798-DL
2SC2954
2SD999-CLCK

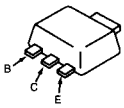

2SC3356-R24

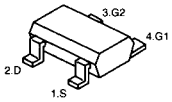

2SC4054N

2SC4630LS

2SD1590-L

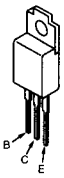

2SJ143
2SK755
2SK929

2SK160-K4
2SK160-K5

2SK523-M1

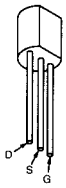

2SK817

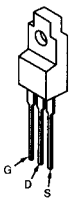

1SS184
DAN202K

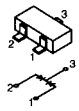

1SS226
DA204K

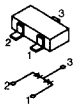

DD50R

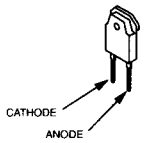

1SS83
DFC15TR
EGP10D
ERA22-08
ERC91-02

DTZ-TE-17-2.7B
DTZ-TE-17-3.6B
DTZ-TT-11-3.3B
DTZ10B
DTZ4.7C
MA111
RD5.6SB

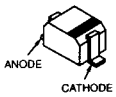

ESAD39M-06C
F10P40F

1SS119-25
11EQS04
D1NL20U-TR
D1NS4
RB441Q-40T-77
RD2.2M-T1B
RD4.7ESB2
RD5.1ESB2
RD5.6ESBS
RD6.2ESB2
RD6.8SB2-T1
RD10ESB2
RD10M-B2
RD11ESB2
RD12ESB2
RD13ESB2
RD15ESB2
RD20ESB2
RD20M-B2
RD30ESB2
RU-1C

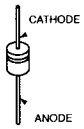

D8LC20UR
D10LC20U
D10SC6MR

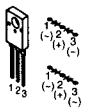

D10SC6M
DD82RC-SONY

ERC88M-009

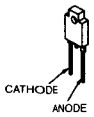

FCF10A60

IS2836

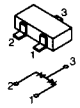

MA8039

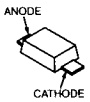

MVR3368S

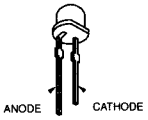

PY5504S-1

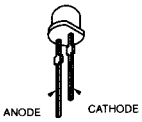

RBV-2506

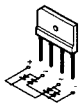

RD3.3M-B2
RD4.7M-B2
RD5.1M-B2
RD12M-B1
RD12M-B2
RD15M-T1B2

RD12SB2

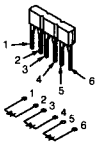

SB20-03P

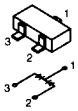

SB30-03P-TD

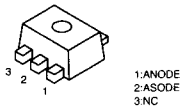

SLR-54VC12

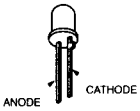

S16L60

V09G
V11N

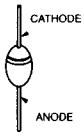

1SR154-400TE-25

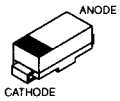

SECTION 7
EXPLODED VIEWS

NOTE:

- Items with no part number and no description are not stocked because they are seldom required for routine service.
- The construction parts of an assembled part are indicated with a collation number in the remark column.
- Items marked "*" are not stocked since they are seldom required for routine service. Some delay should be anticipated when ordering these items.

The components identified by mark ⚠ are critical for safety. Replace only with part number specified.

Les composants identifies par une marque ⚠ sont critiques pour la securite. Ne les remplacer que par une piece portant le numero specifie.

7-1. HOOD AND COVER BLOCK

Ref.No.	Part No.	Description	Remark
1	* X-4036-168-2	HOOD ASSY	2—15
2	4-055-940-01	FASTENER	
3	4-055-953-01	RING, FASTENER	
4	* 4-067-664-01	DOOR, ADJUST	
5	* 4-067-772-01	HOLDER, HANDLE	
6	* 4-067-777-01	HOLDER, SPRING	
7	* 4-067-827-01	SPACER (H)	
8	* 4-067-774-01	HOOK (L), HOOD	
9	* 4-067-773-01	HOOK (R), HOOD	
10	* 4-067-778-01	SPACER, HOOD	
11	* 4-067-826-01	SPRING, EXTENSION	
12	4-314-843-02	SCREW, TAPPING, +4X12	
13	* 4-067-677-02	HINGE, DOOR	
14	* X-4036-165-1	COVER ASSY, COMMANDER	
15	4-069-146-01	HOLDER, HOOD	
16	4-067-823-01	SCREW (+PWH M4X12)	
17	* 4-067-676-01	FILTER, REAR	
18	* 4-067-775-01	HOLDER, REAR FILTER	
19	* 4-067-669-01	COVER, REAR	
20	3-701-810-91	SCREW, TERMINAL	
21	* X-4036-171-1	COVER (R) ASSY, SIDE	
22	* X-4036-170-1	COVER (L) ASSY, SIDE	
23	* 4-067-824-01	SPRING, FRONT	
24	* 4-067-776-01	HOLDER, FRONT	
25	* 4-067-825-01	FILTER, FRONT	
26	* 4-067-670-01	COVER, FRONT	
27	4-067-784-02	LEVER, ADJUST	
28	* 4-068-518-01	GASKET (RS)	

◇ : 7-682-663-09 +PSW4 × 12
✚ : 7-682-964-01 +PSW4 × 14
● : 7-685-648-79 +BVTP3 × 12
✚ : 7-685-660-79 +BVTP4 × 10

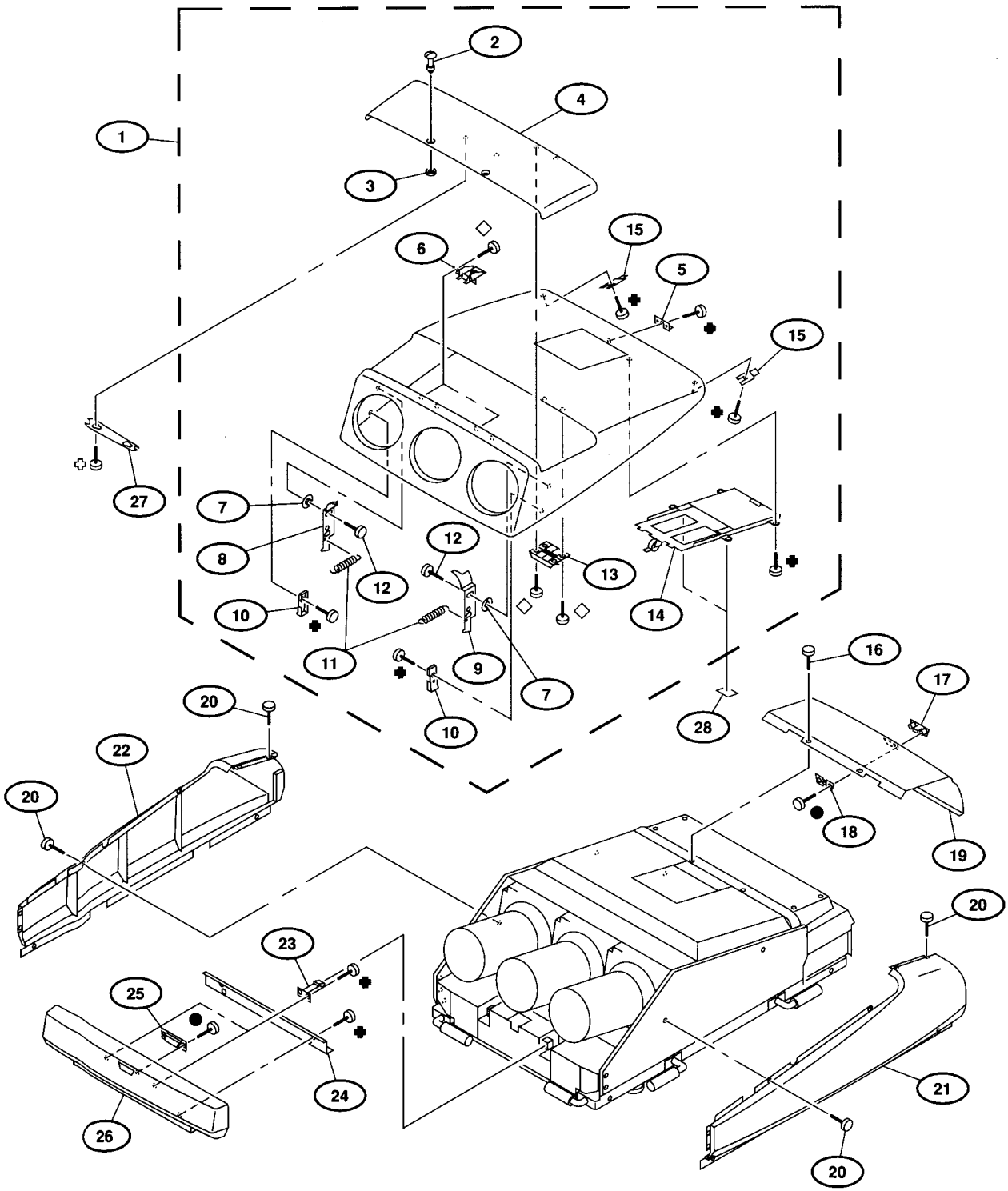

7-2. ED BLOCK

Ref.No.	Part No.	Description	Remark
51	1-418-090-11	REMOTE COMMANDER	
52	4-033-713-01	SCREW (+PWH M4X10), PREVENTION	
53	* 4-067-780-02	COVER, EC	
54	* 4-067-831-01	SPRING, EC	
55	* 4-056-414-01	BUSHING, SQUARE	
56	* X-4036-166-1	BRACKET ASSY, ED	57—62
57	* 4-067-841-01	HANDLE	
58	* 4-067-692-01	COVER (T), DC	
59	* 4-067-680-01	COVER (T), E	
60	* 4-067-788-01	LOCK, P	
61	* 4-067-787-01	STOPPER	
62	* 4-067-779-01	HINGE	
63	4-382-854-11	SCREW (M3X10), P, SW (+)	
64	* A-1346-772-A	E COMPL	
65	* 4-067-662-01	COVER (B), E	
66	* A-1346-771-A	ED COMPL	
67	* 4-067-678-01	LEVER, EC	
68	* 4-067-693-01	BRACKET, EC	
69	* A-1343-549-A	EC MOUNT	
70	1-771-559-11	SWITCH, TOGGLE	
71	1-771-560-11	SWITCH, TOGGLE	
72	* 4-067-679-02	COVER (B), EC	
73	* A-1346-773-A	DC COMPL	
74	* 4-067-690-01	COVER (B), DC	
75	* 4-068-518-01	GASKET (RS)	
76	* 4-068-519-01	GASKET (RT)	

● : 7-685-648-79 +BVTP3 × 12
■ : 7-685-659-79 +BVTP4 × 8
▲ : 7-685-646-79 +BVTP3 × 8

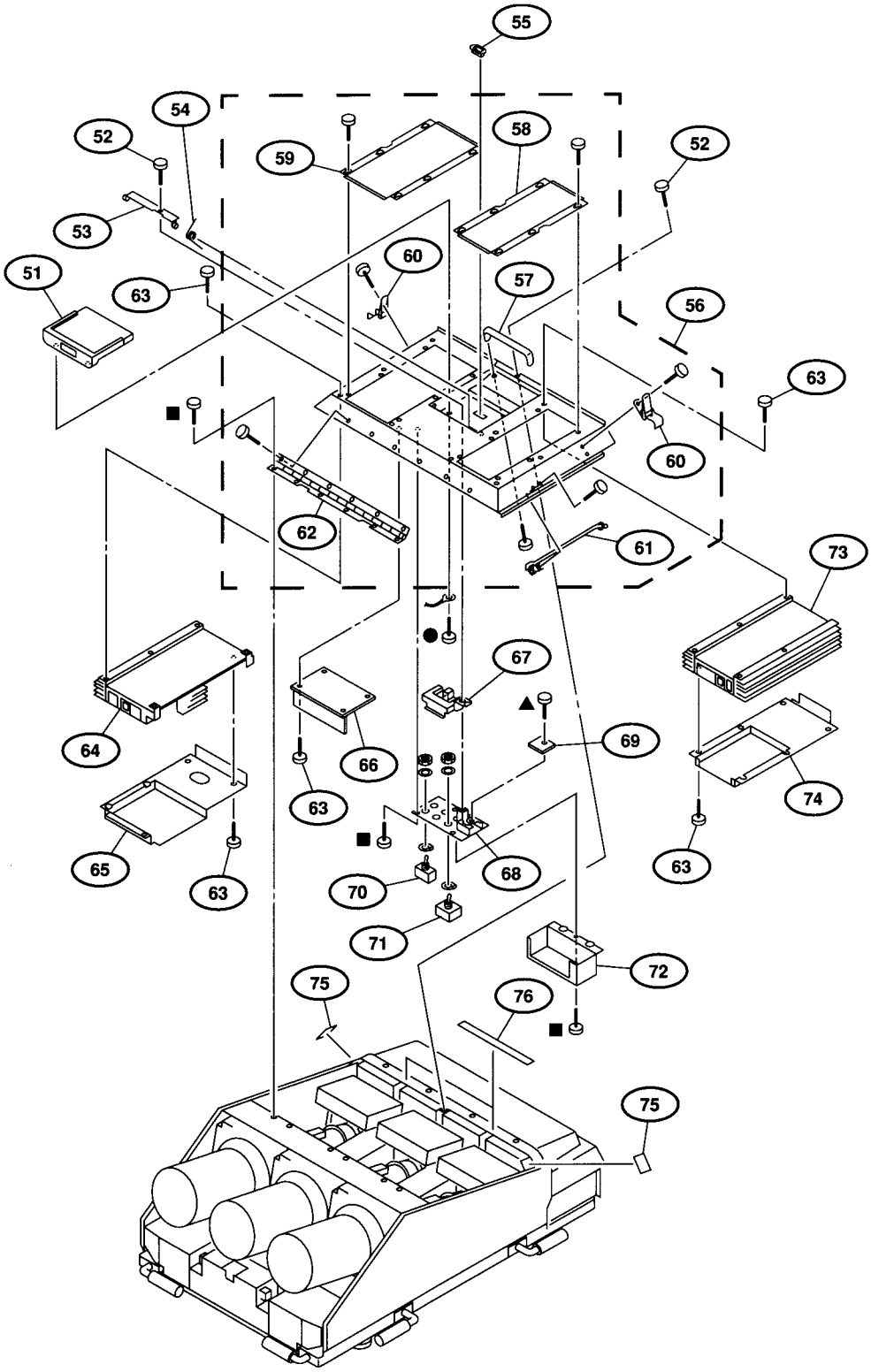

7-3. HVF BLOCK

△ : 7-682-950-01 +PSW3 × 12
■ : 7-685-659-79 +BVTP4 × 8
▲ : 7-685-646-79 +BVTP3 × 8
✱ : 7-685-768-01 +PTT4 × 30

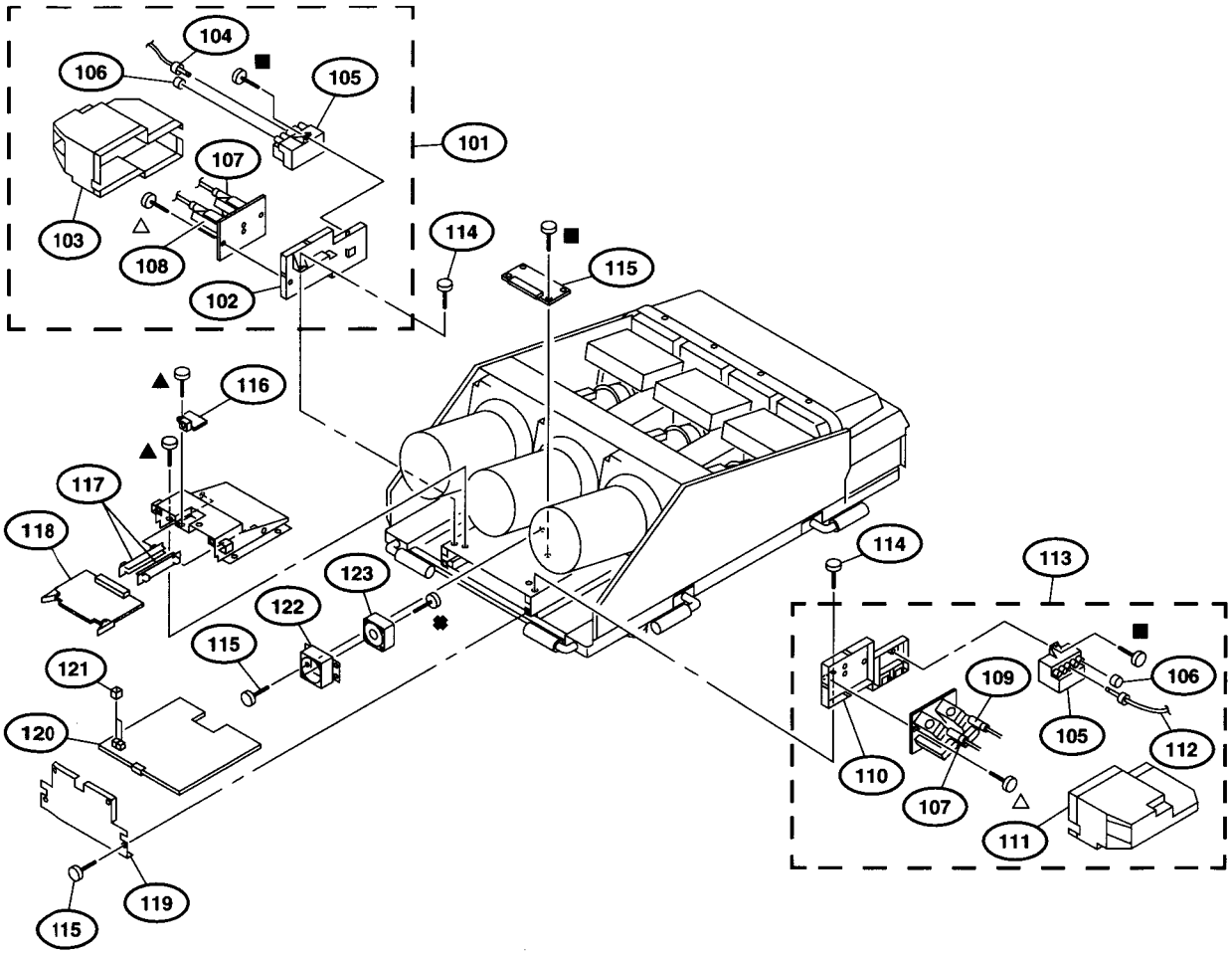

Ref.No.	Part No.	Description	Remark
101	⚠*A-1484-094-A	HVF (L) BLOCK ASSY	102—107
102	*4-067-652-01	HOLDER (L), FBT	
103	*4-067-649-01	COVER (L), FBT	
104	1-900-242-15	CONNECTOR ASSY, HV (4)	
105	⚠1-453-108-32	DC BLOCK, HIGH-VOLTAGE	
106	4-373-137-01	CAP (Z), RUBBER	
107	⚠X-4033-245-1	TRANSFORMER ASSY, FLYBACK (FBT10, FBT11) (NX3031//J1S) (L=300)	
108	⚠X-4034-326-1	TRANSFORMER ASSY, FLYBACK (L) (FBT11) (NX3031//J1W) (L=330)	
109	⚠X-4034-325-1	TRANSFORMER ASSY, FLYBACK (R) (FBT10) (NX3031//J1X) (L=270)	
110	*4-067-654-01	HOLDER (R), FBT	
111	*4-067-653-01	COVER (R), FBT	
112	1-900-242-16	CONNECTOR ASSY, HV (5)	
113	⚠*A-1484-093-A	HVF (R) BLOCK ASSY	105—110
114	4-033-713-01	SCREW (+PWH M4X10), PREVENTION	
115	*A-1304-152-A	MD MOUNT	
116	*A-1390-889-A	NB MOUNT	
117	*4-360-309-11	SUPPORT, PC BOARD	
118	*A-1195-144-A	PD COMPL	
119	*4-067-764-01	COVER (PA)	
120	*A-1195-143-A	PA COMPL	
121	4-057-640-01	COVER, VOLUME	
122	*4-067-800-02	HOLDER (PA), FAN	
123	1-763-229-11	FAN, DC	

7-4. CHASSIS BLOCK 1

☆ : 7-684-024-04 N4
✡ : 7-682-970-09 +PSW4 × 40
◆ : 7-682-962-01 +PSW4 × 10

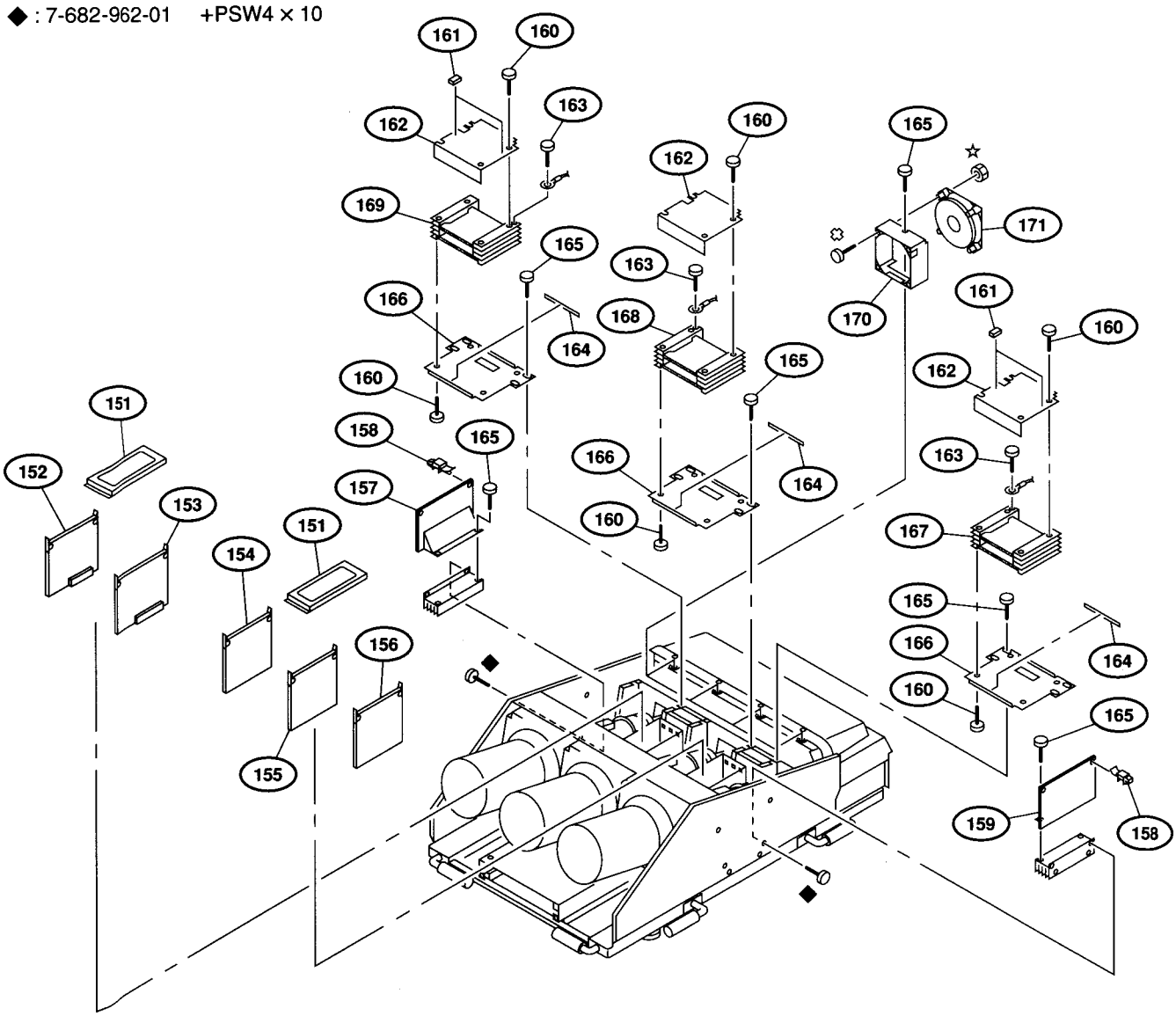

Ref.No.	Part No.	Description	Remark
151	* 4-067-710-01	COVER (D), SHIELD	
152	* A-1346-777-A	DF COMPL	
153	* A-1346-776-A	DE COMPL	
154	* A-1346-775-A	DD COMPL	
155	* A-1346-778-A	DB COMPL	
156	* A-1346-774-A	DA COMPL	
157	* A-1343-563-A	EBH MOUNT	
158	* 3-703-141-00	HOLDER, PWB	
159	* A-1343-562-A	EBQ MOUNT	
160	4-382-854-11	SCREW (M3X10), P, SW (+)	
161	* 4-067-819-01	SPACER (CED)	
162	* 4-067-705-01	SHIELD (TP), C	
163	3-701-809-31	SCREW, TERMINAL (M3X3)	
164	* 4-068-520-01	GASKET (C)	
165	4-033-713-01	SCREW (+PWH M4X10), PREVENTION	
166	* 4-067-706-01	HOLDER (C)	
167	* A-1335-105-A	CR COMPL	
168	* A-1335-106-A	CG COMPL	
169	* A-1335-107-A	CB COMPL	
170	* 4-067-691-02	HOLDER, FAN	
171	1-763-199-11	FAN, DC	

7-5. REAR BLOCK

Ref.No.	Part No.	Description	Remark
201	* A-1195-142-A	PE COMPL	
202	* 3-701-903-11	HOLDER, PC BOARD	
203	* 3-703-141-00	HOLDER, PWB	
204	* A-1346-781-A	EBB COMPL	
205	* A-1346-780-A	EBG COMPL	
206	* A-1346-779-A	EBR COMPL	
207	* A-1316-410-A	GA COMPL	208
208	* A-1311-704-A	GAA MOUNT	
209	* A-1316-411-A	GB COMPL	210—212
210	* A-1311-707-A	GBB MOUNT	
211	* A-1311-687-A	GC MOUNT	
212	* A-1311-706-A	GBA MOUNT	
213	* A-1390-888-A	NA MOUNT	
214	* 4-067-709-01	COVER (EB)	
215	3-701-810-91	SCREW, TERMINAL	
216	4-382-854-11	SCREW (M3X10), P, SW (+)	
217	* 4-067-714-01	COVER (G)	
218	⚠1-251-263-11	INLET, AC	
219	⚠1-771-602-11	SWITCH, AC POWER	
220	* 4-067-726-01	PANEL (F), REAR	
221	* A-1245-597-A	F COMPL (G90E/G90M)	222,223
221	* A-1245-598-A	F COMPL (G90U)	222,223
222	⚠1-533-576-11	FUSE, TIME-LAG ((UL)ET) (G90E/G90M)	
222	⚠1-533-694-11	FUSE, GLASS ((UL)ET) (10A/250V) (G90U)	
223	1-533-702-11	HOLDER, FUSE (G90E/G90M)	
223	* 1-533-703-11	HOLDER, FUSE (G90U)	
224	* A-1304-153-A	ME MOUNT	
225	* 4-067-814-01	PANEL (BC), REAR	
226	4-396-203-01	SCREW (+B M3X12), PREVENTION	
227	4-035-771-01	PLATE, BLIND	
228	4-353-708-00	HOOK, FINGER	
229	* A-1131-355-A	BC MOUNT	
230	* A-1135-958-A	BB COMPL	
231	* A-1135-957-B	BA COMPL	
232	* A-1394-911-A	YA COMPL	
233	* 4-067-638-01	PANEL (BY), REAR (G90E)	
233	* 4-067-638-11	PANEL (BY), REAR (G90M/G90U)	
234	4-067-813-01	SCREW (P), SPECIAL	
235	3-728-267-01	COVER, 3.5 JACK	
236	* 4-067-810-01	WINDOW, INDICATE	
237	* A-1131-365-A	BD MOUNT (G90M/G90U)	
238	* 4-316-015-00	HOLDER, WIRE	

○ : 7-682-949-01 +PSW3 × 10
▽ : 7-682-248-09 +K3 × 8
□ : 7-682-961-01 +PSW4 × 8
▲ : 7-685-646-79 +BVTP3 × 8
▼ : 7-685-246-19 +KTP3 × 8
◆ : 7-682-962-01 +PSW4 × 10
★ : 7-682-903-19 +PWH3 × 6

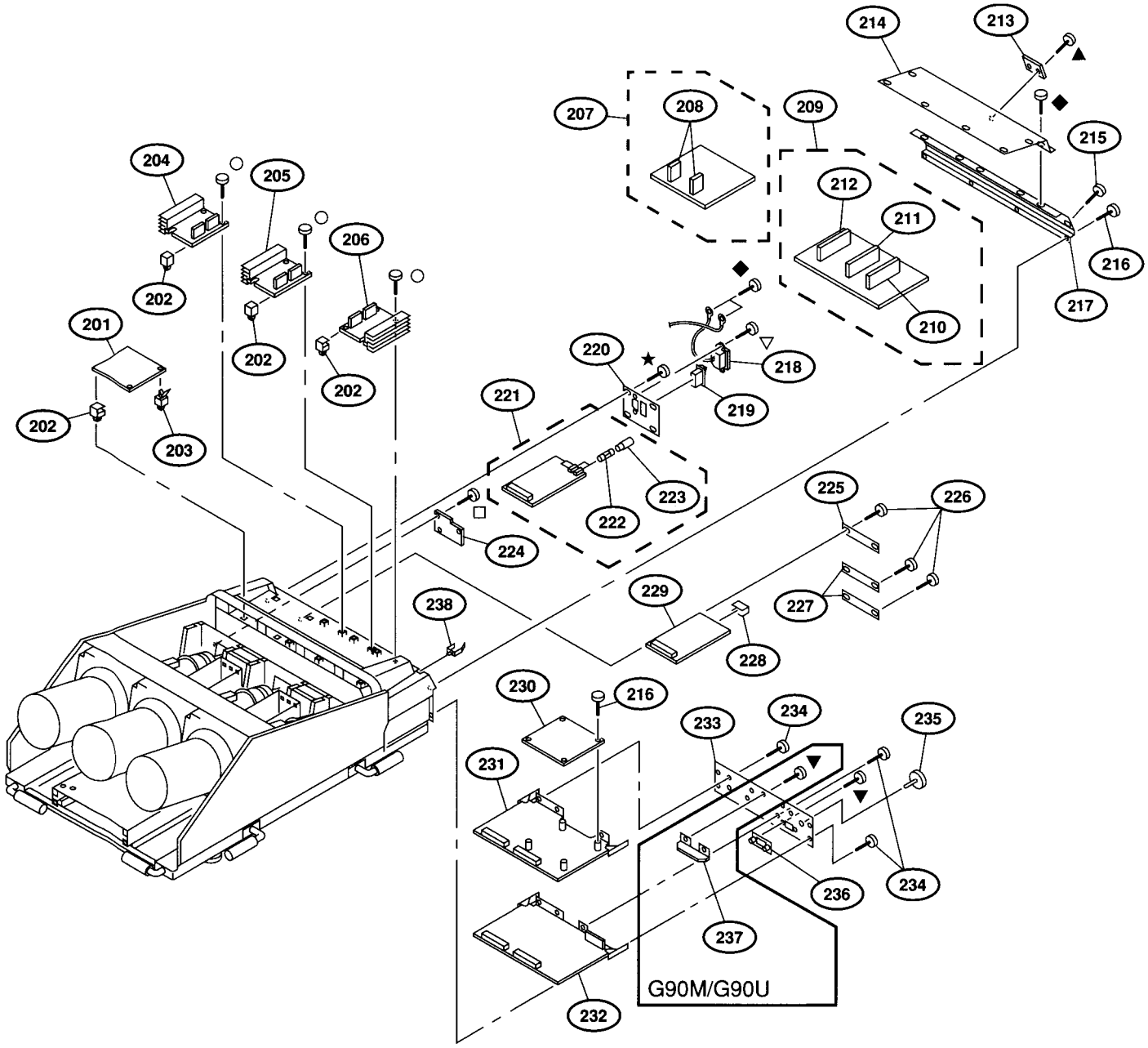

7-6. PICTURE TUBE BLOCK

Ref.No.	Part No.	Description	Remark
251	⚠4-049-735-61	LENS (HD-10)	
252	⚠A-1501-413-A	COUPLING (B) ASSY, CRT (V903)	
253	⚠A-1501-412-A	COUPLING (G) ASSY, CRT (V902)	
254	⚠A-1501-411-A	COUPLING (R) ASSY, CRT (V901)	
255	4-067-704-02	SPACER (DY)	
256	⚠1-451-478-11	DEFLECTION YOKE	
257	4-050-317-01	WEDGE	
258	1-452-964-11	MAGNET, FOCUS	
259	1-416-876-11	COIL, 2-4 P	
260	* A-1331-860-A	CBB MOUNT	
261	* A-1331-859-A	CBG MOUNT	
262	* A-1331-858-A	CBR MOUNT	
263	* 4-067-769-11	STAY (CRT)	
264	* 4-067-769-21	STAY (CRT)	
265	* 4-067-769-01	STAY (CRT)	
266	4-056-110-11	SCREW, SW HEXAGON HEAD M5X12	
267	⚠A-1484-095-A	HVB BLOCK ASSY	
268	* 4-067-702-01	HOLDER (HVR)	
269	3-701-474-02	LOCK, PURSE	

□ : 7-682-961-01 +PSW4 × 8
◇ : 7-682-663-09 +PSW4 × 12
■ : 7-685-659-79 +BVTP4 × 8
◆ : 7-682-962-01 +PSW4 × 10
▲ : 7-685-646-79 +BVTP3 × 8

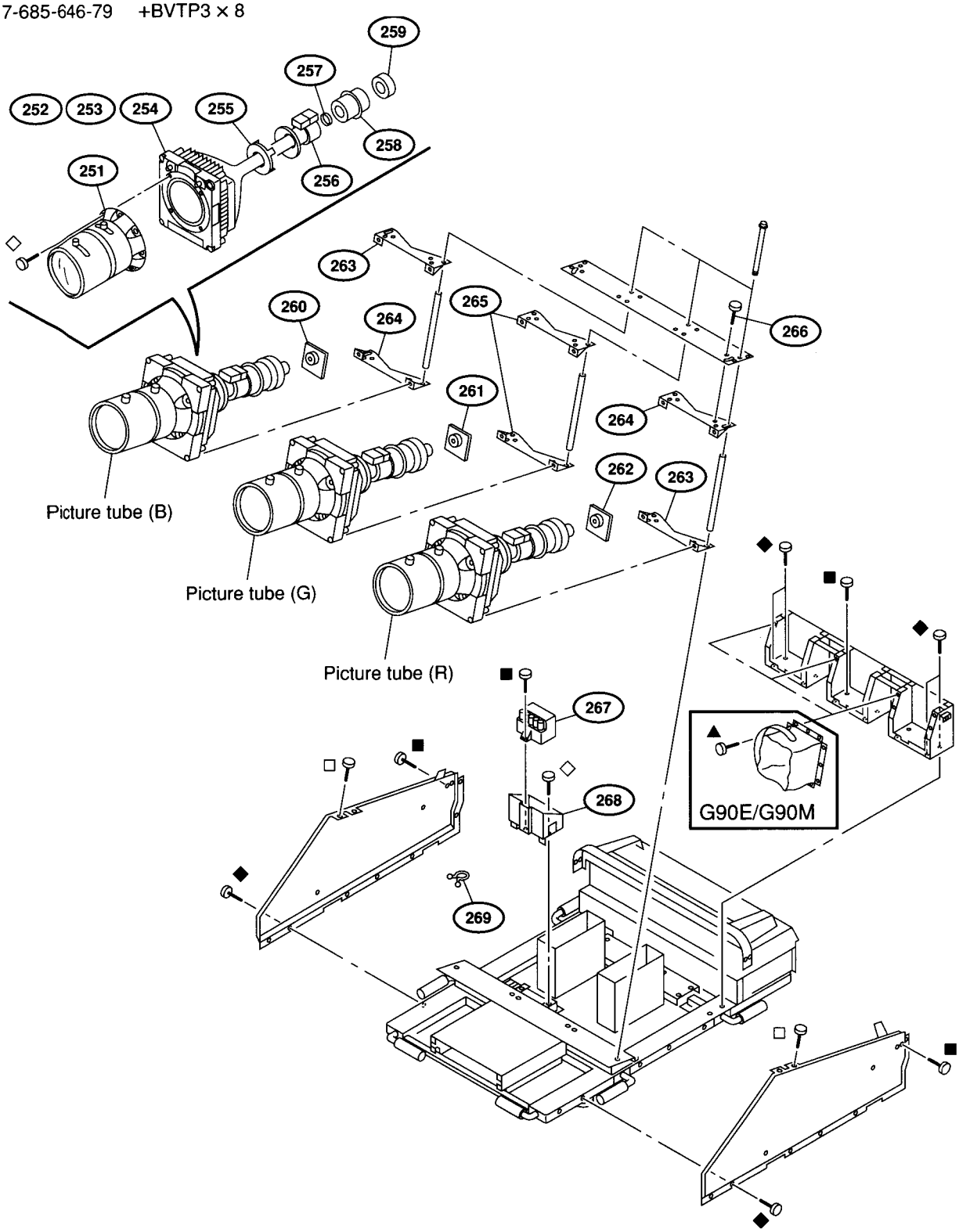

7-7. CHASSIS BLOCK 2

◆ : 7-682-962-01 +PSW4 × 10
■ : 7-685-659-79 +BVTP4 × 8

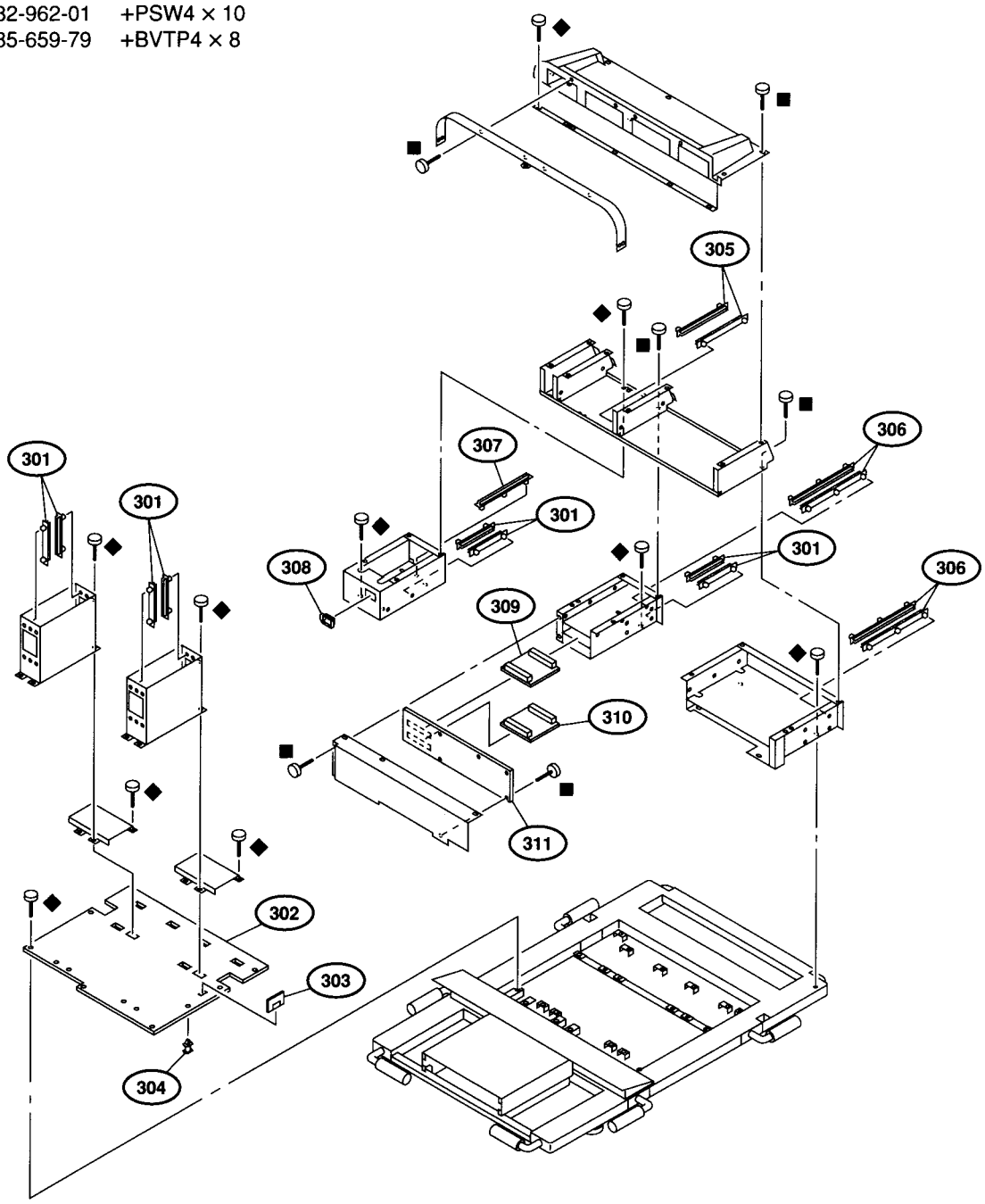

Ref.No.	Part No.	Description	Remark
301	*4-360-309-11	SUPPORT, PC BOARD	
302	*A-1304-148-A	M MOUNT	
303	*A-1390-887-A	L MOUNT	
304	*4-958-674-31	SPACER, MINIATURE CARD	
305	4-055-970-11	RAIL (S), PC BOARD GUIDE	
306	4-055-970-21	RAIL (S), PC BOARD GUIDE	
307	4-056-020-01	RAIL, PA	
308	*4-056-414-01	BUSHING, SQUARE	
309	*A-1304-150-A	MB MOUNT	
310	*A-1304-151-A	MC MOUNT	
311	*A-1304-149-A	MA MOUNT	

7-8. BASE BLOCK

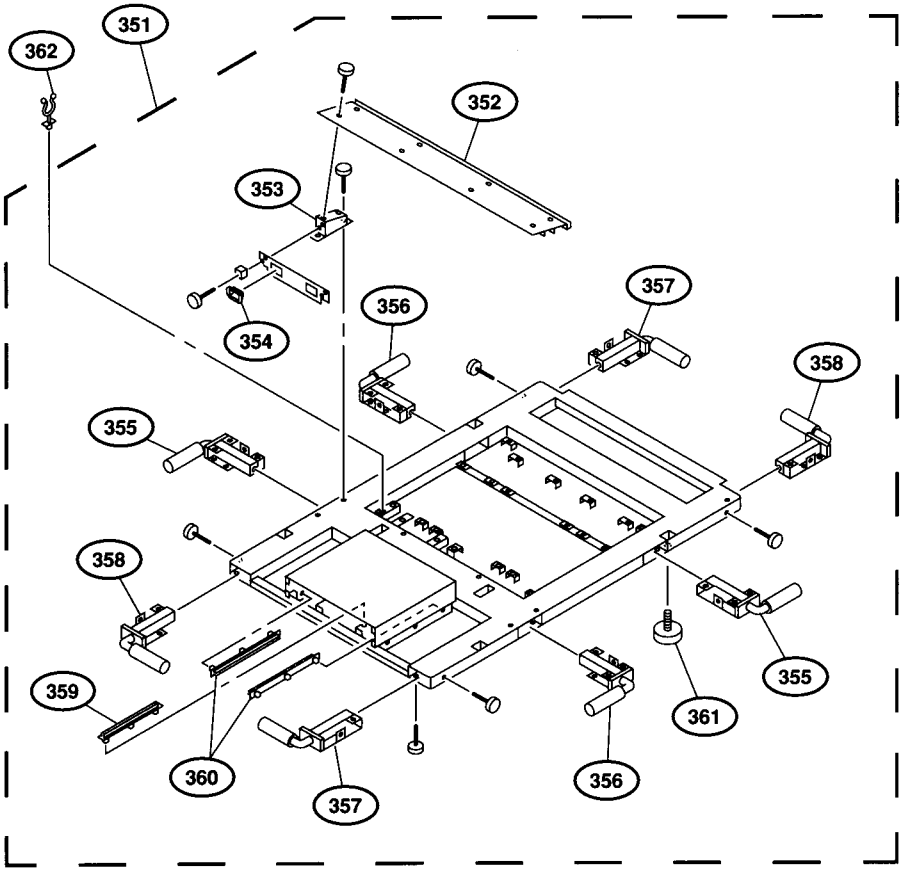

Ref.No.	Part No.	Description	Remark	Ref.No.	Part No.	Description	Remark
351	* X-4036-167-2	BASE ASSY	352—361	357	* 4-067-684-02	HANDLE (R)	
352	* 4-067-646-01	BRACKET (BT), CRT		358	* 4-067-685-02	HANDLE (L)	
353	* 4-067-763-01	BRACKET (PS), CRT		359	4-056-020-01	RAIL, PA	
354	* 4-056-414-01	BUSHING, SQUARE		360	4-055-970-21	RAIL (S), PC BOARD GUIDE	
355	* 4-067-686-01	HANDLE (MR)		361	* 4-067-785-01	ADJUSTOR (M12)	
356	* 4-067-687-01	HANDLE (ML)		362	3-703-319-01	PURSE LOCK (DIA.15)	

SECTION 8
ELECTRICAL PARTS LIST

NOTE:

The components identified by mark ⚠ are critical for safety. Replace only with part number specified.

Les composants identifies par une marque ⚠ sont critiques pour la securite. Ne les remplacer que par une piece portant le numero specifie.

- Items marked "*" are not stocked since they are seldom required for routine service. Some delay should be anticipated when ordering these items.
- All variable and adjustable resistors have characteristic curve B, unless otherwise noted.

RESISTORS
- All resistors are in ohms
- F: nonflammable

When indicating parts by reference number, please include the board name.

- CAPACITORS
  PF: μμ F
- There are some cases the reference number on one board overlaps on the other board. Therefore, when ordering parts by the reference number, please include the board name.
- The components identified by ⧗ in this manual have been carefully factory-selected for each set in order to satisfy regulations regarding X-ray radiation.
  Should replacement be required, replace only with the value originally used.

BC BD BA

Ref.No.	Part No.	Description				Remark
	* A-1131-355-A	BC MOUNTED PC BOARD				
		**********				
		<CAPACITOR>				
C500	1-126-791-11	ELECT	10μF	20%	16V	
C501	1-126-791-11	ELECT	10μF	20%	16V	
C502	1-126-786-11	ELECT	47μF	20%	16V	
C503	1-164-004-11	CERAMIC CHIP	0.1μF	10%	25V	
C505	1-164-004-11	CERAMIC CHIP	0.1μF	10%	25V	
C507	1-126-786-11	ELECT	47μF	20%	16V	
C512	1-126-791-11	ELECT	10μF	20%	16V	
C513	1-126-791-11	ELECT	10μF	20%	16V	
		<CONNECTOR>				
CN380	* 1-778-891-11	CONNECTOR, BOARD TO BOARD				
		<DIODE>				
D500	8-719-801-78	DIODE 1SS184				
D501	8-719-801-78	DIODE 1SS184				
D502	8-719-801-78	DIODE 1SS184				
D503	8-719-801-78	DIODE 1SS184				
D504	8-719-801-78	DIODE 1SS184				
		<IC>				
IC500	8-759-242-64	IC TC4W53F				
IC501	8-759-157-17	IC PQ05SZ1U				
		<COIL>				
L500	1-412-533-21	INDUCTOR 47μH				
L501	1-412-533-21	INDUCTOR 47μH				
		<TRANSISTOR>				
Q500	8-729-230-49	TRANSISTOR 2SC2712-YG				
Q501	8-729-230-49	TRANSISTOR 2SC2712-YG				
Q502	8-729-230-49	TRANSISTOR 2SC2712-YG				
Q503	8-729-140-75	TRANSISTOR 2SD999-CLCK				
Q504	8-729-230-49	TRANSISTOR 2SC2712-YG				
Q505	8-729-140-75	TRANSISTOR 2SD999-CLCK				
Q506	8-729-230-49	TRANSISTOR 2SC2712-YG				
Q507	8-729-230-49	TRANSISTOR 2SC2712-YG				
Q508	8-729-900-53	TRANSISTOR DTC114EK				
		<RESISTOR>				
R500	1-216-041-00	RES,CHIP	470	5%	1/10W	
R501	1-216-041-00	RES,CHIP	470	5%	1/10W	
R502	1-216-041-00	RES,CHIP	470	5%	1/10W	
R503	1-216-065-91	RES,CHIP	4.7K	5%	1/10W	
R504	1-216-065-91	RES,CHIP	4.7K	5%	1/10W	
R505	1-216-065-91	RES,CHIP	4.7K	5%	1/10W	
R506	1-216-065-91	RES,CHIP	4.7K	5%	1/10W	
R507	1-216-041-00	RES,CHIP	470	5%	1/10W	
R508	1-216-025-91	RES,CHIP	100	5%	1/10W	
R509	1-216-025-91	RES,CHIP	100	5%	1/10W	
R510	1-216-025-91	RES,CHIP	100	5%	1/10W	
R511	1-216-065-91	RES,CHIP	4.7K	5%	1/10W	
		<RELAY>				
RY500	1-515-716-11	RELAY (TQ2-5V)				
RY501	1-515-716-11	RELAY (TQ2-5V)				
RY502	1-515-716-11	RELAY (TQ2-5V)				
RY503	1-515-716-11	RELAY (TQ2-5V)				
RY504	1-515-716-11	RELAY (TQ2-5V)				
RY505	1-515-716-11	RELAY (TQ2-5V)				
RY506	1-515-716-11	RELAY (TQ2-5V)				
RY507	1-515-716-11	RELAY (TQ2-5V)				

****

	* A-1131-365-A	BD MOUNTED PC BOARD (G90M/G90U)				
		**********				
		<CONNECTOR>				
CN400	* 1-564-510-11	PLUG, CONNECTOR 7P				
		<DIODE>				
D101	8-719-110-17	DIODE RD10ESB2				
D102	8-719-110-17	DIODE RD10ESB2				
D103	8-719-110-17	DIODE RD10ESB2				
		<JACK>				
J101	1-566-981-21	CONNECTOR, ROUND TYPE 4P				
J102	1-566-980-31	CONNECTOR, ROUND TYPE 4P				
		<RESISTOR>				
R101	1-215-394-00	METAL	75	1%	1/4W	
R102	1-215-394-00	METAL	75	1%	1/4W	
R103	1-215-394-00	METAL	75	1%	1/4W	
		<TERMINAL BOARD>				
TB101	* 1-694-488-11	TERMINAL BOARD, I/O				
TB102	* 1-694-487-11	TERMINAL BOARD, I/O				

****

	* A-1135-957-B	BA COMPLETE PC BOARD				
		**********				
	2-280-622-71	SUPPORT (M3), HEXAGON				
	* 4-057-871-01	HOLDER, HEAT SINK (BB)				
	4-057-872-01	HEAT SINK (BB)				
	* 4-067-738-01	SHIELD (TP), BA				
	4-382-854-11	SCREW (M3X10), P, SW (+)				
	4-382-854-11	SCREW (M3X10), P, SW (+)				

Ref.No.	Part No.	Description	Remark
	<CAPACITOR>		
C1	1-164-004-11	CERAMIC CHIP 0.1μF 10%	25V
C2	1-128-004-11	ELECT CHIP 10μF 20%	16V
C3	1-164-004-11	CERAMIC CHIP 0.1μF 10%	25V
C4	1-128-453-21	ELECT CHIP 47μF 20%	6.3V
C5	1-128-453-21	ELECT CHIP 47μF 20%	6.3V
C6	1-164-004-11	CERAMIC CHIP 0.1μF 10%	25V
C7	1-128-453-21	ELECT CHIP 47μF 20%	6.3V
C8	1-128-453-21	ELECT CHIP 47μF 20%	6.3V
C9	1-164-004-11	CERAMIC CHIP 0.1μF 10%	25V
C10	1-128-453-21	ELECT CHIP 47μF 20%	6.3V
C11	1-164-004-11	CERAMIC CHIP 0.1μF 10%	25V
C12	1-164-004-11	CERAMIC CHIP 0.1μF 10%	25V
C13	1-128-453-21	ELECT CHIP 47μF 20%	6.3V
C14	1-164-004-11	CERAMIC CHIP 0.1μF 10%	25V
C15	1-128-004-11	ELECT CHIP 10μF 20%	16V
C16	1-128-004-11	ELECT CHIP 10μF 20%	16V
C17	1-128-004-11	ELECT CHIP 10μF 20%	16V
C18	1-164-004-11	CERAMIC CHIP 0.1μF 10%	25V
C19	1-109-982-11	CERAMIC CHIP 1μF 10%	10V
C20	1-128-004-11	ELECT CHIP 10μF 20%	16V
C23	1-128-004-11	ELECT CHIP 10μF 20%	16V
C24	1-128-004-11	ELECT CHIP 10μF 20%	16V
C25	1-126-397-11	ELECT CHIP 33μF 20%	25V
C26	1-126-394-11	ELECT CHIP 10μF 20%	16V
C27	1-164-004-11	CERAMIC CHIP 0.1μF 10%	25V
C28	1-128-004-11	ELECT CHIP 10μF 20%	16V
C29	1-164-004-11	CERAMIC CHIP 0.1μF 10%	25V
C30	1-164-004-11	CERAMIC CHIP 0.1μF 10%	25V
C31	1-164-004-11	CERAMIC CHIP 0.1μF 10%	25V
C32	1-128-004-11	ELECT CHIP 10μF 20%	16V
C33	1-163-217-11	CERAMIC CHIP 1PF 0.25PF	50V
C34	1-109-982-11	CERAMIC CHIP 1μF 10%	10V
C37	1-126-397-11	ELECT CHIP 33μF 20%	25V
C38	1-164-004-11	CERAMIC CHIP 0.1μF 10%	25V
C40	1-164-004-11	CERAMIC CHIP 0.1μF 10%	25V
C41	1-163-217-11	CERAMIC CHIP 1PF 0.25PF	50V
C42	1-164-004-11	CERAMIC CHIP 0.1μF 10%	25V
C43	1-164-004-11	CERAMIC CHIP 0.1μF 10%	25V
C44	1-163-021-91	CERAMIC CHIP 0.01μF 10%	50V
C47	1-164-004-11	CERAMIC CHIP 0.1μF 10%	25V
C48	1-164-004-11	CERAMIC CHIP 0.1μF 10%	25V
C49	1-128-004-11	ELECT CHIP 10μF 20%	16V
C50	1-163-217-11	CERAMIC CHIP 1PF 0.25PF	50V
C51	1-164-004-11	CERAMIC CHIP 0.1μF 10%	25V
C52	1-163-245-11	CERAMIC CHIP 56PF 5%	50V
C53	1-164-004-11	CERAMIC CHIP 0.1μF 10%	25V
C54	1-128-004-11	ELECT CHIP 10μF 20%	16V
C55	1-128-013-11	ELECT CHIP 1μF 20%	50V
C56	1-128-004-11	ELECT CHIP 10μF 20%	16V
C57	1-164-004-11	CERAMIC CHIP 0.1μF 10%	25V
C58	1-164-004-11	CERAMIC CHIP 0.1μF 10%	25V
C59	1-164-004-11	CERAMIC CHIP 0.1μF 10%	25V
C200	1-164-004-11	CERAMIC CHIP 0.1μF 10%	25V
C201	1-164-004-11	CERAMIC CHIP 0.1μF 10%	25V
C202	1-128-004-11	ELECT CHIP 10μF 20%	16V
C203	1-128-004-11	ELECT CHIP 10μF 20%	16V
C204	1-164-004-11	CERAMIC CHIP 0.1μF 10%	25V
C205	1-164-004-11	CERAMIC CHIP 0.1μF 10%	25V
C206	1-163-021-91	CERAMIC CHIP 0.01μF 10%	50V
C207	1-128-004-11	ELECT CHIP 10μF 20%	16V
C208	1-164-004-11	CERAMIC CHIP 0.1μF 10%	25V
C209	1-164-004-11	CERAMIC CHIP 0.1μF 10%	25V
C210	1-126-603-11	ELECT CHIP 4.7μF 20%	16V
C211	1-164-004-11	CERAMIC CHIP 0.1μF 10%	25V
C212	1-164-004-11	CERAMIC CHIP 0.1μF 10%	25V
C213	1-164-004-11	CERAMIC CHIP 0.1μF 10%	25V
C214	1-164-004-11	CERAMIC CHIP 0.1μF 10%	25V
C215	1-110-666-11	ELECT CHIP 22μF 20%	6.3V
C216	1-164-004-11	CERAMIC CHIP 0.1μF 10%	25V
C218	1-164-004-11	CERAMIC CHIP 0.1μF 10%	25V
C219	1-109-982-11	CERAMIC CHIP 1μF 10%	10V
C220	1-109-982-11	CERAMIC CHIP 1μF 10%	10V
C221	1-164-004-11	CERAMIC CHIP 0.1μF 10%	25V
C222	1-164-004-11	CERAMIC CHIP 0.1μF 10%	25V
C223	1-128-004-11	ELECT CHIP 10μF 20%	16V
C224	1-164-004-11	CERAMIC CHIP 0.1μF 10%	25V
C225	1-128-004-11	ELECT CHIP 10μF 20%	16V
C226	1-163-021-91	CERAMIC CHIP 0.01μF 10%	50V
C227	1-164-004-11	CERAMIC CHIP 0.1μF 10%	25V
C228	1-128-004-11	ELECT CHIP 10μF 20%	16V
C229	1-164-004-11	CERAMIC CHIP 0.1μF 10%	25V
C230	1-163-021-91	CERAMIC CHIP 0.01μF 10%	50V
C231	1-164-004-11	CERAMIC CHIP 0.1μF 10%	25V
C232	1-164-004-11	CERAMIC CHIP 0.1μF 10%	25V
C233	1-126-603-11	ELECT CHIP 4.7μF 20%	16V
C234	1-164-004-11	CERAMIC CHIP 0.1μF 10%	25V
C235	1-164-004-11	CERAMIC CHIP 0.1μF 10%	25V
C236	1-110-666-11	ELECT CHIP 22μF 20%	6.3V
C237	1-164-004-11	CERAMIC CHIP 0.1μF 10%	25V
C238	1-164-004-11	CERAMIC CHIP 0.1μF 10%	25V
C239	1-164-004-11	CERAMIC CHIP 0.1μF 10%	25V
C241	1-164-004-11	CERAMIC CHIP 0.1μF 10%	25V
C242	1-164-004-11	CERAMIC CHIP 0.1μF 10%	25V
C243	1-109-982-11	CERAMIC CHIP 1μF 10%	10V
C244	1-128-004-11	ELECT CHIP 10μF 20%	16V
C245	1-109-982-11	CERAMIC CHIP 1μF 10%	10V
C246	1-164-004-11	CERAMIC CHIP 0.1μF 10%	25V
C247	1-164-004-11	CERAMIC CHIP 0.1μF 10%	25V
C248	1-164-004-11	CERAMIC CHIP 0.1μF 10%	25V
C249	1-128-004-11	ELECT CHIP 10μF 20%	16V
C250	1-163-021-91	CERAMIC CHIP 0.01μF 10%	50V
C251	1-128-004-11	ELECT CHIP 10μF 20%	16V
C252	1-164-004-11	CERAMIC CHIP 0.1μF 10%	25V
C253	1-164-004-11	CERAMIC CHIP 0.1μF 10%	25V
C254	1-164-004-11	CERAMIC CHIP 0.1μF 10%	25V
C255	1-126-603-11	ELECT CHIP 4.7μF 20%	16V
C256	1-128-004-11	ELECT CHIP 10μF 20%	16V
C257	1-164-004-11	CERAMIC CHIP 0.1μF 10%	25V
C258	1-164-004-11	CERAMIC CHIP 0.1μF 10%	25V
C259	1-110-666-11	ELECT CHIP 22μF 20%	6.3V
C260	1-163-021-91	CERAMIC CHIP 0.01μF 10%	50V
C261	1-164-004-11	CERAMIC CHIP 0.1μF 10%	25V
C262	1-128-004-11	ELECT CHIP 10μF 20%	16V
C263	1-164-004-11	CERAMIC CHIP 0.1μF 10%	25V
C264	1-164-004-11	CERAMIC CHIP 0.1μF 10%	25V

BA

Ref.No.	Part No.	Description	Remark
C265	1-128-004-11	ELECT CHIP 10μF	20% 16V
C266	1-109-982-11	CERAMIC CHIP 1μF	10% 10V
C267	1-128-004-11	ELECT CHIP 10μF	20% 16V
C269	1-109-982-11	CERAMIC CHIP 1μF	10% 10V
C270	1-164-004-11	CERAMIC CHIP 0.1μF	10% 25V
C271	1-164-004-11	CERAMIC CHIP 0.1μF	10% 25V
C272	1-128-004-11	ELECT CHIP 10μF	20% 16V
C273	1-163-021-91	CERAMIC CHIP 0.01μF	10% 50V
C274	1-164-004-11	CERAMIC CHIP 0.1μF	10% 25V
C275	1-164-004-11	CERAMIC CHIP 0.1μF	10% 25V
C276	1-164-004-11	CERAMIC CHIP 0.1μF	10% 25V
C277	1-164-004-11	CERAMIC CHIP 0.1μF	10% 25V
C278	1-164-004-11	CERAMIC CHIP 0.1μF	10% 25V
C279	1-128-004-11	ELECT CHIP 10μF	20% 16V
C280	1-164-004-11	CERAMIC CHIP 0.1μF	10% 25V
C282	1-164-489-11	CERAMIC CHIP 0.22μF	10% 16V
C284	1-164-489-11	CERAMIC CHIP 0.22μF	10% 16V
C286	1-164-489-11	CERAMIC CHIP 0.22μF	10% 16V
C401	1-164-489-11	CERAMIC CHIP 0.22μF	10% 16V
C402	1-164-004-11	CERAMIC CHIP 0.1μF	10% 25V
C403	1-164-489-11	CERAMIC CHIP 0.22μF	10% 16V
C404	1-164-004-11	CERAMIC CHIP 0.1μF	10% 25V
C405	1-164-489-11	CERAMIC CHIP 0.22μF	10% 16V
C406	1-164-004-11	CERAMIC CHIP 0.1μF	10% 25V
C407	1-164-004-11	CERAMIC CHIP 0.1μF	10% 25V
C408	1-164-004-11	CERAMIC CHIP 0.1μF	10% 25V
C409	1-164-004-11	CERAMIC CHIP 0.1μF	10% 25V
C410	1-164-004-11	CERAMIC CHIP 0.1μF	10% 25V
C411	1-126-394-11	ELECT CHIP 10μF	20% 16V
C412	1-126-204-11	ELECT CHIP 47μF	20% 16V
C413	1-163-021-91	CERAMIC CHIP 0.01μF	10% 50V
C414	1-126-204-11	ELECT CHIP 47μF	20% 16V
C415	1-163-021-91	CERAMIC CHIP 0.01μF	10% 50V
C416	1-126-204-11	ELECT CHIP 47μF	20% 16V
C417	1-163-021-91	CERAMIC CHIP 0.01μF	10% 50V
C418	1-164-004-11	CERAMIC CHIP 0.1μF	10% 25V
C419	1-164-004-11	CERAMIC CHIP 0.1μF	10% 25V
C420	1-164-004-11	CERAMIC CHIP 0.1μF	10% 25V
C421	1-164-004-11	CERAMIC CHIP 0.1μF	10% 25V
C422	1-164-004-11	CERAMIC CHIP 0.1μF	10% 25V
C423	1-164-004-11	CERAMIC CHIP 0.1μF	10% 25V
C424	1-164-004-11	CERAMIC CHIP 0.1μF	10% 25V
C425	1-164-004-11	CERAMIC CHIP 0.1μF	10% 25V
C426	1-164-004-11	CERAMIC CHIP 0.1μF	10% 25V
C427	1-164-004-11	CERAMIC CHIP 0.1μF	10% 25V
C428	1-163-220-11	CERAMIC CHIP 3PF	0.25PF50V
C429	1-163-220-11	CERAMIC CHIP 3PF	0.25PF50V
C430	1-163-220-11	CERAMIC CHIP 3PF	0.25PF50V
C431	1-164-004-11	CERAMIC CHIP 0.1μF	10% 25V
C432	1-164-004-11	CERAMIC CHIP 0.1μF	10% 25V
C434	1-115-857-11	ELECT 0.001F	20% 16V
C435	1-164-004-11	CERAMIC CHIP 0.1μF	10% 25V
C436	1-164-004-11	CERAMIC CHIP 0.1μF	10% 25V
C437	1-164-004-11	CERAMIC CHIP 0.1μF	10% 25V
C455	1-124-779-00	ELECT CHIP 10μF	20% 16V
C459	1-124-779-00	ELECT CHIP 10μF	20% 16V
C460	1-164-004-11	CERAMIC CHIP 0.1μF	10% 25V
C461	1-164-004-11	CERAMIC CHIP 0.1μF	10% 25V
C463	1-164-004-11	CERAMIC CHIP 0.1μF	10% 25V
C464	1-164-004-11	CERAMIC CHIP 0.1μF	10% 25V
C465	1-164-004-11	CERAMIC CHIP 0.1μF	10% 25V
C466	1-115-857-11	ELECT 0.001F	20% 16V
C467	1-115-857-11	ELECT 0.001F	20% 16V
C470	1-164-004-11	CERAMIC CHIP 0.1μF	10% 25V
C471	1-163-082-00	CERAMIC CHIP 0.5PF	0.25PF50V
C505	1-124-779-00	ELECT CHIP 10μF	20% 16V
C509	1-124-779-00	ELECT CHIP 10μF	20% 16V
C510	1-164-004-11	CERAMIC CHIP 0.1μF	10% 25V
C511	1-164-004-11	CERAMIC CHIP 0.1μF	10% 25V
C513	1-164-004-11	CERAMIC CHIP 0.1μF	10% 25V
C514	1-164-004-11	CERAMIC CHIP 0.1μF	10% 25V
C515	1-164-004-11	CERAMIC CHIP 0.1μF	10% 25V
C516	1-164-004-11	CERAMIC CHIP 0.1μF	10% 25V
C517	1-164-004-11	CERAMIC CHIP 0.1μF	10% 25V
C518	1-164-004-11	CERAMIC CHIP 0.1μF	10% 25V
C519	1-164-004-11	CERAMIC CHIP 0.1μF	10% 25V
C520	1-164-004-11	CERAMIC CHIP 0.1μF	10% 25V
C521	1-163-082-00	CERAMIC CHIP 0.5PF	0.25PF50V
C555	1-124-779-00	ELECT CHIP 10μF	20% 16V
C559	1-124-779-00	ELECT CHIP 10μF	20% 16V
C560	1-164-004-11	CERAMIC CHIP 0.1μF	10% 25V
C561	1-164-004-11	CERAMIC CHIP 0.1μF	10% 25V
C563	1-164-004-11	CERAMIC CHIP 0.1μF	10% 25V
C564	1-164-004-11	CERAMIC CHIP 0.1μF	10% 25V
C565	1-164-004-11	CERAMIC CHIP 0.1μF	10% 25V
C570	1-164-004-11	CERAMIC CHIP 0.1μF	10% 25V
C571	1-163-082-00	CERAMIC CHIP 0.5PF	0.25PF50V
C600	1-164-004-11	CERAMIC CHIP 0.1μF	10% 25V
C601	1-164-004-11	CERAMIC CHIP 0.1μF	10% 25V
C602	1-164-004-11	CERAMIC CHIP 0.1μF	10% 25V
C603	1-164-004-11	CERAMIC CHIP 0.1μF	10% 25V
C604	1-164-004-11	CERAMIC CHIP 0.1μF	10% 25V
C605	1-164-004-11	CERAMIC CHIP 0.1μF	10% 25V
C607	1-164-004-11	CERAMIC CHIP 0.1μF	10% 25V
C609	1-164-004-11	CERAMIC CHIP 0.1μF	10% 25V
C610	1-164-004-11	CERAMIC CHIP 0.1μF	10% 25V
C612	1-164-004-11	CERAMIC CHIP 0.1μF	10% 25V
C613	1-164-004-11	CERAMIC CHIP 0.1μF	10% 25V
C614	1-164-004-11	CERAMIC CHIP 0.1μF	10% 25V
C615	1-164-004-11	CERAMIC CHIP 0.1μF	10% 25V
C616	1-164-004-11	CERAMIC CHIP 0.1μF	10% 25V
C617	1-164-004-11	CERAMIC CHIP 0.1μF	10% 25V
C618	1-164-004-11	CERAMIC CHIP 0.1μF	10% 25V
C619	1-124-779-00	ELECT CHIP 10μF	20% 16V
C620	1-164-004-11	CERAMIC CHIP 0.1μF	10% 25V
C621	1-164-004-11	CERAMIC CHIP 0.1μF	10% 25V
C622	1-124-779-00	ELECT CHIP 10μF	20% 16V
C624	1-163-021-91	CERAMIC CHIP 0.01μF	10% 50V
C625	1-128-393-11	ELECT CHIP 100μF	20% 10V
C627	1-164-004-11	CERAMIC CHIP 0.1μF	10% 25V
C628	1-164-004-11	CERAMIC CHIP 0.1μF	10% 25V
C800	1-126-204-11	ELECT CHIP 47μF	20% 16V
C801	1-128-004-11	ELECT CHIP 10μF	20% 16V
C802	1-164-004-11	CERAMIC CHIP 0.1μF	10% 25V
C804	1-164-004-11	CERAMIC CHIP 0.1μF	10% 25V
C805	1-164-004-11	CERAMIC CHIP 0.1μF	10% 25V
C806	1-128-004-11	ELECT CHIP 10μF	20% 16V

Ref.No.	Part No.	Description			Remark
C808	1-164-004-11	CERAMIC CHIP 0.1μF	10%	25V	
C809	1-164-004-11	CERAMIC CHIP 0.1μF	10%	25V	
C810	1-164-004-11	CERAMIC CHIP 0.1μF	10%	25V	
C811	1-163-809-11	CERAMIC CHIP 0.047μF	10%	25V	
C813	1-164-004-11	CERAMIC CHIP 0.1μF	10%	25V	
C814	1-164-004-11	CERAMIC CHIP 0.1μF	10%	25V	
C815	1-164-004-11	CERAMIC CHIP 0.1μF	10%	25V	
C816	1-164-004-11	CERAMIC CHIP 0.1μF	10%	25V	
C817	1-164-004-11	CERAMIC CHIP 0.1μF	10%	25V	
C818	1-164-004-11	CERAMIC CHIP 0.1μF	10%	25V	
C819	1-128-004-11	ELECT CHIP 10μF	20%	16V	
C820	1-164-004-11	CERAMIC CHIP 0.1μF	10%	25V	
C821	1-164-004-11	CERAMIC CHIP 0.1μF	10%	25V	
C822	1-109-982-11	CERAMIC CHIP 1μF	10%	10V	
C823	1-163-031-11	CERAMIC CHIP 0.01μF		50V	
C824	1-164-004-11	CERAMIC CHIP 0.1μF	10%	25V	
C825	1-164-004-11	CERAMIC CHIP 0.1μF	10%	25V	
C826	1-164-004-11	CERAMIC CHIP 0.1μF	10%	25V	
C827	1-128-013-11	ELECT CHIP 1μF	20%	50V	
C828	1-110-666-11	ELECT CHIP 22μF	20%	6.3V	
C829	1-163-031-11	CERAMIC CHIP 0.01μF		50V	
C830	1-164-004-11	CERAMIC CHIP 0.1μF	10%	25V	
C831	1-128-004-11	ELECT CHIP 10μF	20%	16V	
C832	1-128-004-11	ELECT CHIP 10μF	20%	16V	
C833	1-128-004-11	ELECT CHIP 10μF	20%	16V	
C834	1-164-004-11	CERAMIC CHIP 0.1μF	10%	25V	
C835	1-164-004-11	CERAMIC CHIP 0.1μF	10%	25V	
C836	1-164-004-11	CERAMIC CHIP 0.1μF	10%	25V	
C837	1-164-004-11	CERAMIC CHIP 0.1μF	10%	25V	
C838	1-164-004-11	CERAMIC CHIP 0.1μF	10%	25V	
C839	1-163-031-11	CERAMIC CHIP 0.01μF		50V	
C840	1-164-004-11	CERAMIC CHIP 0.1μF	10%	25V	
C841	1-163-031-11	CERAMIC CHIP 0.01μF		50V	
C842	1-164-004-11	CERAMIC CHIP 0.1μF	10%	25V	
C843	1-164-004-11	CERAMIC CHIP 0.1μF	10%	25V	
C844	1-164-004-11	CERAMIC CHIP 0.1μF	10%	25V	
C845	1-164-004-11	CERAMIC CHIP 0.1μF	10%	25V	
C846	1-164-004-11	CERAMIC CHIP 0.1μF	10%	25V	
C1001	1-126-204-11	ELECT CHIP 47μF	20%	16V	
C1003	1-163-021-91	CERAMIC CHIP 0.01μF	10%	50V	
C1004	1-124-778-00	ELECT CHIP 22μF	20%	6.3V	
C1005	1-124-778-00	ELECT CHIP 22μF	20%	6.3V	
C1006	1-126-395-11	ELECT CHIP 22μF	20%	16V	
C1007	1-163-031-11	CERAMIC CHIP 0.01μF		50V	
C1011	1-163-227-11	CERAMIC CHIP 10PF	0.5PF	50V	
C1012	1-124-779-00	ELECT CHIP 10μF	20%	16V	
C1013	1-163-021-91	CERAMIC CHIP 0.01μF	10%	50V	
C1014	1-163-021-91	CERAMIC CHIP 0.01μF	10%	50V	
C1015	1-126-204-11	ELECT CHIP 47μF	20%	16V	
C1016	1-126-204-11	ELECT CHIP 47μF	20%	16V	
C1017	1-126-204-11	ELECT CHIP 47μF	20%	16V	
C1018	1-164-004-11	CERAMIC CHIP 0.1μF	10%	25V	
C1021	1-163-031-11	CERAMIC CHIP 0.01μF		50V	
C1022	1-164-004-11	CERAMIC CHIP 0.1μF	10%	25V	
C1023	1-163-021-91	CERAMIC CHIP 0.01μF	10%	50V	
C1024	1-164-004-11	CERAMIC CHIP 0.1μF	10%	25V	
C1026	1-163-021-91	CERAMIC CHIP 0.01μF	10%	50V	
C1027	1-128-393-11	ELECT CHIP 100μF	20%	10V	

Ref.No.	Part No.	Description			Remark
C1028	1-163-021-91	CERAMIC CHIP 0.01μF	10%	50V	
C1029	1-163-021-91	CERAMIC CHIP 0.01μF	10%	50V	
C1030	1-164-004-11	CERAMIC CHIP 0.1μF	10%	25V	
C1031	1-163-009-11	CERAMIC CHIP 0.001μF	10%	50V	
C1032	1-126-398-11	ELECT CHIP 4.7μF	20%	35V	
C1033	1-164-004-11	CERAMIC CHIP 0.1μF	10%	25V	
C1034	1-128-393-11	ELECT CHIP 100μF	20%	10V	
C1035	1-163-021-91	CERAMIC CHIP 0.01μF	10%	50V	
C1036	1-163-021-91	CERAMIC CHIP 0.01μF	10%	50V	
C1038	1-163-089-00	CERAMIC CHIP 6PF	0.5PF	50V	
C1039	1-163-021-91	CERAMIC CHIP 0.01μF	10%	50V	
C1041	1-163-021-91	CERAMIC CHIP 0.01μF	10%	50V	
C1043	1-128-004-11	ELECT CHIP 10μF	20%	16V	
C1044	1-163-227-11	CERAMIC CHIP 10PF	0.5PF	50V	
C1045	1-126-204-11	ELECT CHIP 47μF	20%	16V	
C1046	1-126-204-11	ELECT CHIP 47μF	20%	16V	
C1047	1-126-204-11	ELECT CHIP 47μF	20%	16V	
C1048	1-128-004-11	ELECT CHIP 10μF	20%	16V	
C1049	1-126-204-11	ELECT CHIP 47μF	20%	16V	
C1050	1-163-021-91	CERAMIC CHIP 0.01μF	10%	50V	
C1051	1-163-021-91	CERAMIC CHIP 0.01μF	10%	50V	
C1052	1-164-004-11	CERAMIC CHIP 0.1μF	10%	25V	
C1053	1-164-004-11	CERAMIC CHIP 0.1μF	10%	25V	
C1054	1-128-004-11	ELECT CHIP 10μF	20%	16V	
C1055	1-128-004-11	ELECT CHIP 10μF	20%	16V	
C1056	1-128-396-11	ELECT CHIP 470μF	20%	10V	
C1057	1-164-004-11	CERAMIC CHIP 0.1μF	10%	25V	
C1058	1-109-982-11	CERAMIC CHIP 1μF	10%	10V	
C1060	1-126-204-11	ELECT CHIP 47μF	20%	16V	
C1061	1-163-021-91	CERAMIC CHIP 0.01μF	10%	50V	
C1201	1-164-004-11	CERAMIC CHIP 0.1μF	10%	25V	
C1202	1-164-004-11	CERAMIC CHIP 0.1μF	10%	25V	
C1203	1-124-779-00	ELECT CHIP 10μF	20%	16V	
C1204	1-163-251-11	CERAMIC CHIP 100PF	5%	50V	
C1205	1-124-779-00	ELECT CHIP 10μF	20%	16V	
C1206	1-164-004-11	CERAMIC CHIP 0.1μF	10%	25V	
C1208	1-164-004-11	CERAMIC CHIP 0.1μF	10%	25V	
C1209	1-164-004-11	CERAMIC CHIP 0.1μF	10%	25V	
C1210	1-163-231-11	CERAMIC CHIP 15PF	5%	50V	
C1211	1-128-004-11	ELECT CHIP 10μF	20%	16V	
C1212	1-128-013-11	ELECT CHIP 1μF	20%	50V	
C1213	1-163-133-00	CERAMIC CHIP 470PF	5%	50V	
C1214	1-128-004-11	ELECT CHIP 10μF	20%	16V	
C1215	1-163-102-00	CERAMIC CHIP 24PF	5%	50V	
C1216	1-164-004-11	CERAMIC CHIP 0.1μF	10%	25V	
C1217	1-163-102-00	CERAMIC CHIP 24PF	5%	50V	
C1220	1-164-004-11	CERAMIC CHIP 0.1μF	10%	25V	
C1221	1-164-004-11	CERAMIC CHIP 0.1μF	10%	25V	
C1223	1-164-004-11	CERAMIC CHIP 0.1μF	10%	25V	
C1224	1-164-004-11	CERAMIC CHIP 0.1μF	10%	25V	
C1226	1-164-004-11	CERAMIC CHIP 0.1μF	10%	25V	
C1229	1-164-004-11	CERAMIC CHIP 0.1μF	10%	25V	
C1231	1-164-004-11	CERAMIC CHIP 0.1μF	10%	25V	
C1232	1-128-004-11	ELECT CHIP 10μF	20%	16V	
C1233	1-164-004-11	CERAMIC CHIP 0.1μF	10%	25V	
C1234	1-164-004-11	CERAMIC CHIP 0.1μF	10%	25V	
C1235	1-109-982-11	CERAMIC CHIP 1μF	10%	10V	
C1237	1-164-004-11	CERAMIC CHIP 0.1μF	10%	25V	
C1238	1-164-004-11	CERAMIC CHIP 0.1μF	10%	25V	

BA

Ref.No.	Part No.	Description	Remark
C1239	1-163-131-00	CERAMIC CHIP 390PF 5%	50V
C1240	1-128-396-11	ELECT CHIP 470μF 20%	10V
C1241	1-164-004-11	CERAMIC CHIP 0.1μF 10%	25V
C1242	1-164-004-11	CERAMIC CHIP 0.1μF 10%	25V
C1245	1-164-004-11	CERAMIC CHIP 0.1μF 10%	25V
C1247	1-128-004-11	ELECT CHIP 10μF 20%	16V
C1248	1-164-004-11	CERAMIC CHIP 0.1μF 10%	25V
C1249	1-164-004-11	CERAMIC CHIP 0.1μF 10%	25V
C1250	1-164-004-11	CERAMIC CHIP 0.1μF 10%	25V
C1252	1-128-004-11	ELECT CHIP 10μF 20%	16V
C1253	1-164-004-11	CERAMIC CHIP 0.1μF 10%	25V
C1254	1-164-004-11	CERAMIC CHIP 0.1μF 10%	25V
C1255	1-164-004-11	CERAMIC CHIP 0.1μF 10%	25V
C1256	1-164-004-11	CERAMIC CHIP 0.1μF 10%	25V
C1257	1-164-004-11	CERAMIC CHIP 0.1μF 10%	25V
C1258	1-128-007-11	ELECT CHIP 2.2μF 20%	35V
C1259	1-164-004-11	CERAMIC CHIP 0.1μF 10%	25V
C1260	1-164-004-11	CERAMIC CHIP 0.1μF 10%	25V
C1261	1-128-006-11	ELECT CHIP 4.7μF 20%	25V
C1281	1-124-779-00	ELECT CHIP 10μF 20%	16V
C1284	1-126-204-11	ELECT CHIP 47μF 20%	16V
C1285	1-164-004-11	CERAMIC CHIP 0.1μF 10%	25V
C1286	1-126-204-11	ELECT CHIP 47μF 20%	16V
C1287	1-126-204-11	ELECT CHIP 47μF 20%	16V
C1288	1-164-004-11	CERAMIC CHIP 0.1μF 10%	25V
C1289	1-126-204-11	ELECT CHIP 47μF 20%	16V
C1290	1-126-204-11	ELECT CHIP 47μF 20%	16V
C1291	1-164-004-11	CERAMIC CHIP 0.1μF 10%	25V
C1292	1-124-779-00	ELECT CHIP 10μF 20%	16V
C1293	1-163-031-11	CERAMIC CHIP 0.01μF	50V
C1294	1-163-227-11	CERAMIC CHIP 10PF 0.5PF	50V
C1295	1-163-021-91	CERAMIC CHIP 0.01μF 10%	50V
C1296	1-126-204-11	ELECT CHIP 47μF 20%	16V
C1297	1-163-031-11	CERAMIC CHIP 0.01μF	50V
C1401	1-163-224-11	CERAMIC CHIP 7PF 0.25PF	50V
C1402	1-163-809-11	CERAMIC CHIP 0.047μF 10%	25V
C1403	1-163-089-00	CERAMIC CHIP 6PF 0.5PF	50V
C1404	1-163-089-00	CERAMIC CHIP 6PF 0.5PF	50V
C1405	1-126-204-11	ELECT CHIP 47μF 20%	16V
C1406	1-164-004-11	CERAMIC CHIP 0.1μF 10%	25V
C1407	1-164-004-11	CERAMIC CHIP 0.1μF 10%	25V
C1408	1-163-017-00	CERAMIC CHIP 0.0047μF 10%	50V
C1409	1-163-133-00	CERAMIC CHIP 470PF 5%	50V
C1410	1-109-982-11	CERAMIC CHIP 1μF 10%	10V
C1411	1-164-489-11	CERAMIC CHIP 0.22μF 10%	16V
C1412	1-164-004-11	CERAMIC CHIP 0.1μF 10%	25V
C1413	1-163-089-00	CERAMIC CHIP 6PF 0.5PF	50V
C1414	1-107-823-11	CERAMIC CHIP 0.47μF 10%	16V
C1415	1-163-224-11	CERAMIC CHIP 7PF 0.25PF	50V
C1416	1-163-222-11	CERAMIC CHIP 5PF 0.25PF	50V
C1418	1-164-004-11	CERAMIC CHIP 0.1μF 10%	25V
C1419	1-164-004-11	CERAMIC CHIP 0.1μF 10%	25V
C1420	1-164-004-11	CERAMIC CHIP 0.1μF 10%	25V
C1421	1-126-935-11	ELECT 470μF 20%	16V
C1422	1-164-004-11	CERAMIC CHIP 0.1μF 10%	25V
C1424	1-164-505-11	CERAMIC CHIP 2.2μF	16V
C1425	1-164-505-11	CERAMIC CHIP 2.2μF	16V
C1426	1-164-004-11	CERAMIC CHIP 0.1μF 10%	25V
C1427	1-126-204-11	ELECT CHIP 47μF 20%	16V
C1430	1-126-398-11	ELECT CHIP 4.7μF 20%	35V
C1431	1-126-398-11	ELECT CHIP 4.7μF 20%	35V
C1434	1-164-004-11	CERAMIC CHIP 0.1μF 10%	25V
C1435	1-126-204-11	ELECT CHIP 47μF 20%	16V
C1436	1-126-603-11	ELECT CHIP 4.7μF 20%	35V
C1439	1-126-603-11	ELECT CHIP 4.7μF 20%	35V
C1440	1-163-235-11	CERAMIC CHIP 22PF 5%	50V
C1441	1-126-204-11	ELECT CHIP 47μF 20%	16V
C1443	1-164-004-11	CERAMIC CHIP 0.1μF 10%	25V
C1445	1-163-009-11	CERAMIC CHIP 0.001μF 10%	50V
C1446	1-128-004-11	ELECT CHIP 10μF 20%	16V
C1447	1-164-004-11	CERAMIC CHIP 0.1μF 10%	25V
C1448	1-164-004-11	CERAMIC CHIP 0.1μF 10%	25V
C1449	1-164-004-11	CERAMIC CHIP 0.1μF 10%	25V
C1450	1-163-021-91	CERAMIC CHIP 0.01μF 10%	50V
C1451	1-164-004-11	CERAMIC CHIP 0.1μF 10%	25V
C1452	1-109-982-11	CERAMIC CHIP 1μF 10%	10V
C1453	1-164-004-11	CERAMIC CHIP 0.1μF 10%	25V
C1454	1-164-004-11	CERAMIC CHIP 0.1μF 10%	25V
C1455	1-164-004-11	CERAMIC CHIP 0.1μF 10%	25V
C1456	1-163-021-91	CERAMIC CHIP 0.01μF 10%	50V
C1457	1-164-004-11	CERAMIC CHIP 0.1μF 10%	25V
C1458	1-109-982-11	CERAMIC CHIP 1μF 10%	10V
C1459	1-164-004-11	CERAMIC CHIP 0.1μF 10%	25V
C1460	1-164-004-11	CERAMIC CHIP 0.1μF 10%	25V
C1478	1-164-004-11	CERAMIC CHIP 0.1μF 10%	25V
C1479	1-128-004-11	ELECT CHIP 10μF 20%	16V
C1480	1-128-004-11	ELECT CHIP 10μF 20%	16V
C1481	1-128-004-11	ELECT CHIP 10μF 20%	16V
C1483	1-128-004-11	ELECT CHIP 10μF 20%	16V
C1484	1-164-004-11	CERAMIC CHIP 0.1μF 10%	25V
C1485	1-128-004-11	ELECT CHIP 10μF 20%	16V
C1486	1-164-004-11	CERAMIC CHIP 0.1μF 10%	25V
C1487	1-164-004-11	CERAMIC CHIP 0.1μF 10%	25V
C1488	1-128-004-11	ELECT CHIP 10μF 20%	16V
C1489	1-164-004-11	CERAMIC CHIP 0.1μF 10%	25V
C1600	1-124-779-00	ELECT CHIP 10μF 20%	16V
C1601	1-164-004-11	CERAMIC CHIP 0.1μF 10%	25V
C1602	1-126-204-11	ELECT CHIP 47μF 20%	16V
C1603	1-107-823-11	CERAMIC CHIP 0.47μF 10%	16V
C1604	1-107-823-11	CERAMIC CHIP 0.47μF 10%	16V
C1605	1-107-823-11	CERAMIC CHIP 0.47μF 10%	16V
C1606	1-107-823-11	CERAMIC CHIP 0.47μF 10%	16V
C1607	1-107-823-11	CERAMIC CHIP 0.47μF 10%	16V
C1608	1-107-823-11	CERAMIC CHIP 0.47μF 10%	16V
C1609	1-107-823-11	CERAMIC CHIP 0.47μF 10%	16V
C1610	1-107-823-11	CERAMIC CHIP 0.47μF 10%	16V
C1611	1-107-823-11	CERAMIC CHIP 0.47μF 10%	16V
C1612	1-107-823-11	CERAMIC CHIP 0.47μF 10%	16V
C1613	1-107-823-11	CERAMIC CHIP 0.47μF 10%	16V
C1614	1-124-779-00	ELECT CHIP 10μF 20%	16V
C1615	1-124-779-00	ELECT CHIP 10μF 20%	16V
C1617	1-164-004-11	CERAMIC CHIP 0.1μF 10%	25V
C1619	1-107-823-11	CERAMIC CHIP 0.47μF 10%	16V
C1620	1-164-004-11	CERAMIC CHIP 0.1μF 10%	25V
C1621	1-107-823-11	CERAMIC CHIP 0.47μF 10%	16V
C1622	1-107-823-11	CERAMIC CHIP 0.47μF 10%	16V

Ref.No.	Part No.	Description			Remark
C1623	1-164-004-11	CERAMIC CHIP 0.1μF	10%	25V	
C1624	1-126-204-11	ELECT CHIP 47μF	20%	16V	
C1625	1-164-004-11	CERAMIC CHIP 0.1μF	10%	25V	
C1626	1-126-394-11	ELECT CHIP 10μF	20%	16V	
C1627	1-163-021-91	CERAMIC CHIP 0.01μF	10%	50V	
C1628	1-107-823-11	CERAMIC CHIP 0.47μF	10%	16V	
C1629	1-126-204-11	ELECT CHIP 47μF	20%	16V	
C1630	1-107-823-11	CERAMIC CHIP 0.47μF	10%	16V	
C1631	1-107-823-11	CERAMIC CHIP 0.47μF	10%	16V	
C1632	1-109-982-11	CERAMIC CHIP 1μF	10%	10V	
C1633	1-126-204-11	ELECT CHIP 47μF	20%	16V	
C1634	1-163-259-91	CERAMIC CHIP 220PF	5%	50V	
C1635	1-107-823-11	CERAMIC CHIP 0.47μF	10%	16V	
C1636	1-107-823-11	CERAMIC CHIP 0.47μF	10%	16V	
C1637	1-107-823-11	CERAMIC CHIP 0.47μF	10%	16V	
C1638	1-107-823-11	CERAMIC CHIP 0.47μF	10%	16V	
C1639	1-107-823-11	CERAMIC CHIP 0.47μF	10%	16V	
C1640	1-107-823-11	CERAMIC CHIP 0.47μF	10%	16V	
C1641	1-126-401-11	ELECT CHIP 1μF	20%	50V	
C1642	1-107-823-11	CERAMIC CHIP 0.47μF	10%	16V	
C1643	1-107-823-11	CERAMIC CHIP 0.47μF	10%	16V	
C1644	1-107-823-11	CERAMIC CHIP 0.47μF	10%	16V	
C1645	1-163-021-91	CERAMIC CHIP 0.01μF	10%	50V	
C1646	1-164-004-11	CERAMIC CHIP 0.1μF	10%	25V	
C1647	1-124-779-00	ELECT CHIP 10μF	20%	16V	
C1648	1-107-823-11	CERAMIC CHIP 0.47μF	10%	16V	
C1649	1-163-021-91	CERAMIC CHIP 0.01μF	10%	50V	
C1650	1-126-204-11	ELECT CHIP 47μF	20%	16V	
C1651	1-107-823-11	CERAMIC CHIP 0.47μF	10%	16V	
C1652	1-107-823-11	CERAMIC CHIP 0.47μF	10%	16V	
C1653	1-126-204-11	ELECT CHIP 47μF	20%	16V	
C1654	1-164-004-11	CERAMIC CHIP 0.1μF	10%	25V	
C1655	1-164-004-11	CERAMIC CHIP 0.1μF	10%	25V	
C1656	1-107-823-11	CERAMIC CHIP 0.47μF	10%	16V	
C1657	1-126-401-11	ELECT CHIP 1μF	20%	50V	
C1658	1-163-021-91	CERAMIC CHIP 0.01μF	10%	50V	
C1659	1-164-004-11	CERAMIC CHIP 0.1μF	10%	25V	
C1670	1-126-204-11	ELECT CHIP 47μF	20%	16V	
C1761	1-164-505-11	CERAMIC CHIP 2.2μF		16V	
C1762	1-164-505-11	CERAMIC CHIP 2.2μF		16V	
C1763	1-164-505-11	CERAMIC CHIP 2.2μF		16V	
C1764	1-164-505-11	CERAMIC CHIP 2.2μF		16V	
C1765	1-164-505-11	CERAMIC CHIP 2.2μF		16V	
C1766	1-164-505-11	CERAMIC CHIP 2.2μF		16V	
C1767	1-164-505-11	CERAMIC CHIP 2.2μF		16V	
C1768	1-164-505-11	CERAMIC CHIP 2.2μF		16V	
C1769	1-164-505-11	CERAMIC CHIP 2.2μF		16V	
C1770	1-164-004-11	CERAMIC CHIP 0.1μF	10%	25V	
C1771	1-164-004-11	CERAMIC CHIP 0.1μF	10%	25V	
C1772	1-164-004-11	CERAMIC CHIP 0.1μF	10%	25V	
C1773	1-164-004-11	CERAMIC CHIP 0.1μF	10%	25V	
C1774	1-164-004-11	CERAMIC CHIP 0.1μF	10%	25V	
C1775	1-164-004-11	CERAMIC CHIP 0.1μF	10%	25V	
C1776	1-164-004-11	CERAMIC CHIP 0.1μF	10%	25V	
C1777	1-164-004-11	CERAMIC CHIP 0.1μF	10%	25V	
C1778	1-164-004-11	CERAMIC CHIP 0.1μF	10%	25V	
C1779	1-128-004-11	ELECT CHIP 10μF	20%	16V	
C1783	1-128-004-11	ELECT CHIP 10μF	20%	16V	
C1784	1-164-004-11	CERAMIC CHIP 0.1μF	10%	25V	

Ref.No.	Part No.	Description			Remark
C1801	1-163-021-91	CERAMIC CHIP 0.01μF	10%	50V	
C1802	1-126-603-11	ELECT CHIP 4.7μF	20%	16V	
C1803	1-164-004-11	CERAMIC CHIP 0.1μF	10%	25V	
C1804	1-164-489-11	CERAMIC CHIP 0.22μF	10%	16V	
C1805	1-164-489-11	CERAMIC CHIP 0.22μF	10%	16V	
C1806	1-163-021-91	CERAMIC CHIP 0.01μF	10%	50V	
C1807	1-164-004-11	CERAMIC CHIP 0.1μF	10%	25V	
C1808	1-109-982-11	CERAMIC CHIP 1μF	10%	10V	
C1809	1-164-182-11	CERAMIC CHIP 0.0033μF	10%	50V	
C1810	1-164-004-11	CERAMIC CHIP 0.1μF	10%	25V	
C1811	1-164-489-11	CERAMIC CHIP 0.22μF	10%	16V	
C1812	1-109-982-11	CERAMIC CHIP 1μF	10%	10V	
C1813	1-163-021-91	CERAMIC CHIP 0.01μF	10%	50V	
C1814	1-164-004-11	CERAMIC CHIP 0.1μF	10%	25V	
C1816	1-163-021-91	CERAMIC CHIP 0.01μF	10%	50V	
C1817	1-163-021-91	CERAMIC CHIP 0.01μF	10%	50V	
C1820	1-164-004-11	CERAMIC CHIP 0.1μF	10%	25V	
C1822	1-128-004-11	ELECT CHIP 10μF	20%	16V	
C1823	1-164-004-11	CERAMIC CHIP 0.1μF	10%	25V	
C1824	1-164-004-11	CERAMIC CHIP 0.1μF	10%	25V	
C1827	1-109-982-11	CERAMIC CHIP 1μF	10%	10V	
C1828	1-164-004-11	CERAMIC CHIP 0.1μF	10%	25V	
C1829	1-164-004-11	CERAMIC CHIP 0.1μF	10%	25V	
C1832	1-109-982-11	CERAMIC CHIP 1μF	10%	10V	
C1833	1-128-004-11	ELECT CHIP 10μF	20%	16V	
C1834	1-164-004-11	CERAMIC CHIP 0.1μF	10%	25V	
C1835	1-164-004-11	CERAMIC CHIP 0.1μF	10%	25V	
C1836	1-163-021-91	CERAMIC CHIP 0.01μF	10%	50V	
C1837	1-163-021-91	CERAMIC CHIP 0.01μF	10%	50V	
C1838	1-163-021-91	CERAMIC CHIP 0.01μF	10%	50V	
C1839	1-126-206-11	ELECT CHIP 100μF	20%	6.3V	
C1840	1-124-778-00	ELECT CHIP 22μF	20%	6.3V	
C1841	1-163-021-91	CERAMIC CHIP 0.01μF	10%	50V	
C2000	1-124-779-00	ELECT CHIP 10μF	20%	16V	
C2001	1-163-021-91	CERAMIC CHIP 0.01μF	10%	50V	
C2002	1-109-982-11	CERAMIC CHIP 1μF	10%	10V	
C2003	1-164-004-11	CERAMIC CHIP 0.1μF	10%	25V	
C2004	1-163-021-91	CERAMIC CHIP 0.01μF	10%	50V	
C2005	1-164-004-11	CERAMIC CHIP 0.1μF	10%	25V	
C2006	1-164-004-11	CERAMIC CHIP 0.1μF	10%	25V	
C2007	1-163-021-91	CERAMIC CHIP 0.01μF	10%	50V	
C2009	1-164-004-11	CERAMIC CHIP 0.1μF	10%	25V	
C2101	1-126-394-11	ELECT CHIP 10μF	20%	16V	
C2102	1-164-004-11	CERAMIC CHIP 0.1μF	10%	25V	
C2103	1-126-394-11	ELECT CHIP 10μF	20%	16V	
C2104	1-126-394-11	ELECT CHIP 10μF	20%	16V	
C2105	1-164-004-11	CERAMIC CHIP 0.1μF	10%	25V	
C2106	1-126-394-11	ELECT CHIP 10μF	20%	16V	
C2107	1-128-528-11	ELECT 470μF	20%	25V	
C2108	1-115-857-11	ELECT 0.001F	20%	16V	
C2109	1-115-857-11	ELECT 0.001F	20%	16V	
C2110	1-164-004-11	CERAMIC CHIP 0.1μF	10%	25V	
C2111	1-126-394-11	ELECT CHIP 10μF	20%	16V	
C2112	1-164-004-11	CERAMIC CHIP 0.1μF	10%	25V	
C2113	1-126-394-11	ELECT CHIP 10μF	20%	16V	
C2114	1-126-394-11	ELECT CHIP 10μF	20%	16V	
C2115	1-164-004-11	CERAMIC CHIP 0.1μF	10%	25V	
C2116	1-126-394-11	ELECT CHIP 10μF	20%	16V	

BA

Ref.No.	Part No.	Description	Remark
C2117	1-126-394-11	ELECT CHIP 10μF 20% 16V	
C2118	1-164-004-11	CERAMIC CHIP 0.1μF 10% 25V	
C2119	1-126-394-11	ELECT CHIP 10μF 20% 16V	
C2120	1-126-399-11	ELECT CHIP 10μF 20% 35V	
C2121	1-164-004-11	CERAMIC CHIP 0.1μF 10% 25V	
C2122	1-126-394-11	ELECT CHIP 10μF 20% 16V	
C2123	1-126-394-11	ELECT CHIP 10μF 20% 16V	
C2124	1-164-004-11	CERAMIC CHIP 0.1μF 10% 25V	
C2125	1-126-394-11	ELECT CHIP 10μF 20% 16V	
C2126	1-164-004-11	CERAMIC CHIP 0.1μF 10% 25V	
C2127	1-164-004-11	CERAMIC CHIP 0.1μF 10% 25V	
C2207	1-164-004-11	CERAMIC CHIP 0.1μF 10% 25V	
	<CONNECTOR>		
CN340	* 1-778-891-11	CONNECTOR, BOARD TO BOARD	
CN341	* 1-778-891-11	CONNECTOR, BOARD TO BOARD	
CN346	* 1-565-689-11	HEADDER, FLAT CABLE 60P	
CN347	1-562-579-21	RECEPTACLE, CONNECTOR 2P	
CN347	* 1-564-948-21	PIN, CONNECTOR 3P	
CN348	1-562-579-21	RECEPTACLE, CONNECTOR 2P	
CN348	* 1-564-948-21	PIN, CONNECTOR 3P	
CN349	1-562-579-21	RECEPTACLE, CONNECTOR 2P	
CN349	* 1-564-948-21	PIN, CONNECTOR 3P	
CN350	1-562-579-21	RECEPTACLE, CONNECTOR 2P	
CN350	* 1-564-948-21	PIN, CONNECTOR 3P	
CN351	* 1-564-510-11	PLUG, CONNECTOR 7P	
CN352	* 1-564-519-11	PLUG, CONNECTOR 4P	
	<DIODE>		
D1	8-719-800-76	DIODE 1SS226	
D2	8-719-800-76	DIODE 1SS226	
D3	8-719-800-76	DIODE 1SS226	
D4	8-719-800-76	DIODE 1SS226	
D5	8-719-801-78	DIODE 1SS184	
D6	8-719-801-78	DIODE 1SS184	
D7	8-719-800-76	DIODE 1SS226	
D8	8-719-801-78	DIODE 1SS184	
D9	8-719-801-78	DIODE 1SS184	
D10	8-719-801-78	DIODE 1SS184	
D11	8-719-801-78	DIODE 1SS184	
D501	8-719-105-46	DIODE RD3.3M-B2	
D502	8-719-105-46	DIODE RD3.3M-B2	
D503	8-719-105-46	DIODE RD3.3M-B2	
D505	8-719-105-73	DIODE RD4.7M-B2	
D600	8-719-801-78	DIODE 1SS184	
D601	8-719-801-78	DIODE 1SS184	
D800	8-719-801-78	DIODE 1SS184	
D801	8-719-801-78	DIODE 1SS184	
D802	8-719-801-78	DIODE 1SS184	
D803	8-719-801-78	DIODE 1SS184	
D804	8-719-801-78	DIODE 1SS184	
D805	8-719-801-78	DIODE 1SS184	
D806	8-719-105-82	DIODE RD5.1M-B2	
D807	8-719-801-78	DIODE 1SS184	
D808	8-719-801-78	DIODE 1SS184	
D809	8-719-801-78	DIODE 1SS184	
D810	8-719-801-78	DIODE 1SS184	
D811	8-719-801-78	DIODE 1SS184	
D812	8-719-801-78	DIODE 1SS184	
D813	8-719-801-78	DIODE 1SS184	
D1001	8-719-801-78	DIODE 1SS184	
D1401	8-719-914-43	DIODE DAN202K	
D1600	8-719-911-19	DIODE 1SS119-25	
D1601	8-719-801-78	DIODE 1SS184	
D2101	8-719-062-22	DIODE SB30-03P-TD	
D2102	8-719-801-78	DIODE 1SS184	
D2103	8-719-801-78	DIODE 1SS184	
D2200	8-719-801-78	DIODE 1SS184	
D2201	8-719-106-70	DIODE RD12M-B1	
D2202	8-719-045-99	DIODE RD2.2M-T1B	
D2203	8-719-045-99	DIODE RD2.2M-T1B	
D2204	8-719-800-76	DIODE 1SS226	
D2205	8-719-800-76	DIODE 1SS226	
	<FERRITE BEAD>		
FB1201	1-543-775-11	FERRITE 0μH	
FB1202	1-543-775-11	FERRITE 0μH	
FB1203	1-543-775-11	FERRITE 0μH	
FB1207	1-414-234-22	INDUCTOR CHIP 0μH	
FB1208	1-414-234-22	INDUCTOR CHIP 0μH	
FB1210	1-414-234-22	INDUCTOR CHIP 0μH	
FB1212	1-414-234-22	INDUCTOR CHIP 0μH	
FB1213	1-414-234-22	INDUCTOR CHIP 0μH	
FB1215	1-414-234-22	INDUCTOR CHIP 0μH	
	<FILTER>		
FL451	1-234-176-21	FERRITE 37μH	
FL501	1-234-176-21	FERRITE 37μH	
FL551	1-234-176-21	FERRITE 37μH	
FL1001	1-239-289-11	FILTER, LOW PASS	
FL1002	1-239-289-11	FILTER, LOW PASS	
FL1003	1-239-289-11	FILTER, LOW PASS	
FL1201	1-239-847-11	FILTER, LOW PASS	
FL1203	1-239-289-11	FILTER, LOW PASS	
FL1204	1-239-289-11	FILTER, LOW PASS	
	<IC>		
IC1	8-759-431-38	IC MAX4121CSA-TE2	
IC2	8-759-431-38	IC MAX4121CSA-TE2	
IC3	8-759-431-38	IC MAX4121CSA-TE2	
IC4	8-759-981-48	IC TL082M	
IC5	8-759-542-11	IC MAX4223ESA-TG06	
IC8	8-759-542-11	IC MAX4223ESA-TG06	
IC10	8-759-542-11	IC MAX4223ESA-TG06	
IC11	8-759-344-12	IC GS4981CTA	
IC12	8-759-092-82	IC SN75157PS-ELL2000	
IC13	8-759-381-53	IC UPC814G2-E2	
IC200	8-752-052-77	IC CXA1450M	
IC201	8-759-984-88	IC LM6361M	
IC202	8-759-431-38	IC MAX4121CSA-TE2	
IC203	8-759-431-38	IC MAX4121CSA-TE2	
IC204	8-759-457-54	IC AD835AR-REEL7	
IC205	8-759-198-34	IC TA75S558F	

Ref.No.	Part No.	Description	Remark
IC206	8-752-052-77	IC CXA1450M	
IC207	8-759-431-38	IC MAX4121CSA-TE2	
IC208	8-759-431-38	IC MAX4121CSA-TE2	
IC209	8-759-984-88	IC LM6361M	
IC210	8-759-457-54	IC AD835AR-REEL7	
IC211	8-759-198-34	IC TA75S558F	
IC212	8-752-052-77	IC CXA1450M	
IC213	8-759-431-38	IC MAX4121CSA-TE2	
IC214	8-759-431-38	IC MAX4121CSA-TE2	
IC215	8-759-984-88	IC LM6361M	
IC216	8-759-198-34	IC TA75S558F	
IC217	8-759-457-54	IC AD835AR-REEL7	
IC218	8-759-564-49	IC TC7W53FU(TE12R)	
IC219	8-759-062-66	IC TC7S66F	
IC220	8-759-381-53	IC UPC814G2-E2	
IC221	8-759-035-93	IC SC7S32F	
IC401	8-759-031-84	IC SC7S04F	
IC402	8-752-075-54	IC CXA3069S	
IC403	8-759-012-13	IC MC10H125M	
IC404	8-759-445-85	IC LM1283N	
IC452	8-759-542-11	IC MAX4223ESA-TG06	
IC502	8-759-542-11	IC MAX4223ESA-TG06	
IC503	8-759-198-34	IC TA75S558F	
IC504	8-759-198-34	IC TA75S558F	
IC552	8-759-542-11	IC MAX4223ESA-TG06	
IC600	8-759-251-32	IC NJM4200M	
IC601	8-759-251-32	IC NJM4200M	
IC602	8-759-251-32	IC NJM4200M	
IC603	8-759-981-48	IC TL082M	
IC604	8-759-981-48	IC TL082M	
IC605	8-759-981-48	IC TL082M	
IC606	8-759-198-34	IC TA75S558F	
IC607	8-759-198-34	IC TA75S558F	
IC608	8-759-198-34	IC TA75S558F	
IC609	8-759-326-65	IC MP7670AS-TE2	
IC610	8-759-926-05	IC SN74HC125ANS	
IC611	8-759-326-65	IC MP7670AS-TE2	
IC612	8-759-908-15	IC TL431CLP	
IC613	8-759-443-72	IC RH5VL43AA-T1	
IC614	8-759-198-34	IC TA75S558F	
IC801	8-759-981-48	IC TL082M	
IC802	8-759-981-48	IC TL082M	
IC803	8-759-981-48	IC TL082M	
IC804	8-759-100-93	IC UPC393G2	
IC805	8-759-981-48	IC TL082M	
IC807	8-759-198-34	IC TA75S558F	
IC808	8-759-198-34	IC TA75S558F	
IC809	8-759-198-34	IC TA75S558F	
IC810	8-759-198-34	IC TA75S558F	
IC811	8-759-198-34	IC TA75S558F	
IC812	8-759-198-34	IC TA75S558F	
IC1001	8-759-256-44	IC NJM2235M-TE2	
IC1002	8-752-068-45	IC CXA1855Q	
IC1003	8-752-372-78	IC CXD2024AQ	
IC1004	8-759-711-62	IC NJM2240M	
IC1005	8-759-353-02	IC NJM2533M(TE2)	
IC1006	8-759-256-44	IC NJM2235M-TE2	
IC1202	8-759-473-05	IC UPD424210LE-60-E2	
IC1203	8-759-473-04	IC UPD64081GF-3BA	
IC1205	8-759-269-92	IC SN74HCU04ANS-E20	
IC1206	8-759-161-24	IC UPC659AGS-E2	
IC1207	8-759-460-74	IC BA05FP-E2	
IC1208	8-759-460-72	IC BA033FP-E2	
IC1402	8-759-295-47	IC TDA9141-N2C	
IC1403	8-759-565-20	IC TDA4665T/V5-118	
IC1404	8-759-335-57	IC MM1112XF	
IC1407	8-759-335-57	IC MM1112XF	
IC1408	8-759-008-45	IC MC74HC4538F	
IC1409	8-759-344-12	IC GS4981CTA	
IC1410	8-759-242-74	IC TC7W04F	
IC1411	8-759-234-20	IC TC7S08F	
IC1413	8-759-242-76	IC TC7W08F	
IC1414	8-759-381-53	IC UPC814G2-E2	
IC1600	8-752-080-76	IC CXA2101Q	
IC1602	8-759-242-74	IC TC7W04F	
IC1603	8-759-234-20	IC TC7S08F	
IC1712	8-752-082-49	IC CXA2119M	
IC1801	8-752-073-52	IC CXA2016S	
IC1802	8-759-926-18	IC SN74HC157ANS	
IC1803	8-759-035-93	IC SC7S32F	
IC1804	8-759-926-18	IC SN74HC157ANS	
IC1805	8-759-195-02	IC TC7S86F-TE85L	
IC1806	8-759-195-02	IC TC7S86F-TE85L	
IC1807	8-759-564-49	IC TC7W53FU(TE12R)	
IC1811	8-759-926-18	IC SN74HC157ANS	
IC1813	8-759-439-67	IC TC7W126FU(TE12R)	
IC1814	8-759-242-74	IC TC7W04F	
IC2000	8-759-175-04	IC PCF8574T-T	
IC2001	8-752-072-94	IC CXA1875AM-T4	
IC2002	8-759-175-04	IC PCF8574T-T	
IC2003	8-752-072-94	IC CXA1875AM-T4	
IC2004	8-759-175-04	IC PCF8574T-T	
IC2005	8-752-072-94	IC CXA1875AM-T4	
IC2006	8-759-234-20	IC TC7S08F	
IC2101	8-759-460-74	IC BA05FP-E2	
IC2102	8-759-460-74	IC BA05FP-E2	
IC2103	8-759-391-72	IC LM2576T-12LB03	
IC2104	8-759-460-79	IC BA09FP-E2	
IC2105	8-759-460-79	IC BA09FP-E2	
IC2106	8-759-539-89	IC LM2990SX-5.0	
IC2107	8-759-549-53	IC LM2990SX-12	
IC2108	8-759-460-74	IC BA05FP-E2	
IC2109	8-759-234-20	IC TC7S08F	
IC2110	8-759-431-39	IC MAX8213BCSE-TE2	
IC2202	8-759-234-20	IC TC7S08F	
		<COIL>	
L200	1-414-753-91	INDUCTOR 4.7μH	
L201	1-414-753-91	INDUCTOR 4.7μH	
L202	1-414-753-91	INDUCTOR 4.7μH	
L203	1-414-753-91	INDUCTOR 4.7μH	
L204	1-414-753-91	INDUCTOR 4.7μH	
L205	1-414-753-91	INDUCTOR 4.7μH	
L1001	1-412-058-11	INDUCTOR CHIP 10μH	
L1002	1-412-058-11	INDUCTOR CHIP 10μH	
L1003	1-412-058-11	INDUCTOR CHIP 10μH	
L1005	1-412-058-11	INDUCTOR CHIP 10μH	

BA

Ref.No.	Part No.	Description	Remark
L1006	1-412-058-11	INDUCTOR CHIP 10μH	
L1007	1-412-058-11	INDUCTOR CHIP 10μH	
L1201	1-410-200-31	INDUCTOR CHIP 4.7μH	
L1202	1-412-058-11	INDUCTOR CHIP 10μH	
L1203	1-414-753-91	INDUCTOR 4.7μH	
L1204	1-414-753-91	INDUCTOR 4.7μH	
L1205	1-414-753-91	INDUCTOR 4.7μH	
L1206	1-414-753-91	INDUCTOR 4.7μH	
L1207	1-414-753-91	INDUCTOR 4.7μH	
L1210	1-412-058-11	INDUCTOR CHIP 10μH	
L1211	1-412-058-11	INDUCTOR CHIP 10μH	
L1212	1-412-058-11	INDUCTOR CHIP 10μH	
L1213	1-412-058-11	INDUCTOR CHIP 10μH	
L1214	1-412-058-11	INDUCTOR CHIP 10μH	
L1215	1-412-058-11	INDUCTOR CHIP 10μH	
L1216	1-412-058-11	INDUCTOR CHIP 10μH	
L1401	1-414-235-22	INDUCTOR CHIP 0μH	
L1402	1-412-058-11	INDUCTOR CHIP 10μH	
L1403	1-414-235-22	INDUCTOR CHIP 0μH	
L1404	1-412-058-11	INDUCTOR CHIP 10μH	
L1405	1-412-058-11	INDUCTOR CHIP 10μH	
L1406	1-414-756-11	INDUCTOR 47μH	
L1407	1-412-058-11	INDUCTOR CHIP 10μH	
L1408	1-412-058-11	INDUCTOR CHIP 10μH	
L1409	1-412-058-11	INDUCTOR CHIP 10μH	
L1410	1-412-058-11	INDUCTOR CHIP 10μH	
L1411	1-412-058-11	INDUCTOR CHIP 10μH	
L1600	1-412-058-11	INDUCTOR CHIP 10μH	
L1601	1-412-058-11	INDUCTOR CHIP 10μH	
L1602	1-412-058-11	INDUCTOR CHIP 10μH	
L1603	1-412-058-11	INDUCTOR CHIP 10μH	
L1604	1-412-058-11	INDUCTOR CHIP 10μH	
L1708	1-412-058-11	INDUCTOR CHIP 10μH	
L1709	1-412-058-11	INDUCTOR CHIP 10μH	
L1800	1-412-058-11	INDUCTOR CHIP 10μH	
L1801	1-412-058-11	INDUCTOR CHIP 10μH	
L2000	1-412-058-11	INDUCTOR CHIP 10μH	
L2101	1-406-663-21	INDUCTOR 47μH	
L2102	1-406-663-21	INDUCTOR 47μH	
L2103	1-406-663-21	INDUCTOR 47μH	
L2104	1-406-979-11	INDUCTOR 220μH	
L2105	1-406-979-11	INDUCTOR 220μH	
L2106	1-406-663-21	INDUCTOR 47μH	
L2107	1-406-663-21	INDUCTOR 47μH	
L2108	1-406-663-21	INDUCTOR 47μH	
L2109	1-412-533-21	INDUCTOR 47μH	
L2110	1-412-533-21	INDUCTOR 47μH	
L2111	1-406-663-21	INDUCTOR 47μH	
	<TRANSISTOR>		
Q1	8-729-230-49	TRANSISTOR 2SC2712-YG	
Q2	8-729-230-49	TRANSISTOR 2SC2712-YG	
Q3	8-729-216-22	TRANSISTOR 2SA1162-G	
Q4	8-729-230-49	TRANSISTOR 2SC2712-YG	
Q5	8-729-230-49	TRANSISTOR 2SC2712-YG	
Q6	8-729-216-22	TRANSISTOR 2SA1162-G	
Q8	8-729-112-65	TRANSISTOR 2SA1462-Y33	
Q9	8-729-230-49	TRANSISTOR 2SC2712-YG	

Ref.No.	Part No.	Description	Remark
Q10	8-729-140-75	TRANSISTOR 2SD999-CLCK	
Q11	8-729-230-49	TRANSISTOR 2SC2712-YG	
Q12	8-729-230-49	TRANSISTOR 2SC2712-YG	
Q13	8-729-216-22	TRANSISTOR 2SA1162-G	
Q14	8-729-230-49	TRANSISTOR 2SC2712-YG	
Q16	8-729-101-07	TRANSISTOR 2SB798-DL	
Q18	8-729-230-49	TRANSISTOR 2SC2712-YG	
Q19	8-729-230-49	TRANSISTOR 2SC2712-YG	
Q20	8-729-230-49	TRANSISTOR 2SC2712-YG	
Q21	8-729-101-07	TRANSISTOR 2SB798-DL	
Q22	8-729-230-49	TRANSISTOR 2SC2712-YG	
Q23	8-729-230-49	TRANSISTOR 2SC2712-YG	
Q24	8-729-230-49	TRANSISTOR 2SC2712-YG	
Q25	8-729-216-22	TRANSISTOR 2SA1162-G	
Q200	1-801-806-11	TRANSISTOR DTC144EKA-T146	
Q201	8-729-107-31	TRANSISTOR 2SC3545-T43	
Q202	8-729-116-04	TRANSISTOR 2SK160-K4	
Q203	8-729-107-31	TRANSISTOR 2SC3545-T43	
Q204	8-729-116-04	TRANSISTOR 2SK160-K4	
Q205	8-729-107-31	TRANSISTOR 2SC3545-T43	
Q206	8-729-116-04	TRANSISTOR 2SK160-K4	
Q207	8-729-230-49	TRANSISTOR 2SC2712-YG	
Q208	1-801-806-11	TRANSISTOR DTC144EKA-T146	
Q209	8-729-230-49	TRANSISTOR 2SC2712-YG	
Q210	1-801-806-11	TRANSISTOR DTC144EKA-T146	
Q211	8-729-230-49	TRANSISTOR 2SC2712-YG	
Q212	1-801-806-11	TRANSISTOR DTC144EKA-T146	
Q213	8-729-230-49	TRANSISTOR 2SC2712-YG	
Q451	8-729-107-31	TRANSISTOR 2SC3545-T43	
Q455	8-729-107-31	TRANSISTOR 2SC3545-T43	
Q456	8-729-107-31	TRANSISTOR 2SC3545-T43	
Q457	8-729-107-31	TRANSISTOR 2SC3545-T43	
Q501	8-729-107-31	TRANSISTOR 2SC3545-T43	
Q505	8-729-107-31	TRANSISTOR 2SC3545-T43	
Q506	8-729-107-31	TRANSISTOR 2SC3545-T43	
Q507	8-729-107-31	TRANSISTOR 2SC3545-T43	
Q551	8-729-107-31	TRANSISTOR 2SC3545-T43	
Q555	8-729-107-31	TRANSISTOR 2SC3545-T43	
Q556	8-729-107-31	TRANSISTOR 2SC3545-T43	
Q557	8-729-107-31	TRANSISTOR 2SC3545-T43	
Q600	1-801-806-11	TRANSISTOR DTC144EKA-T146	
Q601	1-801-806-11	TRANSISTOR DTC144EKA-T146	
Q602	1-801-806-11	TRANSISTOR DTC144EKA-T146	
Q800	8-729-230-49	TRANSISTOR 2SC2712-YG	
Q801	8-729-230-49	TRANSISTOR 2SC2712-YG	
Q802	8-729-230-49	TRANSISTOR 2SC2712-YG	
Q803	8-729-216-22	TRANSISTOR 2SA1162-G	
Q805	8-729-230-49	TRANSISTOR 2SC2712-YG	
Q807	8-729-216-22	TRANSISTOR 2SA1162-G	
Q808	8-729-230-49	TRANSISTOR 2SC2712-YG	
Q809	8-729-230-49	TRANSISTOR 2SC2712-YG	
Q810	8-729-230-49	TRANSISTOR 2SC2712-YG	
Q811	8-729-230-49	TRANSISTOR 2SC2712-YG	
Q812	8-729-216-22	TRANSISTOR 2SA1162-G	
Q813	8-729-230-49	TRANSISTOR 2SC2712-YG	
Q814	8-729-230-49	TRANSISTOR 2SC2712-YG	
Q815	8-729-230-49	TRANSISTOR 2SC2712-YG	
Q816	8-729-230-49	TRANSISTOR 2SC2712-YG	

Ref.No.	Part No.	Description	Remark
Q817	8-729-230-49	TRANSISTOR 2SC2712-YG	
Q1000	8-729-230-49	TRANSISTOR 2SC2712-YG	
Q1001	8-729-230-49	TRANSISTOR 2SC2712-YG	
Q1002	8-729-230-49	TRANSISTOR 2SC2712-YG	
Q1004	8-729-216-22	TRANSISTOR 2SA1162-G	
Q1005	8-729-216-22	TRANSISTOR 2SA1162-G	
Q1006	8-729-230-49	TRANSISTOR 2SC2712-YG	
Q1007	8-729-230-49	TRANSISTOR 2SC2712-YG	
Q1008	8-729-216-22	TRANSISTOR 2SA1162-G	
Q1009	8-729-216-22	TRANSISTOR 2SA1162-G	
Q1010	8-729-230-49	TRANSISTOR 2SC2712-YG	
Q1011	8-729-230-49	TRANSISTOR 2SC2712-YG	
Q1012	8-729-216-22	TRANSISTOR 2SA1162-G	
Q1013	8-729-216-22	TRANSISTOR 2SA1162-G	
Q1014	8-729-230-49	TRANSISTOR 2SC2712-YG	
Q1015	8-729-230-49	TRANSISTOR 2SC2712-YG	
Q1016	8-729-216-22	TRANSISTOR 2SA1162-G	
Q1017	8-729-230-49	TRANSISTOR 2SC2712-YG	
Q1018	8-729-230-49	TRANSISTOR 2SC2712-YG	
Q1019	8-729-216-22	TRANSISTOR 2SA1162-G	
Q1020	8-729-216-22	TRANSISTOR 2SA1162-G	
Q1021	8-729-230-49	TRANSISTOR 2SC2712-YG	
Q1022	8-729-230-49	TRANSISTOR 2SC2712-YG	
Q1023	8-729-216-22	TRANSISTOR 2SA1162-G	
Q1024	8-729-230-49	TRANSISTOR 2SC2712-YG	
Q1025	8-729-216-22	TRANSISTOR 2SA1162-G	
Q1028	8-729-230-49	TRANSISTOR 2SC2712-YG	
Q1029	8-729-216-22	TRANSISTOR 2SA1162-G	
Q1030	8-729-230-49	TRANSISTOR 2SC2712-YG	
Q1031	1-801-806-11	TRANSISTOR DTC144EKA-T146	
Q1033	8-729-230-49	TRANSISTOR 2SC2712-YG	
Q1201	8-729-230-49	TRANSISTOR 2SC2712-YG	
Q1202	8-729-230-49	TRANSISTOR 2SC2712-YG	
Q1203	8-729-216-22	TRANSISTOR 2SA1162-G	
Q1204	8-729-230-49	TRANSISTOR 2SC2712-YG	
Q1205	8-729-230-49	TRANSISTOR 2SC2712-YG	
Q1206	8-729-216-22	TRANSISTOR 2SA1162-G	
Q1207	8-729-230-49	TRANSISTOR 2SC2712-YG	
Q1208	8-729-216-22	TRANSISTOR 2SA1162-G	
Q1216	8-729-216-22	TRANSISTOR 2SA1162-G	
Q1217	8-729-230-49	TRANSISTOR 2SC2712-YG	
Q1218	8-729-230-49	TRANSISTOR 2SC2712-YG	
Q1219	8-729-216-22	TRANSISTOR 2SA1162-G	
Q1220	8-729-216-22	TRANSISTOR 2SA1162-G	
Q1221	8-729-230-49	TRANSISTOR 2SC2712-YG	
Q1222	8-729-230-49	TRANSISTOR 2SC2712-YG	
Q1223	8-729-216-22	TRANSISTOR 2SA1162-G	
Q1224	8-729-230-49	TRANSISTOR 2SC2712-YG	
Q1225	8-729-230-49	TRANSISTOR 2SC2712-YG	
Q1226	8-729-216-22	TRANSISTOR 2SA1162-G	
Q1227	8-729-216-22	TRANSISTOR 2SA1162-G	
Q1228	8-729-230-49	TRANSISTOR 2SC2712-YG	
Q1229	8-729-230-49	TRANSISTOR 2SC2712-YG	
Q1230	8-729-216-22	TRANSISTOR 2SA1162-G	
Q1403	8-729-230-49	TRANSISTOR 2SC2712-YG	
Q1404	1-801-806-11	TRANSISTOR DTC144EKA-T146	
Q1405	8-729-230-49	TRANSISTOR 2SC2712-YG	
Q1408	8-729-230-49	TRANSISTOR 2SC2712-YG	
Q1414	8-729-230-49	TRANSISTOR 2SC2712-YG	
Q1415	8-729-230-49	TRANSISTOR 2SC2712-YG	
Q1416	8-729-230-49	TRANSISTOR 2SC2712-YG	
Q1417	8-729-107-31	TRANSISTOR 2SC3545-T43	
Q1418	8-729-230-49	TRANSISTOR 2SC2712-YG	
Q1419	8-729-230-49	TRANSISTOR 2SC2712-YG	
Q1420	8-729-230-49	TRANSISTOR 2SC2712-YG	
Q1421	8-729-230-49	TRANSISTOR 2SC2712-YG	
Q1422	8-729-230-49	TRANSISTOR 2SC2712-YG	
Q1423	8-729-216-22	TRANSISTOR 2SA1162-G	
Q1424	8-729-216-22	TRANSISTOR 2SA1162-G	
Q1425	8-729-903-10	TRANSISTOR FMW1	
Q1426	8-729-216-22	TRANSISTOR 2SA1162-G	
Q1427	8-729-216-22	TRANSISTOR 2SA1162-G	
Q1428	8-729-230-49	TRANSISTOR 2SC2712-YG	
Q1429	8-729-216-22	TRANSISTOR 2SA1162-G	
Q1600	8-729-230-49	TRANSISTOR 2SC2712-YG	
Q1601	8-729-119-78	TRANSISTOR 2SC2785-HFE	
Q1602	8-729-230-49	TRANSISTOR 2SC2712-YG	
Q1603	8-729-230-49	TRANSISTOR 2SC2712-YG	
Q1604	8-729-230-49	TRANSISTOR 2SC2712-YG	
Q1609	8-729-902-96	TRANSISTOR FMS1	
Q1610	8-729-902-96	TRANSISTOR FMS1	
Q1611	8-729-902-96	TRANSISTOR FMS1	
Q1709	8-729-230-49	TRANSISTOR 2SC2712-YG	
Q1710	8-729-230-49	TRANSISTOR 2SC2712-YG	
Q1711	8-729-230-49	TRANSISTOR 2SC2712-YG	
Q1800	1-801-806-11	TRANSISTOR DTC144EKA-T146	
Q1801	8-729-230-49	TRANSISTOR 2SC2712-YG	
Q1802	8-729-216-22	TRANSISTOR 2SA1162-G	
Q1803	8-729-230-49	TRANSISTOR 2SC2712-YG	
Q1804	8-729-216-22	TRANSISTOR 2SA1162-G	
Q1806	8-729-230-49	TRANSISTOR 2SC2712-YG	
Q1807	8-729-230-49	TRANSISTOR 2SC2712-YG	
Q1808	8-729-230-49	TRANSISTOR 2SC2712-YG	
Q1809	8-729-230-49	TRANSISTOR 2SC2712-YG	
Q1811	8-729-216-22	TRANSISTOR 2SA1162-G	
Q1812	8-729-216-22	TRANSISTOR 2SA1162-G	
Q1813	8-729-216-22	TRANSISTOR 2SA1162-G	
Q1814	1-801-806-11	TRANSISTOR DTC144EKA-T146	
Q1815	8-729-216-22	TRANSISTOR 2SA1162-G	
Q2100	1-801-806-11	TRANSISTOR DTC144EKA-T146	
Q2101	8-729-900-53	TRANSISTOR DTC114EK	

<RESISTOR>

R1	1-216-001-00	RES,CHIP	10	5%	1/10W
R2	1-216-001-00	RES,CHIP	10	5%	1/10W
R3	1-216-631-11	METAL CHIP	150	0.50%	1/10W
R4	1-216-631-11	METAL CHIP	150	0.50%	1/10W
R5	1-216-001-00	RES,CHIP	10	5%	1/10W
R6	1-216-089-91	RES,CHIP	47K	5%	1/10W
R7	1-216-089-91	RES,CHIP	47K	5%	1/10W
R8	1-216-631-11	METAL CHIP	150	0.50%	1/10W
R9	1-216-631-11	METAL CHIP	150	0.50%	1/10W
R10	1-216-089-91	RES,CHIP	47K	5%	1/10W
R11	1-216-001-00	RES,CHIP	10	5%	1/10W
R12	1-216-631-11	METAL CHIP	150	0.50%	1/10W
R13	1-216-631-11	METAL CHIP	150	0.50%	1/10W
R14	1-216-001-00	RES,CHIP	10	5%	1/10W

BA

Ref.No.	Part No.	Description			Remark
R15	1-216-001-00	RES,CHIP	10	5%	1/10W
R16	1-216-089-91	RES,CHIP	47K	5%	1/10W
R17	1-216-089-91	RES,CHIP	47K	5%	1/10W
R18	1-216-631-11	METAL CHIP	150	0.50%	1/10W
R19	1-216-631-11	METAL CHIP	150	0.50%	1/10W
R20	1-216-001-00	RES,CHIP	10	5%	1/10W
R21	1-216-001-00	RES,CHIP	10	5%	1/10W
R22	1-216-001-00	RES,CHIP	10	5%	1/10W
R23	1-216-089-91	RES,CHIP	47K	5%	1/10W
R24	1-216-089-91	RES,CHIP	47K	5%	1/10W
R25	1-216-097-91	RES,CHIP	100K	5%	1/10W
R26	1-216-631-11	METAL CHIP	150	0.50%	1/10W
R27	1-216-631-11	METAL CHIP	150	0.50%	1/10W
R28	1-216-073-00	RES,CHIP	10K	5%	1/10W
R29	1-216-025-91	RES,CHIP	100	5%	1/10W
R30	1-216-631-11	METAL CHIP	150	0.50%	1/10W
R31	1-216-631-11	METAL CHIP	150	0.50%	1/10W
R32	1-216-097-91	RES,CHIP	100K	5%	1/10W
R33	1-216-073-00	RES,CHIP	10K	5%	1/10W
R34	1-216-041-00	RES,CHIP	470	5%	1/10W
R35	1-216-089-91	RES,CHIP	47K	5%	1/10W
R36	1-216-635-11	METAL CHIP	220	0.50%	1/10W
R37	1-216-631-11	METAL CHIP	150	0.50%	1/10W
R38	1-216-073-00	RES,CHIP	10K	5%	1/10W
R39	1-216-631-11	METAL CHIP	150	0.50%	1/10W
R40	1-216-089-91	RES,CHIP	47K	5%	1/10W
R41	1-216-001-00	RES,CHIP	10	5%	1/10W
R42	1-216-095-00	RES,CHIP	82K	5%	1/10W
R43	1-220-259-11	RES,CHIP	150	5%	1/4W
R44	1-216-295-91	SHORT 0			
R45	1-216-635-11	METAL CHIP	220	0.50%	1/10W
R46	1-220-259-11	RES,CHIP	150	5%	1/4W
R47	1-216-025-91	RES,CHIP	100	5%	1/10W
R48	1-216-635-11	METAL CHIP	220	0.50%	1/10W
R49	1-216-073-00	RES,CHIP	10K	5%	1/10W
R50	1-216-097-91	RES,CHIP	100K	5%	1/10W
R51	1-216-049-91	RES,CHIP	1K	5%	1/10W
R52	1-216-049-91	RES,CHIP	1K	5%	1/10W
R53	1-216-001-00	RES,CHIP	10	5%	1/10W
R54	1-216-631-11	METAL CHIP	150	0.50%	1/10W
R56	1-216-089-91	RES,CHIP	47K	5%	1/10W
R57	1-216-631-11	METAL CHIP	150	0.50%	1/10W
R58	1-216-049-91	RES,CHIP	1K	5%	1/10W
R59	1-220-259-11	RES,CHIP	150	5%	1/4W
R60	1-220-259-11	RES,CHIP	150	5%	1/4W
R61	1-216-295-91	SHORT 0			
R62	1-216-635-11	METAL CHIP	220	0.50%	1/10W
R63	1-216-001-00	RES,CHIP	10	5%	1/10W
R64	1-216-635-11	METAL CHIP	220	0.50%	1/10W
R65	1-218-767-11	METAL CHIP	430K	0.50%	1/10W
R66	1-216-631-11	METAL CHIP	150	0.50%	1/10W
R67	1-216-631-11	METAL CHIP	150	0.50%	1/10W
R68	1-216-049-91	RES,CHIP	1K	5%	1/10W
R69	1-220-259-11	RES,CHIP	150	5%	1/4W
R70	1-220-259-11	RES,CHIP	150	5%	1/4W
R71	1-216-295-91	SHORT 0			
R72	1-216-635-11	METAL CHIP	220	0.50%	1/10W
R73	1-216-013-00	RES,CHIP	33	5%	1/10W
R74	1-216-025-91	RES,CHIP	100	5%	1/10W
R75	1-216-669-11	METAL CHIP	5.6K	0.50%	1/10W
R76	1-216-025-91	RES,CHIP	100	5%	1/10W
R77	1-216-041-00	RES,CHIP	470	5%	1/10W
R78	1-216-065-91	RES,CHIP	4.7K	5%	1/10W
R79	1-216-013-00	RES,CHIP	33	5%	1/10W
R80	1-216-013-00	RES,CHIP	33	5%	1/10W
R81	1-216-025-91	RES,CHIP	100	5%	1/10W
R82	1-216-073-00	RES,CHIP	10K	5%	1/10W
R83	1-216-049-91	RES,CHIP	1K	5%	1/10W
R84	1-216-071-00	RES,CHIP	8.2K	5%	1/10W
R85	1-216-025-91	RES,CHIP	100	5%	1/10W
R86	1-216-025-91	RES,CHIP	100	5%	1/10W
R87	1-216-073-00	RES,CHIP	10K	5%	1/10W
R88	1-216-089-91	RES,CHIP	47K	5%	1/10W
R89	1-216-025-91	RES,CHIP	100	5%	1/10W
R90	1-216-065-91	RES,CHIP	4.7K	5%	1/10W
R91	1-216-645-11	METAL CHIP	560	0.50%	1/10W
R92	1-216-073-00	RES,CHIP	10K	5%	1/10W
R93	1-216-657-11	METAL CHIP	1.8K	0.50%	1/10W
R95	1-216-025-91	RES,CHIP	100	5%	1/10W
R96	1-216-065-91	RES,CHIP	4.7K	5%	1/10W
R97	1-216-049-91	RES,CHIP	1K	5%	1/10W
R98	1-216-049-91	RES,CHIP	1K	5%	1/10W
R99	1-216-025-91	RES,CHIP	100	5%	1/10W
R100	1-216-013-00	RES,CHIP	33	5%	1/10W
R101	1-216-025-91	RES,CHIP	100	5%	1/10W
R200	1-216-017-91	RES,CHIP	47	5%	1/10W
R201	1-216-049-91	RES,CHIP	1K	5%	1/10W
R202	1-216-057-00	RES,CHIP	2.2K	5%	1/10W
R203	1-216-017-91	RES,CHIP	47	5%	1/10W
R204	1-216-017-91	RES,CHIP	47	5%	1/10W
R205	1-216-661-11	METAL CHIP	2.7K	0.50%	1/10W
R206	1-216-017-91	RES,CHIP	47	5%	1/10W
R207	1-216-049-91	RES,CHIP	1K	5%	1/10W
R208	1-216-025-91	RES,CHIP	100	5%	1/10W
R209	1-216-121-91	RES,CHIP	1M	5%	1/10W
R210	1-216-017-91	RES,CHIP	47	5%	1/10W
R211	1-216-061-00	RES,CHIP	3.3K	5%	1/10W
R212	1-216-017-91	RES,CHIP	47	5%	1/10W
R213	1-216-295-91	SHORT 0			
R214	1-216-089-91	RES,CHIP	47K	5%	1/10W
R215	1-216-025-91	RES,CHIP	100	5%	1/10W
R216	1-216-017-91	RES,CHIP	47	5%	1/10W
R217	1-216-049-91	RES,CHIP	1K	5%	1/10W
R218	1-216-017-91	RES,CHIP	47	5%	1/10W
R219	1-216-661-11	METAL CHIP	2.7K	0.50%	1/10W
R220	1-216-017-91	RES,CHIP	47	5%	1/10W
R221	1-216-025-91	RES,CHIP	100	5%	1/10W
R222	1-216-049-91	RES,CHIP	1K	5%	1/10W
R223	1-216-017-91	RES,CHIP	47	5%	1/10W
R224	1-216-121-91	RES,CHIP	1M	5%	1/10W
R225	1-216-061-00	RES,CHIP	3.3K	5%	1/10W
R226	1-216-017-91	RES,CHIP	47	5%	1/10W
R227	1-216-089-91	RES,CHIP	47K	5%	1/10W
R228	1-216-295-91	SHORT 0			
R229	1-216-025-91	RES,CHIP	100	5%	1/10W
R230	1-216-017-91	RES,CHIP	47	5%	1/10W

Ref.No.	Part No.	Description			Remark
R231	1-216-661-11	METAL CHIP	2.7K	0.50%	1/10W
R232	1-216-017-91	RES,CHIP	47	5%	1/10W
R233	1-216-025-91	RES,CHIP	100	5%	1/10W
R234	1-216-017-91	RES,CHIP	47	5%	1/10W
R235	1-216-049-91	RES,CHIP	1K	5%	1/10W
R236	1-216-017-91	RES,CHIP	47	5%	1/10W
R237	1-216-013-00	RES,CHIP	33	5%	1/10W
R238	1-216-049-91	RES,CHIP	1K	5%	1/10W
R239	1-216-121-91	RES,CHIP	1M	5%	1/10W
R240	1-216-089-91	RES,CHIP	47K	5%	1/10W
R241	1-216-061-00	RES,CHIP	3.3K	5%	1/10W
R242	1-216-017-91	RES,CHIP	47	5%	1/10W
R243	1-216-295-91	SHORT 0			
R244	1-216-017-91	RES,CHIP	47	5%	1/10W
R245	1-216-025-91	RES,CHIP	100	5%	1/10W
R246	1-216-067-00	RES,CHIP	5.6K	5%	1/10W
R247	1-216-063-91	RES,CHIP	3.9K	5%	1/10W
R248	1-216-039-00	RES,CHIP	390	5%	1/10W
R249	1-216-017-91	RES,CHIP	47	5%	1/10W
R250	1-216-013-00	RES,CHIP	33	5%	1/10W
R251	1-216-017-91	RES,CHIP	47	5%	1/10W
R252	1-216-057-00	RES,CHIP	2.2K	5%	1/10W
R253	1-216-049-91	RES,CHIP	1K	5%	1/10W
R254	1-216-065-91	RES,CHIP	4.7K	5%	1/10W
R255	1-216-065-91	RES,CHIP	4.7K	5%	1/10W
R256	1-216-017-91	RES,CHIP	47	5%	1/10W
R257	1-216-017-91	RES,CHIP	47	5%	1/10W
R258	1-216-017-91	RES,CHIP	47	5%	1/10W
R259	1-216-017-91	RES,CHIP	47	5%	1/10W
R260	1-216-017-91	RES,CHIP	47	5%	1/10W
R261	1-216-057-00	RES,CHIP	2.2K	5%	1/10W
R262	1-216-057-00	RES,CHIP	2.2K	5%	1/10W
R263	1-216-057-00	RES,CHIP	2.2K	5%	1/10W
R273	1-216-085-00	RES,CHIP	33K	5%	1/10W
R274	1-216-085-00	RES,CHIP	33K	5%	1/10W
R275	1-216-085-00	RES,CHIP	33K	5%	1/10W
R276	1-216-295-91	SHORT 0			
R277	1-216-295-91	SHORT 0			
R278	1-216-295-91	SHORT 0			
R391	1-216-001-00	RES,CHIP	10	5%	1/10W
R392	1-216-659-11	METAL CHIP	2.2K	0.50%	1/10W
R393	1-216-001-00	RES,CHIP	10	5%	1/10W
R394	1-216-659-11	METAL CHIP	2.2K	0.50%	1/10W
R395	1-216-001-00	RES,CHIP	10	5%	1/10W
R396	1-216-659-11	METAL CHIP	2.2K	0.50%	1/10W
R400	1-216-025-91	RES,CHIP	100	5%	1/10W
R401	1-216-017-91	RES,CHIP	47	5%	1/10W
R402	1-216-025-91	RES,CHIP	100	5%	1/10W
R403	1-216-017-91	RES,CHIP	47	5%	1/10W
R404	1-216-025-91	RES,CHIP	100	5%	1/10W
R405	1-216-017-91	RES,CHIP	47	5%	1/10W
R406	1-216-025-91	RES,CHIP	100	5%	1/10W
R408	1-216-017-91	RES,CHIP	47	5%	1/10W
R409	1-216-045-00	RES,CHIP	680	5%	1/10W
R411	1-216-045-00	RES,CHIP	680	5%	1/10W
R413	1-216-045-00	RES,CHIP	680	5%	1/10W
R416	1-216-651-11	METAL CHIP	1K	0.50%	1/10W
R417	1-216-651-11	METAL CHIP	1K	0.50%	1/10W
R418	1-216-651-11	METAL CHIP	1K	0.50%	1/10W
R419	1-216-045-00	RES,CHIP	680	5%	1/10W
R420	1-216-045-00	RES,CHIP	680	5%	1/10W
R423	1-216-045-00	RES,CHIP	680	5%	1/10W
R424	1-216-045-00	RES,CHIP	680	5%	1/10W
R426	1-216-045-00	RES,CHIP	680	5%	1/10W
R427	1-216-017-91	RES,CHIP	47	5%	1/10W
R430	1-216-017-91	RES,CHIP	47	5%	1/10W
R431	1-216-017-91	RES,CHIP	47	5%	1/10W
R432	1-216-017-91	RES,CHIP	47	5%	1/10W
R433	1-216-017-91	RES,CHIP	47	5%	1/10W
R435	1-216-017-91	RES,CHIP	47	5%	1/10W
R436	1-216-017-91	RES,CHIP	47	5%	1/10W
R437	1-216-017-91	RES,CHIP	47	5%	1/10W
R438	1-216-017-91	RES,CHIP	47	5%	1/10W
R439	1-216-017-91	RES,CHIP	47	5%	1/10W
R440	1-216-017-91	RES,CHIP	47	5%	1/10W
R441	1-216-017-91	RES,CHIP	47	5%	1/10W
R442	1-216-017-91	RES,CHIP	47	5%	1/10W
R443	1-216-647-11	METAL CHIP	680	0.50%	1/10W
R444	1-216-647-11	METAL CHIP	680	0.50%	1/10W
R445	1-216-691-11	METAL CHIP	47K	0.50%	1/10W
R446	1-216-699-11	METAL CHIP	100K	0.50%	1/10W
R447	1-216-647-11	METAL CHIP	680	0.50%	1/10W
R448	1-216-647-11	METAL CHIP	680	0.50%	1/10W
R449	1-216-061-00	RES,CHIP	3.3K	5%	1/10W
R450	1-216-077-00	RES,CHIP	15K	5%	1/10W
R451	1-216-017-91	RES,CHIP	47	5%	1/10W
R452	1-216-049-91	RES,CHIP	1K	5%	1/10W
R453	1-216-049-91	RES,CHIP	1K	5%	1/10W
R454	1-216-049-91	RES,CHIP	1K	5%	1/10W
R455	1-216-049-91	RES,CHIP	1K	5%	1/10W
R483	1-216-651-11	METAL CHIP	1K	0.50%	1/10W
R484	1-216-043-91	RES,CHIP	560	5%	1/10W
R485	1-216-624-11	METAL CHIP	75	0.50%	1/10W
R486	1-216-017-91	RES,CHIP	47	5%	1/10W
R487	1-216-659-11	METAL CHIP	2.2K	0.50%	1/10W
R488	1-216-663-11	METAL CHIP	3.3K	0.50%	1/10W
R489	1-216-629-11	METAL CHIP	120	0.50%	1/10W
R491	1-216-295-91	SHORT 0			
R492	1-216-089-91	RES,CHIP	47K	5%	1/10W
R493	1-216-647-11	METAL CHIP	680	0.50%	1/10W
R500	1-216-295-91	SHORT 0			
R501	1-216-017-91	RES,CHIP	47	5%	1/10W
R502	1-216-049-91	RES,CHIP	1K	5%	1/10W
R503	1-216-049-91	RES,CHIP	1K	5%	1/10W
R504	1-216-049-91	RES,CHIP	1K	5%	1/10W
R505	1-216-049-91	RES,CHIP	1K	5%	1/10W
R533	1-216-651-11	METAL CHIP	1K	0.50%	1/10W
R534	1-216-043-91	RES,CHIP	560	5%	1/10W
R535	1-216-624-11	METAL CHIP	75	0.50%	1/10W
R536	1-216-025-91	RES,CHIP	100	5%	1/10W
R538	1-216-025-91	RES,CHIP	100	5%	1/10W
R539	1-216-037-00	RES,CHIP	330	5%	1/10W
R540	1-216-025-91	RES,CHIP	100	5%	1/10W
R541	1-216-017-91	RES,CHIP	47	5%	1/10W
R542	1-216-025-91	RES,CHIP	100	5%	1/10W
R543	1-216-037-00	RES,CHIP	330	5%	1/10W
R544	1-216-025-91	RES,CHIP	100	5%	1/10W

BA

Ref.No.	Part No.	Description			Remark
R545	1-216-017-91	RES,CHIP	47	5%	1/10W
R547	1-216-017-91	RES,CHIP	47	5%	1/10W
R548	1-216-659-11	METAL CHIP	2.2K	0.50%	1/10W
R549	1-216-663-11	METAL CHIP	3.3K	0.50%	1/10W
R550	1-216-629-11	METAL CHIP	120	0.50%	1/10W
R551	1-216-017-91	RES,CHIP	47	5%	1/10W
R552	1-216-049-91	RES,CHIP	1K	5%	1/10W
R553	1-216-049-91	RES,CHIP	1K	5%	1/10W
R554	1-216-049-91	RES,CHIP	1K	5%	1/10W
R555	1-216-049-91	RES,CHIP	1K	5%	1/10W
R583	1-216-651-11	METAL CHIP	1K	0.50%	1/10W
R584	1-216-043-91	RES,CHIP	560	5%	1/10W
R585	1-216-624-11	METAL CHIP	75	0.50%	1/10W
R586	1-216-025-91	RES,CHIP	100	5%	1/10W
R587	1-216-295-91	SHORT 0			
R588	1-216-025-91	RES,CHIP	100	5%	1/10W
R589	1-216-037-00	RES,CHIP	330	5%	1/10W
R590	1-216-025-91	RES,CHIP	100	5%	1/10W
R591	1-216-049-91	RES,CHIP	1K	5%	1/10W
R592	1-216-025-91	RES,CHIP	100	5%	1/10W
R593	1-216-017-91	RES,CHIP	47	5%	1/10W
R594	1-216-647-11	METAL CHIP	680	0.50%	1/10W
R595	1-216-629-11	METAL CHIP	120	0.50%	1/10W
R597	1-216-017-91	RES,CHIP	47	5%	1/10W
R598	1-216-659-11	METAL CHIP	2.2K	0.50%	1/10W
R599	1-216-663-11	METAL CHIP	3.3K	0.50%	1/10W
R600	1-216-699-11	METAL CHIP	100K	0.50%	1/10W
R601	1-216-699-11	METAL CHIP	100K	0.50%	1/10W
R602	1-216-699-11	METAL CHIP	100K	0.50%	1/10W
R603	1-216-699-11	METAL CHIP	100K	0.50%	1/10W
R604	1-216-699-11	METAL CHIP	100K	0.50%	1/10W
R605	1-216-699-11	METAL CHIP	100K	0.50%	1/10W
R606	1-216-693-11	METAL CHIP	56K	0.50%	1/10W
R607	1-216-663-11	METAL CHIP	3.3K	0.50%	1/10W
R608	1-216-695-11	METAL CHIP	68K	0.50%	1/10W
R609	1-216-049-91	RES,CHIP	1K	5%	1/10W
R610	1-216-693-11	METAL CHIP	56K	0.50%	1/10W
R611	1-216-663-11	METAL CHIP	3.3K	0.50%	1/10W
R612	1-216-695-11	METAL CHIP	68K	0.50%	1/10W
R613	1-216-693-11	METAL CHIP	56K	0.50%	1/10W
R614	1-216-663-11	METAL CHIP	3.3K	0.50%	1/10W
R615	1-216-695-11	METAL CHIP	68K	0.50%	1/10W
R617	1-216-687-11	METAL CHIP	33K	0.50%	1/10W
R619	1-216-687-11	METAL CHIP	33K	0.50%	1/10W
R621	1-216-687-11	METAL CHIP	33K	0.50%	1/10W
R629	1-216-699-11	METAL CHIP	100K	0.50%	1/10W
R631	1-216-699-11	METAL CHIP	100K	0.50%	1/10W
R633	1-216-699-11	METAL CHIP	100K	0.50%	1/10W
R634	1-216-049-91	RES,CHIP	1K	5%	1/10W
R635	1-216-689-11	METAL CHIP	39K	0.50%	1/10W
R636	1-216-695-11	METAL CHIP	68K	0.50%	1/10W
R637	1-216-695-11	METAL CHIP	68K	0.50%	1/10W
R638	1-216-689-11	METAL CHIP	39K	0.50%	1/10W
R639	1-216-679-11	METAL CHIP	15K	0.50%	1/10W
R640	1-216-695-11	METAL CHIP	68K	0.50%	1/10W
R641	1-216-689-11	METAL CHIP	39K	0.50%	1/10W
R642	1-216-679-11	METAL CHIP	15K	0.50%	1/10W
R643	1-216-679-11	METAL CHIP	15K	0.50%	1/10W
R644	1-218-754-11	METAL CHIP	120K	0.50%	1/10W
R645	1-218-754-11	METAL CHIP	120K	0.50%	1/10W
R646	1-218-754-11	METAL CHIP	120K	0.50%	1/10W
R647	1-216-675-11	METAL CHIP	10K	0.50%	1/10W
R648	1-216-675-11	METAL CHIP	10K	0.50%	1/10W
R649	1-216-675-11	METAL CHIP	10K	0.50%	1/10W
R650	1-216-025-91	RES,CHIP	100	5%	1/10W
R651	1-216-675-11	METAL CHIP	10K	0.50%	1/10W
R652	1-216-691-11	METAL CHIP	47K	0.50%	1/10W
R653	1-216-025-91	RES,CHIP	100	5%	1/10W
R654	1-216-675-11	METAL CHIP	10K	0.50%	1/10W
R655	1-216-691-11	METAL CHIP	47K	0.50%	1/10W
R656	1-216-025-91	RES,CHIP	100	5%	1/10W
R657	1-216-675-11	METAL CHIP	10K	0.50%	1/10W
R658	1-216-691-11	METAL CHIP	47K	0.50%	1/10W
R659	1-216-657-11	METAL CHIP	1.8K	0.50%	1/10W
R660	1-216-675-11	METAL CHIP	10K	0.50%	1/10W
R661	1-216-657-11	METAL CHIP	1.8K	0.50%	1/10W
R662	1-216-675-11	METAL CHIP	10K	0.50%	1/10W
R663	1-216-657-11	METAL CHIP	1.8K	0.50%	1/10W
R664	1-216-675-11	METAL CHIP	10K	0.50%	1/10W
R665	1-216-675-11	METAL CHIP	10K	0.50%	1/10W
R666	1-216-675-11	METAL CHIP	10K	0.50%	1/10W
R667	1-216-671-11	METAL CHIP	6.8K	0.50%	1/10W
R668	1-216-675-11	METAL CHIP	10K	0.50%	1/10W
R669	1-216-671-11	METAL CHIP	6.8K	0.50%	1/10W
R670	1-216-671-11	METAL CHIP	6.8K	0.50%	1/10W
R671	1-216-671-11	METAL CHIP	6.8K	0.50%	1/10W
R672	1-216-655-11	METAL CHIP	1.5K	0.50%	1/10W
R673	1-216-663-11	METAL CHIP	3.3K	0.50%	1/10W
R674	1-216-671-11	METAL CHIP	6.8K	0.50%	1/10W
R675	1-216-655-11	METAL CHIP	1.5K	0.50%	1/10W
R676	1-216-663-11	METAL CHIP	3.3K	0.50%	1/10W
R680	1-216-671-11	METAL CHIP	6.8K	0.50%	1/10W
R681	1-216-655-11	METAL CHIP	1.5K	0.50%	1/10W
R682	1-216-663-11	METAL CHIP	3.3K	0.50%	1/10W
R689	1-216-049-91	RES,CHIP	1K	5%	1/10W
R690	1-216-651-11	METAL CHIP	1K	0.50%	1/10W
R691	1-216-025-91	RES,CHIP	100	5%	1/10W
R692	1-216-025-91	RES,CHIP	100	5%	1/10W
R693	1-216-025-91	RES,CHIP	100	5%	1/10W
R696	1-216-025-91	RES,CHIP	100	5%	1/10W
R698	1-216-295-91	SHORT 0			
R699	1-216-025-91	RES,CHIP	100	5%	1/10W
R700	1-216-295-91	SHORT 0			
R701	1-216-025-91	RES,CHIP	100	5%	1/10W
R702	1-216-295-91	SHORT 0			
R703	1-216-073-00	RES,CHIP	10K	5%	1/10W
R704	1-216-097-91	RES,CHIP	100K	5%	1/10W
R705	1-216-033-00	RES,CHIP	220	5%	1/10W
R706	1-216-667-11	METAL CHIP	4.7K	0.50%	1/10W
R707	1-216-025-91	RES,CHIP	100	5%	1/10W
R708	1-216-025-91	RES,CHIP	100	5%	1/10W
R709	1-216-073-00	RES,CHIP	10K	5%	1/10W
R710	1-216-073-00	RES,CHIP	10K	5%	1/10W
R711	1-216-025-91	RES,CHIP	100	5%	1/10W
R712	1-216-025-91	RES,CHIP	100	5%	1/10W
R713	1-216-025-91	RES,CHIP	100	5%	1/10W
R714	1-216-025-91	RES,CHIP	100	5%	1/10W

Ref.No.	Part No.	Description			Remark
R715	1-216-025-91	RES,CHIP	100	5%	1/10W
R716	1-216-025-91	RES,CHIP	100	5%	1/10W
R717	1-216-025-91	RES,CHIP	100	5%	1/10W
R718	1-216-699-11	METAL CHIP	100K	0.50%	1/10W
R719	1-216-699-11	METAL CHIP	100K	0.50%	1/10W
R720	1-216-699-11	METAL CHIP	100K	0.50%	1/10W
R800	1-216-677-11	METAL CHIP	12K	0.50%	1/10W
R801	1-216-025-91	RES,CHIP	100	5%	1/10W
R802	1-216-017-91	RES,CHIP	47	5%	1/10W
R803	1-216-661-11	METAL CHIP	2.7K	0.50%	1/10W
R804	1-216-673-11	METAL CHIP	8.2K	0.50%	1/10W
R805	1-216-683-11	METAL CHIP	22K	0.50%	1/10W
R806	1-216-679-11	METAL CHIP	15K	0.50%	1/10W
R807	1-216-673-11	METAL CHIP	8.2K	0.50%	1/10W
R809	1-216-683-11	METAL CHIP	22K	0.50%	1/10W
R810	1-216-675-11	METAL CHIP	10K	0.50%	1/10W
R811	1-216-661-11	METAL CHIP	2.7K	0.50%	1/10W
R812	1-216-673-11	METAL CHIP	8.2K	0.50%	1/10W
R813	1-216-025-91	RES,CHIP	100	5%	1/10W
R814	1-216-025-91	RES,CHIP	100	5%	1/10W
R815	1-216-025-91	RES,CHIP	100	5%	1/10W
R816	1-216-673-11	METAL CHIP	8.2K	0.50%	1/10W
R817	1-216-669-11	METAL CHIP	5.6K	0.50%	1/10W
R818	1-216-663-11	METAL CHIP	3.3K	0.50%	1/10W
R819	1-218-760-11	METAL CHIP	220K	0.50%	1/10W
R820	1-218-760-11	METAL CHIP	220K	0.50%	1/10W
R821	1-218-760-11	METAL CHIP	220K	0.50%	1/10W
R822	1-216-697-91	METAL CHIP	82K	0.50%	1/10W
R823	1-216-673-11	METAL CHIP	8.2K	0.50%	1/10W
R824	1-216-675-11	METAL CHIP	10K	0.50%	1/10W
R825	1-216-685-11	METAL CHIP	27K	0.50%	1/10W
R826	1-216-679-11	METAL CHIP	15K	0.50%	1/10W
R827	1-216-671-11	METAL CHIP	6.8K	0.50%	1/10W
R828	1-216-673-11	METAL CHIP	8.2K	0.50%	1/10W
R829	1-216-675-11	METAL CHIP	10K	0.50%	1/10W
R830	1-216-025-91	RES,CHIP	100	5%	1/10W
R831	1-216-025-91	RES,CHIP	100	5%	1/10W
R832	1-216-675-11	METAL CHIP	10K	0.50%	1/10W
R833	1-216-675-11	METAL CHIP	10K	0.50%	1/10W
R834	1-216-073-00	RES,CHIP	10K	5%	1/10W
R835	1-216-659-11	METAL CHIP	2.2K	0.50%	1/10W
R836	1-216-677-11	METAL CHIP	12K	0.50%	1/10W
R837	1-216-677-11	METAL CHIP	12K	0.50%	1/10W
R838	1-216-001-00	RES,CHIP	10	5%	1/10W
R839	1-218-760-11	METAL CHIP	220K	0.50%	1/10W
R840	1-216-077-00	RES,CHIP	15K	5%	1/10W
R841	1-218-760-11	METAL CHIP	220K	0.50%	1/10W
R842	1-216-025-91	RES,CHIP	100	5%	1/10W
R843	1-218-758-11	METAL CHIP	180K	0.50%	1/10W
R844	1-218-764-11	METAL CHIP	330K	0.50%	1/10W
R845	1-216-691-11	METAL CHIP	47K	0.50%	1/10W
R846	1-218-760-11	METAL CHIP	220K	0.50%	1/10W
R847	1-218-760-11	METAL CHIP	220K	0.50%	1/10W
R848	1-216-673-11	METAL CHIP	8.2K	0.50%	1/10W
R849	1-216-697-91	METAL CHIP	82K	0.50%	1/10W
R850	1-216-671-11	METAL CHIP	6.8K	0.50%	1/10W
R851	1-216-035-00	RES,CHIP	270	5%	1/10W
R852	1-216-073-00	RES,CHIP	10K	5%	1/10W
R853	1-216-663-11	METAL CHIP	3.3K	0.50%	1/10W
R854	1-216-651-11	METAL CHIP	1K	0.50%	1/10W
R855	1-216-683-11	METAL CHIP	22K	0.50%	1/10W
R856	1-216-683-11	METAL CHIP	22K	0.50%	1/10W
R857	1-216-683-11	METAL CHIP	22K	0.50%	1/10W
R858	1-216-677-11	METAL CHIP	12K	0.50%	1/10W
R859	1-216-691-11	METAL CHIP	47K	0.50%	1/10W
R860	1-216-659-11	METAL CHIP	2.2K	0.50%	1/10W
R861	1-216-675-11	METAL CHIP	10K	0.50%	1/10W
R862	1-216-677-11	METAL CHIP	12K	0.50%	1/10W
R863	1-216-677-11	METAL CHIP	12K	0.50%	1/10W
R864	1-216-691-11	METAL CHIP	47K	0.50%	1/10W
R866	1-216-675-11	METAL CHIP	10K	0.50%	1/10W
R867	1-216-061-00	RES,CHIP	3.3K	5%	1/10W
R868	1-216-057-00	RES,CHIP	2.2K	5%	1/10W
R869	1-216-001-00	RES,CHIP	10	5%	1/10W
R870	1-216-603-11	METAL CHIP	10	0.50%	1/10W
R871	1-216-667-11	METAL CHIP	4.7K	0.50%	1/10W
R872	1-216-667-11	METAL CHIP	4.7K	0.50%	1/10W
R873	1-216-665-11	METAL CHIP	3.9K	0.50%	1/10W
R874	1-216-675-11	METAL CHIP	10K	0.50%	1/10W
R875	1-216-675-11	METAL CHIP	10K	0.50%	1/10W
R876	1-216-677-11	METAL CHIP	12K	0.50%	1/10W
R877	1-216-683-11	METAL CHIP	22K	0.50%	1/10W
R878	1-216-025-91	RES,CHIP	100	5%	1/10W
R879	1-216-651-11	METAL CHIP	1K	0.50%	1/10W
R880	1-216-001-00	RES,CHIP	10	5%	1/10W
R881	1-218-760-11	METAL CHIP	220K	0.50%	1/10W
R882	1-216-073-00	RES,CHIP	10K	5%	1/10W
R883	1-216-035-00	RES,CHIP	270	5%	1/10W
R884	1-216-683-11	METAL CHIP	22K	0.50%	1/10W
R885	1-218-758-11	METAL CHIP	180K	0.50%	1/10W
R886	1-218-764-11	METAL CHIP	330K	0.50%	1/10W
R887	1-216-691-11	METAL CHIP	47K	0.50%	1/10W
R888	1-216-697-91	METAL CHIP	82K	0.50%	1/10W
R889	1-216-073-00	RES,CHIP	10K	5%	1/10W
R890	1-218-760-11	METAL CHIP	220K	0.50%	1/10W
R891	1-216-035-00	RES,CHIP	270	5%	1/10W
R892	1-216-683-11	METAL CHIP	22K	0.50%	1/10W
R893	1-218-758-11	METAL CHIP	180K	0.50%	1/10W
R894	1-218-764-11	METAL CHIP	330K	0.50%	1/10W
R895	1-216-691-11	METAL CHIP	47K	0.50%	1/10W
R896	1-216-691-11	METAL CHIP	47K	0.50%	1/10W
R897	1-216-691-11	METAL CHIP	47K	0.50%	1/10W
R898	1-216-691-11	METAL CHIP	47K	0.50%	1/10W
R901	1-216-025-91	RES,CHIP	100	5%	1/10W
R902	1-216-025-91	RES,CHIP	100	5%	1/10W
R903	1-216-025-91	RES,CHIP	100	5%	1/10W
R1001	1-216-017-91	RES,CHIP	47	5%	1/10W
R1002	1-216-627-11	METAL CHIP	100	0.50%	1/10W
R1003	1-216-057-00	RES,CHIP	2.2K	5%	1/10W
R1004	1-216-055-00	RES,CHIP	1.8K	5%	1/10W
R1005	1-216-055-00	RES,CHIP	1.8K	5%	1/10W
R1006	1-216-065-91	RES,CHIP	4.7K	5%	1/10W
R1007	1-216-073-00	RES,CHIP	10K	5%	1/10W
R1008	1-216-057-00	RES,CHIP	2.2K	5%	1/10W
R1009	1-216-025-91	RES,CHIP	100	5%	1/10W
R1010	1-216-053-00	RES,CHIP	1.5K	5%	1/10W

BA

Ref.No.	Part No.	Description			Remark
R1011	1-216-651-11	METAL CHIP	1K	0.50%	1/10W
R1013	1-216-017-91	RES,CHIP	47	5%	1/10W
R1014	1-216-651-11	METAL CHIP	1K	0.50%	1/10W
R1015	1-216-025-91	RES,CHIP	100	5%	1/10W
R1016	1-216-057-00	RES,CHIP	2.2K	5%	1/10W
R1017	1-216-065-91	RES,CHIP	4.7K	5%	1/10W
R1018	1-216-651-11	METAL CHIP	1K	0.50%	1/10W
R1019	1-216-025-91	RES,CHIP	100	5%	1/10W
R1020	1-216-057-00	RES,CHIP	2.2K	5%	1/10W
R1021	1-216-065-91	RES,CHIP	4.7K	5%	1/10W
R1023	1-216-057-00	RES,CHIP	2.2K	5%	1/10W
R1024	1-216-025-91	RES,CHIP	100	5%	1/10W
R1025	1-216-051-00	RES,CHIP	1.2K	5%	1/10W
R1026	1-216-025-91	RES,CHIP	100	5%	1/10W
R1027	1-216-017-91	RES,CHIP	47	5%	1/10W
R1028	1-216-057-00	RES,CHIP	2.2K	5%	1/10W
R1029	1-216-025-91	RES,CHIP	100	5%	1/10W
R1030	1-216-065-91	RES,CHIP	4.7K	5%	1/10W
R1031	1-216-057-00	RES,CHIP	2.2K	5%	1/10W
R1032	1-216-065-91	RES,CHIP	4.7K	5%	1/10W
R1033	1-216-049-91	RES,CHIP	1K	5%	1/10W
R1034	1-216-049-91	RES,CHIP	1K	5%	1/10W
R1035	1-216-065-91	RES,CHIP	4.7K	5%	1/10W
R1036	1-216-049-91	RES,CHIP	1K	5%	1/10W
R1037	1-216-067-00	RES,CHIP	5.6K	5%	1/10W
R1038	1-216-031-00	RES,CHIP	180	5%	1/10W
R1039	1-216-651-11	METAL CHIP	1K	0.50%	1/10W
R1040	1-216-025-91	RES,CHIP	100	5%	1/10W
R1041	1-216-651-11	METAL CHIP	1K	0.50%	1/10W
R1042	1-216-659-11	METAL CHIP	2.2K	0.50%	1/10W
R1043	1-216-025-91	RES,CHIP	100	5%	1/10W
R1044	1-216-025-91	RES,CHIP	100	5%	1/10W
R1045	1-216-097-91	RES,CHIP	100K	5%	1/10W
R1046	1-216-051-00	RES,CHIP	1.2K	5%	1/10W
R1047	1-216-059-00	RES,CHIP	2.7K	5%	1/10W
R1048	1-216-013-00	RES,CHIP	33	5%	1/10W
R1049	1-216-049-91	RES,CHIP	1K	5%	1/10W
R1050	1-216-025-91	RES,CHIP	100	5%	1/10W
R1051	1-216-025-91	RES,CHIP	100	5%	1/10W
R1052	1-216-073-00	RES,CHIP	10K	5%	1/10W
R1053	1-216-025-91	RES,CHIP	100	5%	1/10W
R1054	1-216-657-11	METAL CHIP	1.8K	0.50%	1/10W
R1055	1-216-657-11	METAL CHIP	1.8K	0.50%	1/10W
R1056	1-216-661-11	METAL CHIP	2.7K	0.50%	1/10W
R1057	1-216-025-91	RES,CHIP	100	5%	1/10W
R1058	1-216-025-91	RES,CHIP	100	5%	1/10W
R1059	1-216-025-91	RES,CHIP	100	5%	1/10W
R1063	1-216-073-00	RES,CHIP	10K	5%	1/10W
R1064	1-216-065-91	RES,CHIP	4.7K	5%	1/10W
R1065	1-216-057-00	RES,CHIP	2.2K	5%	1/10W
R1067	1-216-073-00	RES,CHIP	10K	5%	1/10W
R1068	1-216-065-91	RES,CHIP	4.7K	5%	1/10W
R1069	1-216-025-91	RES,CHIP	100	5%	1/10W
R1070	1-216-049-91	RES,CHIP	1K	5%	1/10W
R1071	1-216-065-91	RES,CHIP	4.7K	5%	1/10W
R1072	1-216-071-00	RES,CHIP	8.2K	5%	1/10W
R1073	1-216-031-00	RES,CHIP	180	5%	1/10W
R1074	1-216-651-11	METAL CHIP	1K	0.50%	1/10W
R1075	1-216-651-11	METAL CHIP	1K	0.50%	1/10W
R1076	1-216-057-00	RES,CHIP	2.2K	5%	1/10W
R1077	1-216-025-91	RES,CHIP	100	5%	1/10W
R1078	1-216-097-91	RES,CHIP	100K	5%	1/10W
R1079	1-216-051-00	RES,CHIP	1.2K	5%	1/10W
R1080	1-216-013-00	RES,CHIP	33	5%	1/10W
R1081	1-216-059-00	RES,CHIP	2.7K	5%	1/10W
R1082	1-216-025-91	RES,CHIP	100	5%	1/10W
R1083	1-216-025-91	RES,CHIP	100	5%	1/10W
R1084	1-216-025-91	RES,CHIP	100	5%	1/10W
R1085	1-216-017-91	RES,CHIP	47	5%	1/10W
R1086	1-216-025-91	RES,CHIP	100	5%	1/10W
R1087	1-216-033-00	RES,CHIP	220	5%	1/10W
R1088	1-216-029-00	RES,CHIP	150	5%	1/10W
R1089	1-216-025-91	RES,CHIP	100	5%	1/10W
R1091	1-216-089-91	RES,CHIP	47K	5%	1/10W
R1092	1-216-061-00	RES,CHIP	3.3K	5%	1/10W
R1093	1-216-049-91	RES,CHIP	1K	5%	1/10W
R1094	1-216-089-91	RES,CHIP	47K	5%	1/10W
R1095	1-216-017-91	RES,CHIP	47	5%	1/10W
R1098	1-216-017-91	RES,CHIP	47	5%	1/10W
R1099	1-216-017-91	RES,CHIP	47	5%	1/10W
R1100	1-216-017-91	RES,CHIP	47	5%	1/10W
R1101	1-216-017-91	RES,CHIP	47	5%	1/10W
R1103	1-216-017-91	RES,CHIP	47	5%	1/10W
R1106	1-216-073-00	RES,CHIP	10K	5%	1/10W
R1111	1-216-017-91	RES,CHIP	47	5%	1/10W
R1112	1-216-017-91	RES,CHIP	47	5%	1/10W
R1113	1-216-017-91	RES,CHIP	47	5%	1/10W
R1118	1-216-017-91	RES,CHIP	47	5%	1/10W
R1119	1-216-073-00	RES,CHIP	10K	5%	1/10W
R1120	1-216-073-00	RES,CHIP	10K	5%	1/10W
R1121	1-216-017-91	RES,CHIP	47	5%	1/10W
R1122	1-216-049-91	RES,CHIP	1K	5%	1/10W
R1123	1-216-017-91	RES,CHIP	47	5%	1/10W
R1124	1-216-071-00	RES,CHIP	8.2K	5%	1/10W
R1125	1-216-059-00	RES,CHIP	2.7K	5%	1/10W
R1126	1-216-017-91	RES,CHIP	47	5%	1/10W
R1127	1-216-049-91	RES,CHIP	1K	5%	1/10W
R1128	1-216-065-91	RES,CHIP	4.7K	5%	1/10W
R1129	1-216-017-91	RES,CHIP	47	5%	1/10W
R1132	1-216-041-00	RES,CHIP	470	5%	1/10W
R1133	1-216-017-91	RES,CHIP	47	5%	1/10W
R1200	1-216-017-91	RES,CHIP	47	5%	1/10W
R1201	1-216-055-00	RES,CHIP	1.8K	5%	1/10W
R1202	1-216-097-91	RES,CHIP	100K	5%	1/10W
R1203	1-216-017-91	RES,CHIP	47	5%	1/10W
R1204	1-216-021-00	RES,CHIP	68	5%	1/10W
R1205	1-216-077-00	RES,CHIP	15K	5%	1/10W
R1206	1-216-077-00	RES,CHIP	15K	5%	1/10W
R1207	1-216-017-91	RES,CHIP	47	5%	1/10W
R1214	1-216-645-11	METAL CHIP	560	0.50%	1/10W
R1215	1-216-049-91	RES,CHIP	1K	5%	1/10W
R1216	1-216-071-00	RES,CHIP	8.2K	5%	1/10W
R1217	1-216-647-11	METAL CHIP	680	0.50%	1/10W
R1218	1-216-025-91	RES,CHIP	100	5%	1/10W
R1219	1-216-295-91	SHORT 0			
R1220	1-216-065-91	RES,CHIP	4.7K	5%	1/10W
R1221	1-216-067-00	RES,CHIP	5.6K	5%	1/10W

Ref.No.	Part No.	Description			Remark
R1222	1-216-043-91	RES,CHIP	560	5%	1/10W
R1223	1-216-049-91	RES,CHIP	1K	5%	1/10W
R1224	1-216-295-91	SHORT 0			
R1225	1-216-295-91	SHORT 0			
R1226	1-216-033-00	RES,CHIP	220	5%	1/10W
R1227	1-216-057-00	RES,CHIP	2.2K	5%	1/10W
R1228	1-216-105-91	RES,CHIP	220K	5%	1/10W
R1229	1-216-041-00	RES,CHIP	470	5%	1/10W
R1231	1-216-049-91	RES,CHIP	1K	5%	1/10W
R1232	1-216-025-91	RES,CHIP	100	5%	1/10W
R1242	1-216-055-00	RES,CHIP	1.8K	5%	1/10W
R1243	1-216-055-00	RES,CHIP	1.8K	5%	1/10W
R1244	1-216-055-00	RES,CHIP	1.8K	5%	1/10W
R1245	1-216-055-00	RES,CHIP	1.8K	5%	1/10W
R1253	1-216-017-91	RES,CHIP	47	5%	1/10W
R1259	1-216-053-00	RES,CHIP	1.5K	5%	1/10W
R1260	1-216-041-00	RES,CHIP	470	5%	1/10W
R1265	1-216-025-91	RES,CHIP	100	5%	1/10W
R1266	1-216-055-00	RES,CHIP	1.8K	5%	1/10W
R1267	1-216-055-00	RES,CHIP	1.8K	5%	1/10W
R1270	1-216-017-91	RES,CHIP	47	5%	1/10W
R1278	1-216-025-91	RES,CHIP	100	5%	1/10W
R1279	1-216-025-91	RES,CHIP	100	5%	1/10W
R1280	1-216-025-91	RES,CHIP	100	5%	1/10W
R1281	1-216-121-91	RES,CHIP	1M	5%	1/10W
R1284	1-216-025-91	RES,CHIP	100	5%	1/10W
R1285	1-216-025-91	RES,CHIP	100	5%	1/10W
R1286	1-216-023-00	RES,CHIP	82	5%	1/10W
R1287	1-216-295-91	SHORT 0			
R1288	1-216-025-91	RES,CHIP	100	5%	1/10W
R1290	1-216-025-91	RES,CHIP	100	5%	1/10W
R1291	1-216-025-91	RES,CHIP	100	5%	1/10W
R1292	1-216-025-91	RES,CHIP	100	5%	1/10W
R1293	1-216-025-91	RES,CHIP	100	5%	1/10W
R1295	1-216-691-11	METAL CHIP	47K	0.50%	1/10W
R1296	1-216-679-11	METAL CHIP	15K	0.50%	1/10W
R1297	1-216-295-91	SHORT 0			
R1298	1-216-295-91	SHORT 0			
R1300	1-216-017-91	RES,CHIP	47	5%	1/10W
R1303	1-216-065-91	RES,CHIP	4.7K	5%	1/10W
R1304	1-216-057-00	RES,CHIP	2.2K	5%	1/10W
R1305	1-216-065-91	RES,CHIP	4.7K	5%	1/10W
R1306	1-216-017-91	RES,CHIP	47	5%	1/10W
R1307	1-216-065-91	RES,CHIP	4.7K	5%	1/10W
R1308	1-216-677-11	METAL CHIP	12K	0.50%	1/10W
R1309	1-216-049-91	RES,CHIP	1K	5%	1/10W
R1311	1-216-651-11	METAL CHIP	1K	0.50%	1/10W
R1312	1-216-651-11	METAL CHIP	1K	0.50%	1/10W
R1313	1-216-659-11	METAL CHIP	2.2K	0.50%	1/10W
R1314	1-216-025-91	RES,CHIP	100	5%	1/10W
R1315	1-216-097-91	RES,CHIP	100K	5%	1/10W
R1316	1-216-051-00	RES,CHIP	1.2K	5%	1/10W
R1317	1-216-059-00	RES,CHIP	2.7K	5%	1/10W
R1318	1-216-065-91	RES,CHIP	4.7K	5%	1/10W
R1319	1-216-057-00	RES,CHIP	2.2K	5%	1/10W
R1320	1-216-065-91	RES,CHIP	4.7K	5%	1/10W
R1321	1-216-017-91	RES,CHIP	47	5%	1/10W
R1322	1-216-065-91	RES,CHIP	4.7K	5%	1/10W

Ref.No.	Part No.	Description			Remark
R1323	1-216-671-11	METAL CHIP	6.8K	0.50%	1/10W
R1325	1-216-651-11	METAL CHIP	1K	0.50%	1/10W
R1326	1-216-651-11	METAL CHIP	1K	0.50%	1/10W
R1327	1-216-057-00	RES,CHIP	2.2K	5%	1/10W
R1328	1-216-025-91	RES,CHIP	100	5%	1/10W
R1329	1-216-097-91	RES,CHIP	100K	5%	1/10W
R1330	1-216-051-00	RES,CHIP	1.2K	5%	1/10W
R1331	1-216-059-00	RES,CHIP	2.7K	5%	1/10W
R1401	1-216-017-91	RES,CHIP	47	5%	1/10W
R1406	1-216-089-91	RES,CHIP	47K	5%	1/10W
R1408	1-216-073-00	RES,CHIP	10K	5%	1/10W
R1410	1-216-089-91	RES,CHIP	47K	5%	1/10W
R1412	1-216-025-91	RES,CHIP	100	5%	1/10W
R1416	1-216-089-91	RES,CHIP	47K	5%	1/10W
R1419	1-216-033-00	RES,CHIP	220	5%	1/10W
R1420	1-216-083-00	RES,CHIP	27K	5%	1/10W
R1421	1-216-049-91	RES,CHIP	1K	5%	1/10W
R1422	1-216-091-00	RES,CHIP	56K	5%	1/10W
R1423	1-216-651-11	METAL CHIP	1K	0.50%	1/10W
R1424	1-216-651-11	METAL CHIP	1K	0.50%	1/10W
R1425	1-216-049-91	RES,CHIP	1K	5%	1/10W
R1426	1-216-295-91	SHORT 0			
R1433	1-216-025-91	RES,CHIP	100	5%	1/10W
R1435	1-216-025-91	RES,CHIP	100	5%	1/10W
R1436	1-216-073-00	RES,CHIP	10K	5%	1/10W
R1437	1-216-049-91	RES,CHIP	1K	5%	1/10W
R1439	1-216-025-91	RES,CHIP	100	5%	1/10W
R1440	1-216-049-91	RES,CHIP	1K	5%	1/10W
R1441	1-216-049-91	RES,CHIP	1K	5%	1/10W
R1442	1-216-047-91	RES,CHIP	820	5%	1/10W
R1443	1-216-017-91	RES,CHIP	47	5%	1/10W
R1444	1-216-049-91	RES,CHIP	1K	5%	1/10W
R1445	1-216-049-91	RES,CHIP	1K	5%	1/10W
R1447	1-216-089-91	RES,CHIP	47K	5%	1/10W
R1448	1-216-089-91	RES,CHIP	47K	5%	1/10W
R1450	1-216-017-91	RES,CHIP	47	5%	1/10W
R1451	1-216-017-91	RES,CHIP	47	5%	1/10W
R1453	1-216-017-91	RES,CHIP	47	5%	1/10W
R1454	1-216-065-91	RES,CHIP	4.7K	5%	1/10W
R1455	1-216-017-91	RES,CHIP	47	5%	1/10W
R1456	1-216-063-91	RES,CHIP	3.9K	5%	1/10W
R1457	1-216-073-00	RES,CHIP	10K	5%	1/10W
R1458	1-216-067-00	RES,CHIP	5.6K	5%	1/10W
R1459	1-216-061-00	RES,CHIP	3.3K	5%	1/10W
R1460	1-216-017-91	RES,CHIP	47	5%	1/10W
R1461	1-218-767-11	METAL CHIP	430K	0.50%	1/10W
R1462	1-216-045-00	RES,CHIP	680	5%	1/10W
R1463	1-216-017-91	RES,CHIP	47	5%	1/10W
R1464	1-216-065-91	RES,CHIP	4.7K	5%	1/10W
R1465	1-216-017-91	RES,CHIP	47	5%	1/10W
R1466	1-216-017-91	RES,CHIP	47	5%	1/10W
R1467	1-216-065-91	RES,CHIP	4.7K	5%	1/10W
R1468	1-216-101-00	RES,CHIP	150K	5%	1/10W
R1469	1-216-053-00	RES,CHIP	1.5K	5%	1/10W
R1470	1-216-017-91	RES,CHIP	47	5%	1/10W
R1471	1-216-017-91	RES,CHIP	47	5%	1/10W
R1472	1-216-065-91	RES,CHIP	4.7K	5%	1/10W
R1473	1-216-053-00	RES,CHIP	1.5K	5%	1/10W
R1474	1-216-053-00	RES,CHIP	1.5K	5%	1/10W

BA

Ref.No.	Part No.	Description			Remark
R1475	1-216-059-00	RES,CHIP	2.7K	5%	1/10W
R1476	1-216-059-00	RES,CHIP	2.7K	5%	1/10W
R1477	1-216-097-91	RES,CHIP	100K	5%	1/10W
R1478	1-216-017-91	RES,CHIP	47	5%	1/10W
R1479	1-216-017-91	RES,CHIP	47	5%	1/10W
R1480	1-216-017-91	RES,CHIP	47	5%	1/10W
R1481	1-216-051-00	RES,CHIP	1.2K	5%	1/10W
R1482	1-216-041-00	RES,CHIP	470	5%	1/10W
R1483	1-216-053-00	RES,CHIP	1.5K	5%	1/10W
R1484	1-216-089-91	RES,CHIP	47K	5%	1/10W
R1499	1-216-675-11	METAL CHIP	10K	0.50%	1/10W
R1500	1-216-675-11	METAL CHIP	10K	0.50%	1/10W
R1501	1-216-643-11	METAL CHIP	470	0.50%	1/10W
R1502	1-216-675-11	METAL CHIP	10K	0.50%	1/10W
R1503	1-216-675-11	METAL CHIP	10K	0.50%	1/10W
R1504	1-216-295-91	SHORT 0			
R1505	1-216-089-91	RES,CHIP	47K	5%	1/10W
R1506	1-216-089-91	RES,CHIP	47K	5%	1/10W
R1507	1-216-653-11	METAL CHIP	1.2K	0.50%	1/10W
R1508	1-216-667-11	METAL CHIP	4.7K	0.50%	1/10W
R1509	1-216-667-11	METAL CHIP	4.7K	0.50%	1/10W
R1510	1-216-653-11	METAL CHIP	1.2K	0.50%	1/10W
R1511	1-216-683-11	METAL CHIP	22K	0.50%	1/10W
R1512	1-216-681-11	METAL CHIP	18K	0.50%	1/10W
R1514	1-216-017-91	RES,CHIP	47	5%	1/10W
R1515	1-216-017-91	RES,CHIP	47	5%	1/10W
R1516	1-216-017-91	RES,CHIP	47	5%	1/10W
R1517	1-216-017-91	RES,CHIP	47	5%	1/10W
R1600	1-216-025-91	RES,CHIP	100	5%	1/10W
R1601	1-216-025-91	RES,CHIP	100	5%	1/10W
R1602	1-216-083-00	RES,CHIP	27K	5%	1/10W
R1603	1-216-089-91	RES,CHIP	47K	5%	1/10W
R1604	1-216-133-00	RES,CHIP	3.3M	5%	1/10W
R1605	1-216-039-00	RES,CHIP	390	5%	1/10W
R1606	1-216-039-00	RES,CHIP	390	5%	1/10W
R1607	1-216-017-91	RES,CHIP	47	5%	1/10W
R1608	1-216-017-91	RES,CHIP	47	5%	1/10W
R1609	1-216-065-91	RES,CHIP	4.7K	5%	1/10W
R1610	1-216-041-00	RES,CHIP	470	5%	1/10W
R1612	1-216-041-00	RES,CHIP	470	5%	1/10W
R1614	1-216-041-00	RES,CHIP	470	5%	1/10W
R1616	1-216-017-91	RES,CHIP	47	5%	1/10W
R1617	1-216-017-91	RES,CHIP	47	5%	1/10W
R1618	1-216-017-91	RES,CHIP	47	5%	1/10W
R1619	1-216-017-91	RES,CHIP	47	5%	1/10W
R1620	1-216-683-11	METAL CHIP	22K	0.50%	1/10W
R1621	1-216-089-91	RES,CHIP	47K	5%	1/10W
R1622	1-216-077-00	RES,CHIP	15K	5%	1/10W
R1623	1-216-017-91	RES,CHIP	47	5%	1/10W
R1624	1-216-017-91	RES,CHIP	47	5%	1/10W
R1625	1-216-017-91	RES,CHIP	47	5%	1/10W
R1626	1-216-017-91	RES,CHIP	47	5%	1/10W
R1627	1-216-081-00	RES,CHIP	22K	5%	1/10W
R1628	1-216-037-00	RES,CHIP	330	5%	1/10W
R1629	1-216-017-91	RES,CHIP	47	5%	1/10W
R1630	1-216-017-91	RES,CHIP	47	5%	1/10W
R1631	1-216-691-11	METAL CHIP	47K	0.50%	1/10W
R1632	1-216-089-91	RES,CHIP	47K	5%	1/10W
R1633	1-216-085-00	RES,CHIP	33K	5%	1/10W
R1634	1-216-037-00	RES,CHIP	330	5%	1/10W
R1635	1-216-025-91	RES,CHIP	100	5%	1/10W
R1636	1-216-017-91	RES,CHIP	47	5%	1/10W
R1637	1-216-017-91	RES,CHIP	47	5%	1/10W
R1638	1-216-017-91	RES,CHIP	47	5%	1/10W
R1639	1-216-017-91	RES,CHIP	47	5%	1/10W
R1640	1-216-017-91	RES,CHIP	47	5%	1/10W
R1641	1-216-017-91	RES,CHIP	47	5%	1/10W
R1642	1-216-017-91	RES,CHIP	47	5%	1/10W
R1643	1-216-017-91	RES,CHIP	47	5%	1/10W
R1644	1-216-017-91	RES,CHIP	47	5%	1/10W
R1645	1-216-017-91	RES,CHIP	47	5%	1/10W
R1646	1-216-089-91	RES,CHIP	47K	5%	1/10W
R1647	1-216-017-91	RES,CHIP	47	5%	1/10W
R1648	1-216-081-00	RES,CHIP	22K	5%	1/10W
R1649	1-216-037-00	RES,CHIP	330	5%	1/10W
R1650	1-216-017-91	RES,CHIP	47	5%	1/10W
R1651	1-216-017-91	RES,CHIP	47	5%	1/10W
R1652	1-216-067-00	RES,CHIP	5.6K	5%	1/10W
R1653	1-216-017-91	RES,CHIP	47	5%	1/10W
R1654	1-216-067-00	RES,CHIP	5.6K	5%	1/10W
R1655	1-216-017-91	RES,CHIP	47	5%	1/10W
R1656	1-216-017-91	RES,CHIP	47	5%	1/10W
R1657	1-216-017-91	RES,CHIP	47	5%	1/10W
R1658	1-216-295-91	SHORT 0			
R1659	1-216-295-91	SHORT 0			
R1660	1-216-065-91	RES,CHIP	4.7K	5%	1/10W
R1661	1-216-049-91	RES,CHIP	1K	5%	1/10W
R1662	1-247-807-31	CARBON	100	5%	1/4W
R1663	1-216-017-91	RES,CHIP	47	5%	1/10W
R1730	1-216-049-91	RES,CHIP	1K	5%	1/10W
R1731	1-216-049-91	RES,CHIP	1K	5%	1/10W
R1732	1-216-049-91	RES,CHIP	1K	5%	1/10W
R1785	1-216-017-91	RES,CHIP	47	5%	1/10W
R1786	1-216-017-91	RES,CHIP	47	5%	1/10W
R1787	1-216-017-91	RES,CHIP	47	5%	1/10W
R1788	1-216-017-91	RES,CHIP	47	5%	1/10W
R1789	1-216-017-91	RES,CHIP	47	5%	1/10W
R1790	1-216-017-91	RES,CHIP	47	5%	1/10W
R1791	1-216-017-91	RES,CHIP	47	5%	1/10W
R1792	1-216-017-91	RES,CHIP	47	5%	1/10W
R1793	1-216-017-91	RES,CHIP	47	5%	1/10W
R1794	1-216-017-91	RES,CHIP	47	5%	1/10W
R1795	1-216-017-91	RES,CHIP	47	5%	1/10W
R1796	1-216-017-91	RES,CHIP	47	5%	1/10W
R1797	1-216-017-91	RES,CHIP	47	5%	1/10W
R1798	1-216-017-91	RES,CHIP	47	5%	1/10W
R1800	1-216-065-91	RES,CHIP	4.7K	5%	1/10W
R1801	1-216-017-91	RES,CHIP	47	5%	1/10W
R1802	1-216-049-91	RES,CHIP	1K	5%	1/10W
R1803	1-216-001-00	RES,CHIP	10	5%	1/10W
R1804	1-216-057-00	RES,CHIP	2.2K	5%	1/10W
R1805	1-216-017-91	RES,CHIP	47	5%	1/10W
R1806	1-216-017-91	RES,CHIP	47	5%	1/10W
R1807	1-216-025-91	RES,CHIP	100	5%	1/10W
R1808	1-216-097-91	RES,CHIP	100K	5%	1/10W
R1809	1-216-097-91	RES,CHIP	100K	5%	1/10W

Ref.No.	Part No.	Description			Remark
R1810	1-216-097-91	RES,CHIP	100K	5%	1/10W
R1811	1-216-097-91	RES,CHIP	100K	5%	1/10W
R1812	1-216-085-00	RES,CHIP	33K	5%	1/10W
R1813	1-216-033-00	RES,CHIP	220	5%	1/10W
R1814	1-216-001-00	RES,CHIP	10	5%	1/10W
R1815	1-216-017-91	RES,CHIP	47	5%	1/10W
R1816	1-216-017-91	RES,CHIP	47	5%	1/10W
R1817	1-216-699-11	METAL CHIP	100K	0.50%	1/10W
R1818	1-216-049-91	RES,CHIP	1K	5%	1/10W
R1819	1-216-677-11	METAL CHIP	12K	0.50%	1/10W
R1820	1-216-049-91	RES,CHIP	1K	5%	1/10W
R1821	1-216-017-91	RES,CHIP	47	5%	1/10W
R1822	1-216-017-91	RES,CHIP	47	5%	1/10W
R1823	1-216-017-91	RES,CHIP	47	5%	1/10W
R1824	1-216-017-91	RES,CHIP	47	5%	1/10W
R1827	1-216-017-91	RES,CHIP	47	5%	1/10W
R1828	1-216-017-91	RES,CHIP	47	5%	1/10W
R1829	1-216-017-91	RES,CHIP	47	5%	1/10W
R1834	1-216-073-00	RES,CHIP	10K	5%	1/10W
R1835	1-216-063-91	RES,CHIP	3.9K	5%	1/10W
R1836	1-216-067-00	RES,CHIP	5.6K	5%	1/10W
R1837	1-216-061-00	RES,CHIP	3.3K	5%	1/10W
R1838	1-216-017-91	RES,CHIP	47	5%	1/10W
R1840	1-216-017-91	RES,CHIP	47	5%	1/10W
R1841	1-216-045-00	RES,CHIP	680	5%	1/10W
R1842	1-216-017-91	RES,CHIP	47	5%	1/10W
R1843	1-216-017-91	RES,CHIP	47	5%	1/10W
R1844	1-216-017-91	RES,CHIP	47	5%	1/10W
R1846	1-216-065-91	RES,CHIP	4.7K	5%	1/10W
R1847	1-216-053-00	RES,CHIP	1.5K	5%	1/10W
R1848	1-216-017-91	RES,CHIP	47	5%	1/10W
R1849	1-216-017-91	RES,CHIP	47	5%	1/10W
R1850	1-216-065-91	RES,CHIP	4.7K	5%	1/10W
R1852	1-216-053-00	RES,CHIP	1.5K	5%	1/10W
R1853	1-216-053-00	RES,CHIP	1.5K	5%	1/10W
R1854	1-216-059-00	RES,CHIP	2.7K	5%	1/10W
R1856	1-216-097-91	RES,CHIP	100K	5%	1/10W
R1857	1-216-017-91	RES,CHIP	47	5%	1/10W
R1858	1-216-017-91	RES,CHIP	47	5%	1/10W
R1859	1-216-017-91	RES,CHIP	47	5%	1/10W
R1860	1-216-017-91	RES,CHIP	47	5%	1/10W
R1861	1-216-065-91	RES,CHIP	4.7K	5%	1/10W
R1862	1-216-017-91	RES,CHIP	47	5%	1/10W
R1863	1-216-017-91	RES,CHIP	47	5%	1/10W
R1864	1-216-017-91	RES,CHIP	47	5%	1/10W
R1865	1-216-017-91	RES,CHIP	47	5%	1/10W
R1866	1-216-017-91	RES,CHIP	47	5%	1/10W
R1867	1-216-041-00	RES,CHIP	470	5%	1/10W
R1868	1-216-049-91	RES,CHIP	1K	5%	1/10W
R1869	1-216-049-91	RES,CHIP	1K	5%	1/10W
R1870	1-216-017-91	RES,CHIP	47	5%	1/10W
R1871	1-216-061-00	RES,CHIP	3.3K	5%	1/10W
R1872	1-216-057-00	RES,CHIP	2.2K	5%	1/10W
R1873	1-216-049-91	RES,CHIP	1K	5%	1/10W
R2000	1-216-073-00	RES,CHIP	10K	5%	1/10W
R2001	1-216-073-00	RES,CHIP	10K	5%	1/10W
R2002	1-216-073-00	RES,CHIP	10K	5%	1/10W
R2003	1-216-073-00	RES,CHIP	10K	5%	1/10W
R2004	1-216-073-00	RES,CHIP	10K	5%	1/10W

Ref.No.	Part No.	Description			Remark
R2005	1-216-073-00	RES,CHIP	10K	5%	1/10W
R2006	1-216-073-00	RES,CHIP	10K	5%	1/10W
R2007	1-216-073-00	RES,CHIP	10K	5%	1/10W
R2009	1-216-025-91	RES,CHIP	100	5%	1/10W
R2011	1-216-025-91	RES,CHIP	100	5%	1/10W
R2012	1-216-017-91	RES,CHIP	47	5%	1/10W
R2013	1-216-017-91	RES,CHIP	47	5%	1/10W
R2015	1-216-017-91	RES,CHIP	47	5%	1/10W
R2016	1-216-017-91	RES,CHIP	47	5%	1/10W
R2017	1-216-025-91	RES,CHIP	100	5%	1/10W
R2018	1-216-025-91	RES,CHIP	100	5%	1/10W
R2019	1-216-017-91	RES,CHIP	47	5%	1/10W
R2020	1-216-073-00	RES,CHIP	10K	5%	1/10W
R2021	1-216-017-91	RES,CHIP	47	5%	1/10W
R2022	1-216-073-00	RES,CHIP	10K	5%	1/10W
R2023	1-216-073-00	RES,CHIP	10K	5%	1/10W
R2024	1-216-073-00	RES,CHIP	10K	5%	1/10W
R2025	1-216-073-00	RES,CHIP	10K	5%	1/10W
R2026	1-216-073-00	RES,CHIP	10K	5%	1/10W
R2027	1-216-073-00	RES,CHIP	10K	5%	1/10W
R2028	1-216-025-91	RES,CHIP	100	5%	1/10W
R2029	1-216-025-91	RES,CHIP	100	5%	1/10W
R2030	1-216-017-91	RES,CHIP	47	5%	1/10W
R2031	1-216-025-91	RES,CHIP	100	5%	1/10W
R2032	1-216-025-91	RES,CHIP	100	5%	1/10W
R2033	1-216-017-91	RES,CHIP	47	5%	1/10W
R2034	1-216-025-91	RES,CHIP	100	5%	1/10W
R2035	1-216-073-00	RES,CHIP	10K	5%	1/10W
R2036	1-216-025-91	RES,CHIP	100	5%	1/10W
R2037	1-216-017-91	RES,CHIP	47	5%	1/10W
R2038	1-216-017-91	RES,CHIP	47	5%	1/10W
R2039	1-216-017-91	RES,CHIP	47	5%	1/10W
R2040	1-216-073-00	RES,CHIP	10K	5%	1/10W
R2041	1-216-073-00	RES,CHIP	10K	5%	1/10W
R2042	1-216-073-00	RES,CHIP	10K	5%	1/10W
R2043	1-216-073-00	RES,CHIP	10K	5%	1/10W
R2044	1-216-073-00	RES,CHIP	10K	5%	1/10W
R2045	1-216-073-00	RES,CHIP	10K	5%	1/10W
R2046	1-216-073-00	RES,CHIP	10K	5%	1/10W
R2047	1-216-073-00	RES,CHIP	10K	5%	1/10W
R2048	1-216-025-91	RES,CHIP	100	5%	1/10W
R2049	1-216-025-91	RES,CHIP	100	5%	1/10W
R2050	1-216-025-91	RES,CHIP	100	5%	1/10W
R2051	1-216-025-91	RES,CHIP	100	5%	1/10W
R2052	1-216-073-00	RES,CHIP	10K	5%	1/10W
R2056	1-216-017-91	RES,CHIP	47	5%	1/10W
R2057	1-216-017-91	RES,CHIP	47	5%	1/10W
R2058	1-216-017-91	RES,CHIP	47	5%	1/10W
R2059	1-216-073-00	RES,CHIP	10K	5%	1/10W
R2060	1-216-017-91	RES,CHIP	47	5%	1/10W
R2061	1-216-017-91	RES,CHIP	47	5%	1/10W
R2062	1-216-017-91	RES,CHIP	47	5%	1/10W
R2063	1-216-017-91	RES,CHIP	47	5%	1/10W
R2064	1-216-017-91	RES,CHIP	47	5%	1/10W
R2103	1-216-057-00	RES,CHIP	2.2K	5%	1/10W
R2104	1-216-695-11	METAL CHIP	68K	0.50%	1/10W
R2105	1-216-687-11	METAL CHIP	33K	0.50%	1/10W
R2106	1-216-699-11	METAL CHIP	100K	0.50%	1/10W

BA

Ref.No.	Part No.	Description	Remark
R2107	1-216-699-11	METAL CHIP 100K 0.50% 1/10W	
R2108	1-216-678-11	METAL CHIP 13K 0.50% 1/10W	
R2109	1-216-689-11	METAL CHIP 39K 0.50% 1/10W	
R2110	1-216-699-11	METAL CHIP 100K 0.50% 1/10W	
R2111	1-216-025-91	RES,CHIP 100 5% 1/10W	
R2112	1-216-699-11	METAL CHIP 100K 0.50% 1/10W	
R2113	1-216-699-11	METAL CHIP 100K 0.50% 1/10W	
R2114	1-216-295-91	SHORT 0	
R2115	1-216-681-11	METAL CHIP 18K 0.50% 1/10W	
R2118	1-216-065-91	RES,CHIP 4.7K 5% 1/10W	
R2200	1-216-065-91	RES,CHIP 4.7K 5% 1/10W	
R2201	1-216-025-91	RES,CHIP 100 5% 1/10W	
R2202	1-216-025-91	RES,CHIP 100 5% 1/10W	
R2203	1-216-025-91	RES,CHIP 100 5% 1/10W	
R2204	1-216-049-91	RES,CHIP 1K 5% 1/10W	
R2208	1-216-089-91	RES,CHIP 47K 5% 1/10W	
R2216	1-216-295-91	SHORT 0	
R2217	1-216-295-91	SHORT 0	
	<RESISTOR BLOCK>		
RB2000	1-236-908-11	NETWORK RESISTOR (CHIP) 10K	
RB2001	1-236-908-11	NETWORK RESISTOR (CHIP) 10K	
RB2002	1-236-908-11	NETWORK RESISTOR (CHIP) 10K	
	<VARIABLE RESISTOR>		
RV200	1-238-801-11	RES, ADJ, CERMET 5K	
RV501	1-238-803-11	RES, ADJ, CERMET 20K	
RV502	1-238-803-11	RES, ADJ, CERMET 20K	
RV503	1-238-803-11	RES, ADJ, CERMET 20K	
RV504	1-238-803-11	RES, ADJ, CERMET 20K	
RV800	1-238-803-11	RES, ADJ, CERMET 20K	
	<RELAY>		
RY1	1-515-716-11	RELAY (TQ2-5V)	
RY2	1-515-716-11	RELAY (TQ2-5V)	
RY3	1-515-716-11	RELAY (TQ2-5V)	
RY4	1-515-716-11	RELAY (TQ2-5V)	
RY800	1-515-716-11	RELAY (TQ2-5V)	
RY1600	1-515-911-11	RELAY	
	<SWITCH>		
S1	1-570-865-11	SWITCH, SLIDE	
	<TERMINAL BOARD>		
TB1	1-694-481-11	TERMINAL BOARD ASSY, I/O	
TB2	1-694-483-11	TERMINAL BOARD ASSY, I/O	
	<TEST PIN>		
TP1	1-535-757-11	CHIP, CHECKER	
TP2	1-535-757-11	CHIP, CHECKER	
TP3	1-535-757-11	CHIP, CHECKER	
TP4	1-535-757-11	CHIP, CHECKER	
TP5	1-535-757-11	CHIP, CHECKER	
TP451	1-535-757-11	CHIP, CHECKER	
TP501	1-535-757-11	CHIP, CHECKER	
TP551	1-535-757-11	CHIP, CHECKER	
TP800	1-535-757-11	CHIP, CHECKER	
TP801	1-535-757-11	CHIP, CHECKER	
TP802	1-535-757-11	CHIP, CHECKER	
TP803	1-535-757-11	CHIP, CHECKER	
TP804	1-535-757-11	CHIP, CHECKER	
TP1000	1-535-757-11	CHIP, CHECKER	
TP1001	1-535-757-11	CHIP, CHECKER	
TP1002	1-535-757-11	CHIP, CHECKER	
TP1005	1-535-757-11	CHIP, CHECKER	
TP1007	1-535-757-11	CHIP, CHECKER	
TP1010	1-535-757-11	CHIP, CHECKER	
TP1011	1-535-757-11	CHIP, CHECKER	
TP1012	1-535-757-11	CHIP, CHECKER	
TP1013	1-535-757-11	CHIP, CHECKER	
TP1014	1-535-757-11	CHIP, CHECKER	
TP1015	1-535-757-11	CHIP, CHECKER	
TP1200	1-535-757-11	CHIP, CHECKER	
TP1201	1-535-757-11	CHIP, CHECKER	
TP1202	1-535-757-11	CHIP, CHECKER	
TP1400	1-535-757-11	CHIP, CHECKER	
TP1401	1-535-757-11	CHIP, CHECKER	
TP1402	1-535-757-11	CHIP, CHECKER	
TP1403	1-535-757-11	CHIP, CHECKER	
TP1405	1-535-757-11	CHIP, CHECKER	
TP1406	1-535-757-11	CHIP, CHECKER	
TP1407	1-535-757-11	CHIP, CHECKER	
TP1601	1-535-757-11	CHIP, CHECKER	
TP1602	1-535-757-11	CHIP, CHECKER	
TP1603	1-535-757-11	CHIP, CHECKER	
TP1604	1-535-757-11	CHIP, CHECKER	
TP1605	1-535-757-11	CHIP, CHECKER	
TP1606	1-535-757-11	CHIP, CHECKER	
TP1610	1-535-757-11	CHIP, CHECKER	
TP1611	1-535-757-11	CHIP, CHECKER	
TP1612	1-535-757-11	CHIP, CHECKER	
TP1613	1-535-757-11	CHIP, CHECKER	
TP1614	1-535-757-11	CHIP, CHECKER	
TP1615	1-535-757-11	CHIP, CHECKER	
TP1616	1-535-757-11	CHIP, CHECKER	
TP1618	1-535-757-11	CHIP, CHECKER	
TP1619	1-535-757-11	CHIP, CHECKER	
TP1620	1-535-757-11	CHIP, CHECKER	
TP1621	1-535-757-11	CHIP, CHECKER	
TP1622	1-535-757-11	CHIP, CHECKER	
TP1623	1-535-757-11	CHIP, CHECKER	
TP1624	1-535-757-11	CHIP, CHECKER	
TP1625	1-535-757-11	CHIP, CHECKER	
TP1800	1-535-757-11	CHIP, CHECKER	
TP1801	1-535-757-11	CHIP, CHECKER	
TP1802	1-535-757-11	CHIP, CHECKER	
TP1804	1-535-757-11	CHIP, CHECKER	
TP1805	1-535-757-11	CHIP, CHECKER	
TP1806	1-535-757-11	CHIP, CHECKER	
TP1807	1-535-757-11	CHIP, CHECKER	
TP1809	1-535-757-11	CHIP, CHECKER	
TP1810	1-535-757-11	CHIP, CHECKER	

Ref.No.	Part No.	Description	Remark
TP1811	1-535-757-11	CHIP, CHECKER	
TP1812	1-535-757-11	CHIP, CHECKER	
TP1814	1-535-757-11	CHIP, CHECKER	
TP1815	1-535-757-11	CHIP, CHECKER	
TP2101	1-535-757-11	CHIP, CHECKER	
TP2102	1-535-757-11	CHIP, CHECKER	
TP2103	1-535-757-11	CHIP, CHECKER	
TP2104	1-535-757-11	CHIP, CHECKER	
TP2106	1-535-757-11	CHIP, CHECKER	
TP2111	1-535-757-11	CHIP, CHECKER	
TP2112	1-535-757-11	CHIP, CHECKER	
	<CRYSTAL>		
X1201	1-767-606-11	VIBRATOR, CRYSTAL	
X1401	1-760-191-11	VIBRATOR, CRYSTAL	
X1402	1-760-191-11	VIBRATOR, CRYSTAL	
X1403	1-579-973-11	VIBRATOR, CRYSTAL	

****

* A-1135-958-A BB COMPLETE PC BOARD
****

Ref.No.	Part No.	Description	Remark
	<CAPACITOR>		
C1	1-164-004-11	CERAMIC CHIP 0.1μF 10% 25V	
C2	1-126-204-11	ELECT CHIP 47μF 20% 16V	
C4	1-126-204-11	ELECT CHIP 47μF 20% 16V	
C5	1-126-204-11	ELECT CHIP 47μF 20% 16V	
C6	1-164-004-11	CERAMIC CHIP 0.1μF 10% 25V	
C8	1-126-204-11	ELECT CHIP 47μF 20% 16V	
C9	1-164-004-11	CERAMIC CHIP 0.1μF 10% 25V	
C10	1-126-204-11	ELECT CHIP 47μF 20% 16V	
C106	1-126-204-11	ELECT CHIP 47μF 20% 16V	
C112	1-124-779-00	ELECT CHIP 10μF 20% 16V	
C113	1-124-779-00	ELECT CHIP 10μF 20% 16V	
C120	1-126-204-11	ELECT CHIP 47μF 20% 16V	
C121	1-164-004-11	CERAMIC CHIP 0.1μF 10% 25V	
C122	1-124-779-00	ELECT CHIP 10μF 20% 16V	
C123	1-126-204-11	ELECT CHIP 47μF 20% 16V	
C124	1-124-779-00	ELECT CHIP 10μF 20% 16V	
C125	1-164-004-11	CERAMIC CHIP 0.1μF 10% 25V	
C126	1-124-779-00	ELECT CHIP 10μF 20% 16V	
C127	1-124-779-00	ELECT CHIP 10μF 20% 16V	
C128	1-124-779-00	ELECT CHIP 10μF 20% 16V	
C129	1-124-779-00	ELECT CHIP 10μF 20% 16V	
C130	1-163-259-91	CERAMIC CHIP 220PF 5% 50V	
C300	1-163-038-91	CERAMIC CHIP 0.1μF 25V	
C301	1-126-204-11	ELECT CHIP 47μF 20% 16V	
C302	1-163-038-91	CERAMIC CHIP 0.1μF 25V	
C303	1-163-038-91	CERAMIC CHIP 0.1μF 25V	
C304	1-163-038-91	CERAMIC CHIP 0.1μF 25V	
C305	1-163-038-91	CERAMIC CHIP 0.1μF 25V	
C306	1-163-038-91	CERAMIC CHIP 0.1μF 25V	
C307	1-163-038-91	CERAMIC CHIP 0.1μF 25V	
C308	1-164-004-11	CERAMIC CHIP 0.1μF 10% 25V	
C309	1-164-004-11	CERAMIC CHIP 0.1μF 10% 25V	
C310	1-163-038-91	CERAMIC CHIP 0.1μF 25V	
C311	1-163-038-91	CERAMIC CHIP 0.1μF 25V	
C312	1-126-204-11	ELECT CHIP 47μF 20% 16V	
C313	1-163-038-91	CERAMIC CHIP 0.1μF 25V	
C314	1-163-038-91	CERAMIC CHIP 0.1μF 25V	
C315	1-163-038-91	CERAMIC CHIP 0.1μF 25V	
C316	1-126-204-11	ELECT CHIP 47μF 20% 16V	
C317	1-126-204-11	ELECT CHIP 47μF 20% 16V	
C318	1-163-038-91	CERAMIC CHIP 0.1μF 25V	
C319	1-163-038-91	CERAMIC CHIP 0.1μF 25V	
C320	1-126-204-11	ELECT CHIP 47μF 20% 16V	
C321	1-163-038-91	CERAMIC CHIP 0.1μF 25V	
C323	1-163-038-91	CERAMIC CHIP 0.1μF 25V	
C324	1-163-038-91	CERAMIC CHIP 0.1μF 25V	
C325	1-126-204-11	ELECT CHIP 47μF 20% 16V	
C326	1-124-779-00	ELECT CHIP 10μF 20% 16V	
C328	1-163-038-91	CERAMIC CHIP 0.1μF 25V	
C329	1-163-038-91	CERAMIC CHIP 0.1μF 25V	
C330	1-163-038-91	CERAMIC CHIP 0.1μF 25V	
C331	1-124-779-00	ELECT CHIP 10μF 20% 16V	
C333	1-163-038-91	CERAMIC CHIP 0.1μF 25V	
C334	1-163-038-91	CERAMIC CHIP 0.1μF 25V	
C335	1-163-038-91	CERAMIC CHIP 0.1μF 25V	
C336	1-126-204-11	ELECT CHIP 47μF 20% 16V	
C337	1-163-038-91	CERAMIC CHIP 0.1μF 25V	
C338	1-124-779-00	ELECT CHIP 10μF 20% 16V	
C339	1-163-038-91	CERAMIC CHIP 0.1μF 25V	
C340	1-163-038-91	CERAMIC CHIP 0.1μF 25V	
C341	1-126-204-11	ELECT CHIP 47μF 20% 16V	
C342	1-163-038-91	CERAMIC CHIP 0.1μF 25V	
C343	1-164-004-11	CERAMIC CHIP 0.1μF 10% 25V	
C344	1-163-038-91	CERAMIC CHIP 0.1μF 25V	
C345	1-126-204-11	ELECT CHIP 47μF 20% 16V	
C346	1-163-038-91	CERAMIC CHIP 0.1μF 25V	
C347	1-126-204-11	ELECT CHIP 47μF 20% 16V	
C348	1-163-038-91	CERAMIC CHIP 0.1μF 25V	
C349	1-163-133-00	CERAMIC CHIP 470PF 5% 50V	
C350	1-163-038-91	CERAMIC CHIP 0.1μF 25V	
C351	1-126-204-11	ELECT CHIP 47μF 20% 16V	
C352	1-163-021-91	CERAMIC CHIP 0.01μF 10% 50V	
C353	1-126-204-11	ELECT CHIP 47μF 20% 16V	
C354	1-164-005-11	CERAMIC CHIP 0.47μF 16V	
C355	1-126-204-11	ELECT CHIP 47μF 20% 16V	
C356	1-163-038-91	CERAMIC CHIP 0.1μF 25V	
C357	1-126-603-11	ELECT CHIP 4.7μF 20% 35V	
C359	1-163-259-91	CERAMIC CHIP 220PF 5% 50V	
C361	1-163-021-91	CERAMIC CHIP 0.01μF 10% 50V	
C362	1-126-204-11	ELECT CHIP 47μF 20% 16V	
C363	1-163-038-91	CERAMIC CHIP 0.1μF 25V	
C364	1-126-204-11	ELECT CHIP 47μF 20% 16V	
C500	1-163-038-91	CERAMIC CHIP 0.1μF 25V	
C501	1-163-038-91	CERAMIC CHIP 0.1μF 25V	
C502	1-163-038-91	CERAMIC CHIP 0.1μF 25V	
C503	1-126-204-11	ELECT CHIP 47μF 20% 16V	
C504	1-163-038-91	CERAMIC CHIP 0.1μF 25V	
C505	1-163-038-91	CERAMIC CHIP 0.1μF 25V	
C506	1-163-038-91	CERAMIC CHIP 0.1μF 25V	
C507	1-163-038-91	CERAMIC CHIP 0.1μF 25V	

BB

Ref.No.	Part No.	Description	Remark
C508	1-163-038-91	CERAMIC CHIP 0.1μF	25V
C509	1-163-038-91	CERAMIC CHIP 0.1μF	25V
C510	1-163-038-91	CERAMIC CHIP 0.1μF	25V
C511	1-163-038-91	CERAMIC CHIP 0.1μF	25V
C512	1-163-038-91	CERAMIC CHIP 0.1μF	25V
C513	1-163-038-91	CERAMIC CHIP 0.1μF	25V
C514	1-163-038-91	CERAMIC CHIP 0.1μF	25V
C515	1-163-038-91	CERAMIC CHIP 0.1μF	25V
C516	1-163-038-91	CERAMIC CHIP 0.1μF	25V
C517	1-163-038-91	CERAMIC CHIP 0.1μF	25V
C518	1-163-038-91	CERAMIC CHIP 0.1μF	25V
C519	1-126-204-11	ELECT CHIP 47μF 20%	16V
C700	1-163-038-91	CERAMIC CHIP 0.1μF	25V
C701	1-163-038-91	CERAMIC CHIP 0.1μF	25V
C702	1-126-204-11	ELECT CHIP 47μF 20%	16V
C703	1-163-038-91	CERAMIC CHIP 0.1μF	25V
C704	1-163-038-91	CERAMIC CHIP 0.1μF	25V
C705	1-163-038-91	CERAMIC CHIP 0.1μF	25V
C706	1-163-038-91	CERAMIC CHIP 0.1μF	25V
C707	1-163-038-91	CERAMIC CHIP 0.1μF	25V
C708	1-163-038-91	CERAMIC CHIP 0.1μF	25V
C709	1-163-038-91	CERAMIC CHIP 0.1μF	25V
C710	1-163-038-91	CERAMIC CHIP 0.1μF	25V
C711	1-163-038-91	CERAMIC CHIP 0.1μF	25V
C712	1-163-038-91	CERAMIC CHIP 0.1μF	25V
C713	1-163-038-91	CERAMIC CHIP 0.1μF	25V
C900	1-124-779-00	ELECT CHIP 10μF 20%	16V
C901	1-163-038-91	CERAMIC CHIP 0.1μF	25V
C902	1-124-779-00	ELECT CHIP 10μF 20%	16V
C903	1-124-779-00	ELECT CHIP 10μF 20%	16V
C904	1-163-038-91	CERAMIC CHIP 0.1μF	25V
C905	1-163-038-91	CERAMIC CHIP 0.1μF	25V
C906	1-163-038-91	CERAMIC CHIP 0.1μF	25V
C907	1-163-038-91	CERAMIC CHIP 0.1μF	25V
C908	1-163-038-91	CERAMIC CHIP 0.1μF	25V
C909	1-163-038-91	CERAMIC CHIP 0.1μF	25V
C910	1-163-038-91	CERAMIC CHIP 0.1μF	25V
C911	1-124-779-00	ELECT CHIP 10μF 20%	16V
C912	1-163-038-91	CERAMIC CHIP 0.1μF	25V
C913	1-124-779-00	ELECT CHIP 10μF 20%	16V
C914	1-163-038-91	CERAMIC CHIP 0.1μF	25V
C915	1-163-038-91	CERAMIC CHIP 0.1μF	25V
C916	1-124-779-00	ELECT CHIP 10μF 20%	16V
C917	1-163-038-91	CERAMIC CHIP 0.1μF	25V
C918	1-163-038-91	CERAMIC CHIP 0.1μF	25V
C919	1-163-038-91	CERAMIC CHIP 0.1μF	25V
C920	1-163-038-91	CERAMIC CHIP 0.1μF	25V
C921	1-163-038-91	CERAMIC CHIP 0.1μF	25V
C922	1-126-204-11	ELECT CHIP 47μF 20%	16V
C923	1-163-038-91	CERAMIC CHIP 0.1μF	25V
C924	1-163-038-91	CERAMIC CHIP 0.1μF	25V
C925	1-163-038-91	CERAMIC CHIP 0.1μF	25V
C926	1-163-038-91	CERAMIC CHIP 0.1μF	25V
C927	1-163-038-91	CERAMIC CHIP 0.1μF	25V
C928	1-163-038-91	CERAMIC CHIP 0.1μF	25V
C929	1-163-038-91	CERAMIC CHIP 0.1μF	25V
C930	1-163-038-91	CERAMIC CHIP 0.1μF	25V
C931	1-163-038-91	CERAMIC CHIP 0.1μF	25V
C932	1-163-038-91	CERAMIC CHIP 0.1μF	25V
C933	1-163-038-91	CERAMIC CHIP 0.1μF	25V
C934	1-163-038-91	CERAMIC CHIP 0.1μF	25V
C935	1-163-038-91	CERAMIC CHIP 0.1μF	25V
C936	1-163-038-91	CERAMIC CHIP 0.1μF	25V
C937	1-163-038-91	CERAMIC CHIP 0.1μF	25V
C938	1-163-038-91	CERAMIC CHIP 0.1μF	25V
C939	1-126-204-11	ELECT CHIP 47μF 20%	16V
C940	1-163-038-91	CERAMIC CHIP 0.1μF	25V
C941	1-163-038-91	CERAMIC CHIP 0.1μF	25V
C942	1-163-038-91	CERAMIC CHIP 0.1μF	25V
		<CONNECTOR>	
CN360	1-565-784-11	HEADDER, FLAT CABLE 60P	
		<DIODE>	
D300	8-719-422-12	DIODE MA8039	
		<FERRITE BEAD>	
FB100	1-414-234-22	INDUCTOR CHIP 0μH	
FB101	1-414-234-22	INDUCTOR CHIP 0μH	
FB102	1-414-234-22	INDUCTOR CHIP 0μH	
FB103	1-414-234-22	INDUCTOR CHIP 0μH	
FB104	1-414-234-22	INDUCTOR CHIP 0μH	
FB105	1-414-234-22	INDUCTOR CHIP 0μH	
		<FILTER>	
FL100	1-233-505-21	FILTER, LOW PASS	
FL101	1-233-504-21	FILTER, LOW PASS	
FL102	1-233-504-21	FILTER, LOW PASS	
FL900	1-233-876-11	FILTER, LOW PASS	
FL901	1-233-876-11	FILTER, LOW PASS	
FL902	1-233-878-11	FILTER, LOW PASS	
		<IC>	
IC1	8-752-072-94	IC CXA1875AM-T4	
IC2	8-759-460-74	IC BA05FP-E2	
IC3	8-759-460-72	IC BA033FP-E2	
IC4	8-752-072-94	IC CXA1875AM-T4	
IC106	8-759-485-79	IC TC7SET08FU(TE85L)	
IC107	8-759-485-79	IC TC7SET08FU(TE85L)	
IC300	8-759-447-90	IC TLC5733AIPM	
IC301	8-759-467-20	IC CXD8675R	
IC302	8-759-295-09	IC TLC2932IPW	
IC303	8-759-239-55	IC TC74HC123AF	
IC304	8-759-430-32	IC TLC2933IPW-E20	
IC500	8-752-386-52	IC CXD2070Q	
IC501	8-759-422-80	IC MN47V77ST1	
IC502	8-759-422-80	IC MN47V77ST1	
IC700	8-752-384-06	IC CXD2062Q	
IC701	8-759-393-55	IC MC74F244MEL	
IC702	8-759-393-55	IC MC74F244MEL	
IC900	8-752-053-21	IC CXA1211M	
IC901	8-752-053-21	IC CXA1211M	

Ref.No.	Part No.	Description	Remark
IC902	8-752-386-47	IC CXD2071R	
IC903	8-752-053-21	IC CXA1211M	
	<COIL>		
L2	1-412-533-21	INDUCTOR 47μH	
L3	1-412-533-21	INDUCTOR 47μH	
L5	1-412-058-11	INDUCTOR CHIP 10μH	
L102	1-414-754-11	INDUCTOR 10μH	
L103	1-414-754-11	INDUCTOR 10μH	
L300	1-414-754-11	INDUCTOR 10μH	
L301	1-414-754-11	INDUCTOR 10μH	
L302	1-414-754-11	INDUCTOR 10μH	
L303	1-414-757-11	INDUCTOR 100μH	
L304	1-414-754-11	INDUCTOR 10μH	
L305	1-414-754-11	INDUCTOR 10μH	
L306	1-414-754-11	INDUCTOR 10μH	
L307	1-414-754-11	INDUCTOR 10μH	
L308	1-414-757-11	INDUCTOR 100μH	
L309	1-414-757-11	INDUCTOR 100μH	
L310	1-414-757-11	INDUCTOR 100μH	
L311	1-414-757-11	INDUCTOR 100μH	
L312	1-414-754-11	INDUCTOR 10μH	
L500	1-414-754-11	INDUCTOR 10μH	
L501	1-414-754-11	INDUCTOR 10μH	
L700	1-414-754-11	INDUCTOR 10μH	
L701	1-414-754-11	INDUCTOR 10μH	
L702	1-414-754-11	INDUCTOR 10μH	
L900	1-414-754-11	INDUCTOR 10μH	
L901	1-414-754-11	INDUCTOR 10μH	
	<TRANSISTOR>		
Q103	8-729-230-49	TRANSISTOR 2SC2712-YG	
Q104	8-729-230-49	TRANSISTOR 2SC2712-YG	
Q105	8-729-230-49	TRANSISTOR 2SC2712-YG	
Q106	8-729-230-49	TRANSISTOR 2SC2712-YG	
Q107	8-729-230-49	TRANSISTOR 2SC2712-YG	
Q108	8-729-230-49	TRANSISTOR 2SC2712-YG	
Q111	8-729-230-49	TRANSISTOR 2SC2712-YG	
Q112	8-729-230-49	TRANSISTOR 2SC2712-YG	
Q113	8-729-230-49	TRANSISTOR 2SC2712-YG	
Q300	8-729-216-22	TRANSISTOR 2SA1162-G	
Q301	8-729-216-22	TRANSISTOR 2SA1162-G	
Q302	8-729-216-22	TRANSISTOR 2SA1162-G	
Q303	8-729-230-49	TRANSISTOR 2SC2712-YG	
Q304	8-729-230-49	TRANSISTOR 2SC2712-YG	
Q305	8-729-230-49	TRANSISTOR 2SC2712-YG	
Q306	8-729-216-22	TRANSISTOR 2SA1162-G	
Q900	8-729-230-49	TRANSISTOR 2SC2712-YG	
Q901	8-729-216-22	TRANSISTOR 2SA1162-G	
Q902	8-729-216-22	TRANSISTOR 2SA1162-G	
Q903	8-729-230-49	TRANSISTOR 2SC2712-YG	
Q904	8-729-216-22	TRANSISTOR 2SA1162-G	
Q905	8-729-230-49	TRANSISTOR 2SC2712-YG	

Ref.No.	Part No.	Description			Remark
	<RESISTOR>				
R1	1-216-446-00	METAL OXIDE	18	5%	2W F
R2	1-216-073-00	RES,CHIP	10K	5%	1/10W
R3	1-216-073-00	RES,CHIP	10K	5%	1/10W
R4	1-216-049-91	RES,CHIP	1K	5%	1/10W
R5	1-216-025-91	RES,CHIP	100	5%	1/10W
R6	1-216-025-91	RES,CHIP	100	5%	1/10W
R7	1-216-446-00	METAL OXIDE	18	5%	2W F
R14	1-216-025-91	RES,CHIP	100	5%	1/10W
R15	1-216-025-91	RES,CHIP	100	5%	1/10W
R16	1-216-049-91	RES,CHIP	1K	5%	1/10W
R17	1-216-073-00	RES,CHIP	10K	5%	1/10W
R18	1-216-025-91	RES,CHIP	100	5%	1/10W
R19	1-216-073-00	RES,CHIP	10K	5%	1/10W
R20	1-216-073-00	RES,CHIP	10K	5%	1/10W
R21	1-216-073-00	RES,CHIP	10K	5%	1/10W
R22	1-216-073-00	RES,CHIP	10K	5%	1/10W
R23	1-216-073-00	RES,CHIP	10K	5%	1/10W
R101	1-216-025-91	RES,CHIP	100	5%	1/10W
R102	1-216-025-91	RES,CHIP	100	5%	1/10W
R108	1-216-025-91	RES,CHIP	100	5%	1/10W
R113	1-216-669-11	METAL CHIP	5.6K	0.50%	1/10W
R118	1-216-053-00	RES,CHIP	1.5K	5%	1/10W
R119	1-216-645-11	METAL CHIP	560	0.50%	1/10W
R120	1-216-075-00	RES,CHIP	12K	5%	1/10W
R121	1-216-079-00	RES,CHIP	18K	5%	1/10W
R122	1-216-295-91	SHORT 0			
R123	1-216-025-91	RES,CHIP	100	5%	1/10W
R124	1-216-049-91	RES,CHIP	1K	5%	1/10W
R125	1-216-645-11	METAL CHIP	560	0.50%	1/10W
R128	1-216-669-11	METAL CHIP	5.6K	0.50%	1/10W
R129	1-216-075-00	RES,CHIP	12K	5%	1/10W
R130	1-216-053-00	RES,CHIP	1.5K	5%	1/10W
R131	1-216-295-91	SHORT 0			
R132	1-216-025-91	RES,CHIP	100	5%	1/10W
R135	1-216-049-91	RES,CHIP	1K	5%	1/10W
R136	1-216-645-11	METAL CHIP	560	0.50%	1/10W
R138	1-216-669-11	METAL CHIP	5.6K	0.50%	1/10W
R139	1-216-075-00	RES,CHIP	12K	5%	1/10W
R140	1-216-053-00	RES,CHIP	1.5K	5%	1/10W
R142	1-216-079-00	RES,CHIP	18K	5%	1/10W
R143	1-216-295-91	SHORT 0			
R144	1-216-025-91	RES,CHIP	100	5%	1/10W
R145	1-216-079-00	RES,CHIP	18K	5%	1/10W
R146	1-216-049-91	RES,CHIP	1K	5%	1/10W
R153	1-216-085-00	RES,CHIP	33K	5%	1/10W
R154	1-216-025-91	RES,CHIP	100	5%	1/10W
R155	1-216-089-91	RES,CHIP	47K	5%	1/10W
R156	1-216-025-91	RES,CHIP	100	5%	1/10W
R157	1-216-049-91	RES,CHIP	1K	5%	1/10W
R158	1-216-025-91	RES,CHIP	100	5%	1/10W
R159	1-216-085-00	RES,CHIP	33K	5%	1/10W
R160	1-216-025-91	RES,CHIP	100	5%	1/10W
R161	1-216-089-91	RES,CHIP	47K	5%	1/10W
R162	1-216-025-91	RES,CHIP	100	5%	1/10W
R163	1-216-049-91	RES,CHIP	1K	5%	1/10W
R164	1-216-085-00	RES,CHIP	33K	5%	1/10W
R165	1-216-025-91	RES,CHIP	100	5%	1/10W

BB PB

Ref.No.	Part No.	Description			Remark
R166	1-216-025-91	RES,CHIP	100	5%	1/10W
R167	1-216-089-91	RES,CHIP	47K	5%	1/10W
R168	1-216-025-91	RES,CHIP	100	5%	1/10W
R169	1-216-049-91	RES,CHIP	1K	5%	1/10W
R300	1-216-025-91	RES,CHIP	100	5%	1/10W
R301	1-216-295-91	SHORT 0			
R302	1-216-295-91	SHORT 0			
R303	1-216-621-11	METAL CHIP	56	0.50%	1/10W
R304	1-216-621-11	METAL CHIP	56	0.50%	1/10W
R305	1-216-621-11	METAL CHIP	56	0.50%	1/10W
R306	1-216-621-11	METAL CHIP	56	0.50%	1/10W
R307	1-216-091-00	RES,CHIP	56K	5%	1/10W
R308	1-216-077-00	RES,CHIP	15K	5%	1/10W
R309	1-216-624-11	METAL CHIP	75	0.50%	1/10W
R310	1-216-077-00	RES,CHIP	15K	5%	1/10W
R311	1-216-623-11	METAL CHIP	68	0.50%	1/10W
R312	1-216-624-11	METAL CHIP	75	0.50%	1/10W
R313	1-216-037-00	RES,CHIP	330	5%	1/10W
R314	1-216-081-00	RES,CHIP	22K	5%	1/10W
R315	1-216-623-11	METAL CHIP	68	0.50%	1/10W
R316	1-216-621-11	METAL CHIP	56	0.50%	1/10W
R317	1-216-621-11	METAL CHIP	56	0.50%	1/10W
R318	1-216-621-11	METAL CHIP	56	0.50%	1/10W
R319	1-216-621-11	METAL CHIP	56	0.50%	1/10W
R320	1-216-025-91	RES,CHIP	100	5%	1/10W
R321	1-216-037-00	RES,CHIP	330	5%	1/10W
R322	1-216-025-91	RES,CHIP	100	5%	1/10W
R323	1-216-295-91	SHORT 0			
R324	1-216-037-00	RES,CHIP	330	5%	1/10W
R325	1-216-097-91	RES,CHIP	100K	5%	1/10W
R326	1-216-025-91	RES,CHIP	100	5%	1/10W
R327	1-216-037-00	RES,CHIP	330	5%	1/10W
R328	1-216-037-00	RES,CHIP	330	5%	1/10W
R329	1-216-077-00	RES,CHIP	15K	5%	1/10W
R330	1-216-295-91	SHORT 0			
R331	1-216-295-91	SHORT 0			
R332	1-216-066-00	RES,CHIP	5.1K	5%	1/10W
R335	1-216-665-11	METAL CHIP	3.9K	0.50%	1/10W
R336	1-216-049-91	RES,CHIP	1K	5%	1/10W
R337	1-216-057-00	RES,CHIP	2.2K	5%	1/10W
R338	1-216-295-91	SHORT 0			
R340	1-216-073-00	RES,CHIP	10K	5%	1/10W
R341	1-216-061-00	RES,CHIP	3.3K	5%	1/10W
R342	1-216-047-91	RES,CHIP	820	5%	1/10W
R343	1-216-049-91	RES,CHIP	1K	5%	1/10W
R344	1-216-117-00	RES,CHIP	680K	5%	1/10W
R345	1-216-117-00	RES,CHIP	680K	5%	1/10W
R346	1-216-062-00	RES,CHIP	3.6K	5%	1/10W
R347	1-216-025-91	RES,CHIP	100	5%	1/10W
R348	1-216-113-00	RES,CHIP	470K	5%	1/10W
R349	1-216-025-91	RES,CHIP	100	5%	1/10W
R350	1-216-651-11	METAL CHIP	1K	0.50%	1/10W
R352	1-216-113-00	RES,CHIP	470K	5%	1/10W
R353	1-216-081-00	RES,CHIP	22K	5%	1/10W
R354	1-216-033-00	RES,CHIP	220	5%	1/10W
R355	1-216-057-00	RES,CHIP	2.2K	5%	1/10W
R357	1-216-061-00	RES,CHIP	3.3K	5%	1/10W
R500	1-216-295-91	SHORT 0			
R503	1-216-295-91	SHORT 0			
R505	1-216-295-91	SHORT 0			
R506	1-216-295-91	SHORT 0			
R508	1-216-295-91	SHORT 0			
R700	1-216-639-11	METAL CHIP	330	0.50%	1/10W
R701	1-216-639-11	METAL CHIP	330	0.50%	1/10W
R702	1-216-647-11	METAL CHIP	680	0.50%	1/10W
R703	1-216-647-11	METAL CHIP	680	0.50%	1/10W
R901	1-216-295-91	SHORT 0			
R902	1-216-295-91	SHORT 0			
R905	1-216-295-91	SHORT 0			
R906	1-216-049-91	RES,CHIP	1K	5%	1/10W
R908	1-216-025-91	RES,CHIP	100	5%	1/10W
R909	1-216-025-91	RES,CHIP	100	5%	1/10W
R910	1-216-295-91	SHORT 0			
R911	1-216-295-91	SHORT 0			
R913	1-216-049-91	RES,CHIP	1K	5%	1/10W
R914	1-216-049-91	RES,CHIP	1K	5%	1/10W
R915	1-216-049-91	RES,CHIP	1K	5%	1/10W
R916	1-216-049-91	RES,CHIP	1K	5%	1/10W
R917	1-216-049-91	RES,CHIP	1K	5%	1/10W
R918	1-216-061-00	RES,CHIP	3.3K	5%	1/10W
R919	1-216-663-11	METAL CHIP	3.3K	0.50%	1/10W
R920	1-216-659-11	METAL CHIP	2.2K	0.50%	1/10W
R921	1-216-635-11	METAL CHIP	220	0.50%	1/10W
R922	1-216-635-11	METAL CHIP	220	0.50%	1/10W
R923	1-216-634-11	METAL CHIP	200	0.50%	1/10W
R924	1-216-053-00	RES,CHIP	1.5K	5%	1/10W
R925	1-216-635-11	METAL CHIP	220	0.50%	1/10W
R926	1-216-635-11	METAL CHIP	220	0.50%	1/10W
R927	1-216-634-11	METAL CHIP	200	0.50%	1/10W
R928	1-216-053-00	RES,CHIP	1.5K	5%	1/10W
R929	1-216-635-11	METAL CHIP	220	0.50%	1/10W
R930	1-216-635-11	METAL CHIP	220	0.50%	1/10W
R931	1-216-634-11	METAL CHIP	200	0.50%	1/10W
R932	1-216-053-00	RES,CHIP	1.5K	5%	1/10W

<VARIABLE RESISTOR>

RV900	1-241-764-11	RES, ADJ, CERMET 10K
RV901	1-241-764-11	RES, ADJ, CERMET 10K
RV902	1-241-764-11	RES, ADJ, CERMET 10K

****

* A-1190-327-A PB MOUNTED PC BOARD
****

1-202-826-00	SOLID	4.7K	10%	1/2W
1-202-826-00	SOLID	4.7K	10%	1/2W
1-202-826-00	SOLID	4.7K	20%	1/2W
1-202-826-00	SOLID	4.7K	20%	1/2W
1-202-826-00	SOLID	4.7K	20%	1/2W
1-202-826-00	SOLID	4.7K	20%	1/2W
4-042-892-01	CAP, MV			
4-042-892-01	CAP, MV			
* 7-322-065-72	RUBBER, RTV (SE-9168) (130G)			
* 7-322-065-72	RUBBER, RTV (SE-9168) (130G)			

Ref.No.	Part No.	Description	Remark
	8-719-054-69	DIODE ESJA09-12T3.5	
	8-719-054-69	DIODE ESJA09-12T3.5	
	8-719-058-28	DIODE DHM3UB120-T	
	8-719-058-28	DIODE DHM3UB120-T	
	<CONNECTOR>		
CN241	* 1-564-506-11	PLUG, CONNECTOR 3P	
CN241	* 1-564-506-11	PLUG, CONNECTOR 3P	
	<FLYBACK TRANSFORMER>		
FBT10	⚠X-4033-245-1	TRANSFORMER ASSY, FLYBACK (L) (NX3031//J1S) (L=300)	
	⚠X-4034-325-1	TRANSFORMER ASSY, FLYBACK (R) (NX3031//J1X) (L=270)	
FBT11	⚠X-4033-245-1	TRANSFORMER ASSY, FLYBACK (R) (NX3031//J1S) (L=300)	
	⚠X-4034-326-1	TRANSFORMER ASSY, FLYBACK (L) (NX3031//J1W) (L=330)	
	<NEON LAMP>		
NL10	1-519-108-99	LAMP, NEON	
NL10	1-519-108-99	LAMP, NEON	
NL11	1-519-108-99	LAMP, NEON	
NL11	1-519-108-99	LAMP, NEON	

****

	* A-1195-142-A	PE COMPLETE PC BOARD			
		**********			
	4-382-854-11	SCREW (M3X10), P, SW (+)			
	* 7-322-065-72	RUBBER, RTV (SE-9168) (130G)			
	<CAPACITOR>				
C2	1-107-906-11	ELECT	10μF	20%	50V
C4	1-164-004-11	CERAMIC CHIP	0.1μF	10%	25V
C5	1-107-909-11	ELECT	47μF	20%	50V
C9	1-107-906-11	ELECT	10μF	20%	50V
C13	1-107-906-11	ELECT	10μF	20%	50V
C14	1-126-935-11	ELECT	470μF	20%	16V
C16	1-164-489-11	CERAMIC CHIP	0.22μF	10%	16V
C19	1-126-795-11	ELECT	10μF	20%	50V
C20	1-104-666-11	ELECT	220μF	20%	25V
C21	1-104-666-11	ELECT	220μF	20%	25V
C22	1-104-666-11	ELECT	220μF	20%	25V
C23	1-104-666-11	ELECT	220μF	20%	25V
C24	1-126-942-61	ELECT	1000μF	20%	25V
C25	1-126-942-61	ELECT	1000μF	20%	25V
C26	1-126-942-61	ELECT	1000μF	20%	25V
C27	1-126-942-61	ELECT	1000μF	20%	25V
C500	1-126-943-11	ELECT	2200μF	20%	25V
C501	1-126-933-11	ELECT	100μF	20%	16V
C502	1-126-969-11	ELECT	220μF	20%	50V
C503	1-126-933-11	ELECT	100μF	20%	16V
C504	1-104-665-11	ELECT	100μF	20%	25V
C505	1-126-969-11	ELECT	220μF	20%	50V
C506	1-126-929-11	ELECT	4700μF	20%	10V
C507	1-126-929-11	ELECT	4700μF	20%	10V
C508	1-123-024-21	ELECT	33μF		160V
C509	1-126-964-11	ELECT	10μF	20%	50V
C511	1-136-169-00	FILM	0.22μF	5%	50V
C515	1-136-613-11	FILM	0.0068μF	3%	2KV
C516	1-137-370-11	FILM	0.01μF	5%	50V
C517	1-126-964-11	ELECT	10μF	20%	50V
C518	1-102-244-00	CERAMIC	220PF	10%	500V
C519	1-136-103-00	FILM	0.1μF	5%	200V
C520	1-126-929-11	ELECT	4700μF	20%	10V
C521	1-136-085-00	FILM	0.016μF	3%	2KV
C523	1-126-964-11	ELECT	10μF	20%	50V
C527	1-163-021-91	CERAMIC CHIP	0.01μF	10%	50V
C528	1-126-960-11	ELECT	1μF	20%	50V
C529	1-126-964-11	ELECT	10μF	20%	50V
C532	1-163-021-91	CERAMIC CHIP	0.01μF	10%	50V
C541	1-107-662-11	ELECT	22μF	20%	250V
C542	1-107-651-11	ELECT	4.7μF	20%	250V
C543	1-107-651-11	ELECT	4.7μF	20%	250V
	<CONNECTOR>				
CN99	* 1-564-710-11	PIN, CONNECTOR (SMALL TYPE) 8P			
CN100	* 1-564-711-11	PIN, CONNECTOR (SMALL TYPE) 9P			
CN101	* 1-564-711-11	PIN, CONNECTOR (ULTRA SMALL)9P			
CN102	* 1-564-706-11	PIN, CONNECTOR (SMALL TYPE) 4P			
CN103	* 1-508-766-00	PIN, CONNECTOR (5MM PITCH) 4P			
CN104	* 1-564-506-11	PLUG, CONNECTOR 3P			
CN105	* 1-564-506-11	PLUG, CONNECTOR 3P			
CN106	* 1-564-506-11	PLUG, CONNECTOR 3P			
CN107	* 1-564-506-11	PLUG, CONNECTOR 3P			
	<DIODE>				
D4	8-719-801-78	DIODE 1SS184			
D6	8-719-801-78	DIODE 1SS184			
D500	8-719-801-78	DIODE 1SS184			
D501	8-719-900-95	DIODE V09G			
D502	8-719-801-78	DIODE 1SS184			
D503	8-719-979-58	DIODE EGP10D			
D504	8-719-979-58	DIODE EGP10D			
D505	8-719-054-86	DIODE ERC88M-009			
D506	8-719-054-86	DIODE ERC88M-009			
D508	8-719-900-95	DIODE V09G			
D511	8-719-901-19	DIODE V11N			
D512	8-719-054-86	DIODE ERC88M-009			
D513	8-719-801-78	DIODE 1SS184			
D514	8-719-801-78	DIODE 1SS184			
D515	8-719-801-78	DIODE 1SS184			
D516	8-719-801-78	DIODE 1SS184			
D517	8-719-801-78	DIODE 1SS184			
D518	8-719-801-78	DIODE 1SS184			
D519	8-719-801-78	DIODE 1SS184			
D522	8-719-801-78	DIODE 1SS184			
D524	8-719-801-78	DIODE 1SS184			
D525	8-719-979-58	DIODE EGP10D			
D526	8-719-900-95	DIODE V09G			
D527	8-719-801-78	DIODE 1SS184			

PE

Ref.No.	Part No.	Description				Remark
	<FERRITE BEAD>					
FB500	1-410-396-41	FERRITE 0.45μH				
FB501	1-410-396-41	FERRITE 0.45μH				
	<IC>					
IC2	8-759-947-34	IC LM35DZ				
IC3	8-759-100-96	IC UPC4558G2				
IC5	8-759-908-15	IC TL431CLP				
IC6	8-759-100-96	IC UPC4558G2				
IC500	8-759-231-58	IC TA7812S				
IC501	8-759-929-65	IC LM7912CT				
IC504	8-759-100-96	IC UPC4558G2				
IC505	8-759-100-96	IC UPC4558G2				
	<COIL>					
L500	1-412-533-21	INDUCTOR 47μH				
L501	1-412-533-21	INDUCTOR 47μH				
L502	1-412-533-21	INDUCTOR 47μH				
	<TRANSISTOR>					
Q3	8-729-140-97	TRANSISTOR 2SB734-34				
Q5	8-729-033-97	TRANSISTOR 2SB1566E				
Q6	1-801-806-11	TRANSISTOR DTC144EKA-T146				
Q7	1-801-806-11	TRANSISTOR DTC144EKA-T146				
Q8	1-801-806-11	TRANSISTOR DTC144EKA-T146				
Q9	1-801-806-11	TRANSISTOR DTC144EKA-T146				
Q10	1-801-806-11	TRANSISTOR DTC144EKA-T146				
Q500	8-729-821-87	TRANSISTOR 2SD1878-CA				
Q502	8-729-802-71	TRANSISTOR 2SA1407-D				
Q503	1-801-806-11	TRANSISTOR DTC144EKA-T146				
Q504	8-729-119-80	TRANSISTOR 2SC2688-LK				
Q505	8-729-230-49	TRANSISTOR 2SC2712-YG				
Q507	8-729-216-22	TRANSISTOR 2SA1162-G				
Q508	8-729-230-49	TRANSISTOR 2SC2712-YG				
Q509	8-729-031-68	TRANSISTOR 2SC4630LS				
Q510	8-729-216-22	TRANSISTOR 2SA1162-G				
Q511	8-729-230-49	TRANSISTOR 2SC2712-YG				
Q513	8-729-031-68	TRANSISTOR 2SC4630LS				
Q514	8-729-216-22	TRANSISTOR 2SA1162-G				
Q515	8-729-230-49	TRANSISTOR 2SC2712-YG				
Q516	8-729-230-49	TRANSISTOR 2SC2712-YG				
Q519	8-729-031-68	TRANSISTOR 2SC4630LS				
Q521	8-729-216-22	TRANSISTOR 2SA1162-G				
Q522	8-729-230-49	TRANSISTOR 2SC2712-YG				
Q524	8-729-801-88	TRANSISTOR 2SA1381-E				
Q525	8-729-230-49	TRANSISTOR 2SC2712-YG				
	<RESISTOR>					
R1	1-216-025-91	RES,CHIP	100	5%	1/10W	
R2	1-216-667-11	METAL CHIP	4.7K	0.50%	1/10W	
R3	1-216-685-11	METAL CHIP	27K	0.50%	1/10W	
R4	1-216-055-00	RES,CHIP	1.8K	5%	1/10W	
R5	1-216-049-91	RES,CHIP	1K	5%	1/10W	
R6	1-216-049-91	RES,CHIP	1K	5%	1/10W	
R12	1-216-651-11	METAL CHIP	1K	0.50%	1/10W	
R16	1-216-049-91	RES,CHIP	1K	5%	1/10W	
R17	1-216-073-00	RES,CHIP	10K	5%	1/10W	
R22	1-216-647-11	METAL CHIP	680	0.50%	1/10W	
R24	1-216-451-11	METAL OXIDE	120	5%	2W	F
R25	1-216-067-00	RES,CHIP	5.6K	5%	1/10W	
R34	1-215-886-11	METAL OXIDE	100	5%	2W	F
R36	1-216-067-00	RES,CHIP	5.6K	5%	1/10W	
R40	1-216-675-11	METAL CHIP	10K	0.50%	1/10W	
R41	1-216-667-11	METAL CHIP	4.7K	0.50%	1/10W	
R46	1-216-049-91	RES,CHIP	1K	5%	1/10W	
R47	1-216-089-91	RES,CHIP	47K	5%	1/10W	
R48	1-216-049-91	RES,CHIP	1K	5%	1/10W	
R49	1-216-049-91	RES,CHIP	1K	5%	1/10W	
R50	1-216-049-91	RES,CHIP	1K	5%	1/10W	
R51	1-216-049-91	RES,CHIP	1K	5%	1/10W	
R52	1-216-105-91	RES,CHIP	220K	5%	1/10W	
R53	1-216-105-91	RES,CHIP	220K	5%	1/10W	
R54	1-216-105-91	RES,CHIP	220K	5%	1/10W	
R55	1-216-105-91	RES,CHIP	220K	5%	1/10W	
R56	1-215-908-00	METAL OXIDE	33	5%	3W	F
R57	1-215-908-00	METAL OXIDE	33	5%	3W	F
R58	1-215-908-00	METAL OXIDE	33	5%	3W	F
R59	1-215-908-00	METAL OXIDE	33	5%	3W	F
R61	1-216-049-91	RES,CHIP	1K	5%	1/10W	
R62	1-216-059-00	RES,CHIP	2.7K	5%	1/10W	
R63	1-216-368-11	METAL OXIDE	0.82	5%	2W	F
R64	1-216-669-11	METAL CHIP	5.6K	0.50%	1/10W	
R65	1-216-651-11	METAL CHIP	1K	0.50%	1/10W	
R66	1-216-681-11	METAL CHIP	18K	0.50%	1/10W	
R500	1-260-294-11	CARBON	1.5	5%	1/2W	
R501	1-216-025-91	RES,CHIP	100	5%	1/10W	
R504	1-249-417-11	CARBON	1K	5%	1/4W	F
R505	1-215-923-00	METAL OXIDE	10K	5%	3W	F
R506	1-216-073-00	RES,CHIP	10K	5%	1/10W	
R507	1-216-353-00	METAL OXIDE	2.2	5%	1W	F
R508	1-216-041-00	RES,CHIP	470	5%	1/10W	
R511	1-249-420-11	CARBON	1.8K	5%	1/4W	F
R512	1-216-097-91	RES,CHIP	100K	5%	1/10W	
R513	1-260-300-11	CARBON	4.7	5%	1/2W	
R514	1-260-300-11	CARBON	4.7	5%	1/2W	
R515	1-216-049-91	RES,CHIP	1K	5%	1/10W	
R517	1-216-057-00	RES,CHIP	2.2K	5%	1/10W	
R518	1-249-417-11	CARBON	1K	5%	1/4W	F
R519	1-260-300-11	CARBON	4.7	5%	1/2W	
R521	1-220-824-11	CARBON	270K	5%	1/2W	
R522	1-220-824-11	CARBON	270K	5%	1/2W	
R523	1-220-824-11	CARBON	270K	5%	1/2W	
R525	1-220-824-11	CARBON	270K	5%	1/2W	
R526	1-220-824-11	CARBON	270K	5%	1/2W	
R527	1-220-824-11	CARBON	270K	5%	1/2W	
R528	1-216-073-00	RES,CHIP	10K	5%	1/10W	
R529	1-220-824-11	CARBON	270K	5%	1/2W	
R530	1-220-824-11	CARBON	270K	5%	1/2W	
R531	1-220-824-11	CARBON	270K	5%	1/2W	
R532	1-216-089-91	RES,CHIP	47K	5%	1/10W	
R533	1-216-089-91	RES,CHIP	47K	5%	1/10W	
R534	1-219-743-11	CARBON	100	5%	1/2W	
R538	1-216-089-91	RES,CHIP	47K	5%	1/10W	

Ref.No.	Part No.	Description			Remark
R539	1-219-752-11	CARBON	100K	5%	1/2W
R540	1-216-073-00	RES,CHIP	10K	5%	1/10W
R541	1-216-089-91	RES,CHIP	47K	5%	1/10W
R542	1-216-025-91	RES,CHIP	100	5%	1/10W
R543	1-216-061-00	RES,CHIP	3.3K	5%	1/10W
R544	1-216-025-91	RES,CHIP	100	5%	1/10W
R545	1-216-089-91	RES,CHIP	47K	5%	1/10W
R546	1-216-093-91	RES,CHIP	68K	5%	1/10W
R547	1-216-065-91	RES,CHIP	4.7K	5%	1/10W
R548	1-216-097-91	RES,CHIP	100K	5%	1/10W
R549	1-216-097-91	RES,CHIP	100K	5%	1/10W
R550	1-216-073-00	RES,CHIP	10K	5%	1/10W
R551	1-216-113-00	RES,CHIP	470K	5%	1/10W
R552	1-216-073-00	RES,CHIP	10K	5%	1/10W
R555	1-219-743-11	CARBON	100	5%	1/2W
R556	1-219-752-11	CARBON	100K	5%	1/2W
R557	1-216-089-91	RES,CHIP	47K	5%	1/10W
R558	1-216-061-00	RES,CHIP	3.3K	5%	1/10W
R559	1-216-089-91	RES,CHIP	47K	5%	1/10W
R560	1-216-073-00	RES,CHIP	10K	5%	1/10W
R561	1-216-073-00	RES,CHIP	10K	5%	1/10W
R562	1-216-065-91	RES,CHIP	4.7K	5%	1/10W
R563	1-216-113-00	RES,CHIP	470K	5%	1/10W
R569	1-219-743-11	CARBON	100	5%	1/2W
R570	1-219-752-11	CARBON	100K	5%	1/2W
R571	1-216-089-91	RES,CHIP	47K	5%	1/10W
R572	1-216-065-91	RES,CHIP	4.7K	5%	1/10W
R573	1-216-061-00	RES,CHIP	3.3K	5%	1/10W
R574	1-216-089-91	RES,CHIP	47K	5%	1/10W
R575	1-216-073-00	RES,CHIP	10K	5%	1/10W
R576	1-216-097-91	RES,CHIP	100K	5%	1/10W
R578	1-216-097-91	RES,CHIP	100K	5%	1/10W
R579	1-216-065-91	RES,CHIP	4.7K	5%	1/10W
R580	1-216-073-00	RES,CHIP	10K	5%	1/10W
R581	1-216-077-00	RES,CHIP	15K	5%	1/10W
R582	1-216-113-00	RES,CHIP	470K	5%	1/10W
R588	1-249-429-11	CARBON	10K	5%	1/4W F
R589	1-216-049-91	RES,CHIP	1K	5%	1/10W
R590	1-216-065-91	RES,CHIP	4.7K	5%	1/10W
R591	1-216-049-91	RES,CHIP	1K	5%	1/10W
R616	1-216-065-91	RES,CHIP	4.7K	5%	1/10W
	<SPARK GAP>				
SG1	1-519-504-11	GAP, DISCHARGE			
	<TRANSFORMER>				
T500	1-437-078-00	TRANSFORMER, HORIZONTAL DRIVE			
T501	1-433-521-11	TRANSFORMER, FERRITE (LOT)			
	<TEST PIN>				
TP500	* 1-537-864-11	PIN, POST			
TP501	* 1-537-864-11	PIN, POST			
TP502	* 1-537-864-11	PIN, POST			
TP503	* 1-537-864-11	PIN, POST			
TP504	* 1-537-864-11	PIN, POST			
TP505	* 1-537-864-11	PIN, POST			

****

Ref.No.	Part No.	Description			Remark
	* A-1195-143-A	PA COMPLETE PC BOARD			
		**********			
	3-701-809-31	SCREW, TERMINAL (M3X8)			
	4-056-081-01	HOLDER (EBA), TR			
	* 4-353-708-00	HOOK, FINGER			
	4-382-854-11	SCREW (M3X10), P, SW (+)			
	<CAPACITOR>				
C1	1-126-933-11	ELECT	100μF	20%	16V
C2	1-126-943-11	ELECT	2200μF	20%	25V
C3	1-126-933-11	ELECT	100μF	20%	16V
C4	1-104-665-11	ELECT	100μF	20%	25V
C10	1-126-942-61	ELECT	1000μF	20%	25V
C11	1-104-666-11	ELECT	220μF	20%	25V
C100	1-126-968-11	ELECT	100μF	20%	50V
C101	1-126-968-11	ELECT	100μF	20%	50V
C102	1-126-964-11	ELECT	10μF	20%	50V
C103	1-137-366-11	FILM	0.0022μF	5%	50V
C104	1-137-366-11	FILM	0.0022μF	5%	50V
C105	1-130-471-00	FILM	0.001μF	5%	50V
C106	1-126-767-11	ELECT	1000μF	20%	16V
C107	1-126-767-11	ELECT	1000μF	20%	16V
C108	1-130-471-00	FILM	0.001μF	5%	50V
C109	1-136-169-00	FILM	0.22μF	5%	50V
C110	1-102-978-00	CERAMIC	220PF	5%	50V
C111	1-136-169-00	FILM	0.22μF	5%	50V
C150	1-104-664-11	ELECT	47μF	20%	16V
C151	1-126-933-11	ELECT	100μF	20%	16V
C152	1-126-933-11	ELECT	100μF	20%	16V
C153	1-136-169-00	FILM	0.22μF	5%	50V
C154	1-101-004-00	CERAMIC	0.01μF		50V
C155	1-102-123-00	CERAMIC	0.0033μF	10%	50V
C156	1-101-004-00	CERAMIC	0.01μF		50V
C157	1-102-116-00	CERAMIC	680PF	10%	50V
C158	1-137-366-11	FILM	0.0022μF	5%	50V
C159	1-137-366-11	FILM	0.0022μF	5%	50V
C160	1-102-002-00	CERAMIC	680PF	10%	500V
C200	1-126-964-11	ELECT	10μF	20%	50V
C201	1-126-964-11	ELECT	10μF	20%	50V
C202	1-126-963-11	ELECT	4.7μF	20%	50V
C203	1-126-963-11	ELECT	4.7μF	20%	50V
C204	1-126-964-11	ELECT	10μF	20%	50V
C205	1-101-004-00	CERAMIC	0.01μF		50V
C250	1-136-169-00	FILM	0.22μF	5%	50V
C251	1-126-967-11	ELECT	47μF	20%	50V
C252	1-126-964-11	ELECT	10μF	20%	50V
C253	1-101-004-00	CERAMIC	0.01μF		50V
C300	1-104-664-11	ELECT	47μF	20%	16V
C301	1-104-664-11	ELECT	47μF	20%	16V
C302	1-107-906-11	ELECT	10μF	20%	16V
C303	1-102-973-00	CERAMIC	100PF	5%	50V
C500	1-126-933-11	ELECT	100μF	20%	16V
C501	1-126-949-11	ELECT	220μF	20%	35V

PA

Ref.No.	Part No.	Description			Remark
C502	1-126-948-11	ELECT	100μF	20%	35V
C503	1-104-665-11	ELECT	100μF	20%	25V
C504	1-136-153-00	FILM	0.01μF	5%	50V
C505	1-128-551-11	ELECT	22μF	20%	25V
C506	1-162-318-11	CERAMIC	0.001μF	10%	500V
C507	1-126-948-11	ELECT	100μF	20%	35V
C508	1-102-129-00	CERAMIC	0.01μF	10%	50V
C509	1-102-129-00	CERAMIC	0.01μF	10%	50V
C600	1-127-684-11	ELECT MELF	820μF	20%	250V
C601	1-127-684-11	ELECT MELF	820μF	20%	250V
C602	1-127-684-11	ELECT MELF	820μF	20%	250V
C603	1-127-684-11	ELECT MELF	820μF	20%	250V
C604	1-136-165-00	FILM	0.1μF	5%	50V
C605	1-136-165-00	FILM	0.1μF	5%	50V
C606	1-136-165-00	FILM	0.1μF	5%	50V
C607	⚠1-117-845-11	FILM	16000PF	3%	1.5KV
C608	⚠1-117-845-11	FILM	16000PF	3%	1.5KV
C609	1-129-718-00	FILM	0.022μF	5%	630V
C610	⚠1-136-729-11	FILM	1.5μF	5%	400V
C611	⚠1-136-729-11	FILM	1.5μF	5%	400V
C612	1-104-999-11	FILM	0.1μF	5%	200V
C613	1-104-999-11	FILM	0.1μF	5%	200V
	<CONNECTOR>				
CN86	* 1-564-712-11	PIN, CONNECTOR (SMALL TYPE)10P			
CN87	* 1-564-509-11	PLUG, CONNECTOR 6P			
CN88	* 1-564-508-11	PLUG, CONNECTOR 5P			
CN89	* 1-750-916-11	PIN, CONNECTOR(DY)(PC BOARD)8P			
CN90	* 1-750-916-11	PIN, CONNECTOR(DY)(PC BOARD)8P			
CN91	* 1-564-506-11	PLUG, CONNECTOR 3P			
CN93	* 1-564-506-11	PLUG, CONNECTOR 3P			
	<DIODE>				
D1	8-719-911-19	DIODE 1SS119-25			
D2	8-719-900-95	DIODE V09G			
D3	8-719-911-19	DIODE 1SS119-25			
D100	8-719-911-19	DIODE 1SS119-25			
D101	8-719-110-36	DIODE RD13ESB2			
D102	8-719-110-36	DIODE RD13ESB2			
D103	8-719-911-19	DIODE 1SS119-25			
D104	8-719-911-19	DIODE 1SS119-25			
D105	8-719-911-19	DIODE 1SS119-25			
D150	8-719-911-19	DIODE 1SS119-25			
D151	8-719-911-19	DIODE 1SS119-25			
D152	8-719-911-19	DIODE 1SS119-25			
D200	8-719-911-19	DIODE 1SS119-25			
D201	8-719-911-19	DIODE 1SS119-25			
D202	8-719-109-85	DIODE RD5.1ESB2			
D250	8-719-110-36	DIODE RD13ESB2			
D251	8-719-027-19	DIODE MVR3368S			
D252	8-719-911-19	DIODE 1SS119-25			
D253	8-719-911-19	DIODE 1SS119-25			
D300	8-719-110-22	DIODE RD11ESB2			
D301	8-719-110-22	DIODE RD11ESB2			
D500	8-719-911-19	DIODE 1SS119-25			
D600	8-719-900-95	DIODE V09G			
D601	8-719-110-53	DIODE RD20ESB2			

Ref.No.	Part No.	Description	Remark
D602	8-719-110-53	DIODE RD20ESB2	
D603	8-719-900-95	DIODE V09G	
D604	8-719-110-53	DIODE RD20ESB2	
D605	8-719-110-53	DIODE RD20ESB2	
D606	8-719-900-95	DIODE V09G	
D607	8-719-110-53	DIODE RD20ESB2	
D608	8-719-110-53	DIODE RD20ESB2	
D609	8-719-059-41	DIODE DD82RC-SONY	
D610	8-719-059-41	DIODE DD82RC-SONY	
	<FERRITE BEAD>		
FB600	1-410-396-41	FERRITE 0.45μH	
FB601	1-410-396-41	FERRITE 0.45μH	
FB602	1-410-396-41	FERRITE 0.45μH	
FB603	1-410-396-41	FERRITE 0.45μH	
FB604	1-410-396-41	FERRITE 0.45μH	
FB605	1-410-396-41	FERRITE 0.45μH	
	<IC>		
IC1	8-759-231-58	IC TA7812S	
IC2	8-759-929-65	IC LM7912CT	
IC100	8-759-908-15	IC TL431CLP	
IC101	8-759-503-91	IC TL082ACP	
IC102	8-759-503-91	IC TL082ACP	
IC150	8-759-103-93	IC UPC393C	
IC151	8-759-708-05	IC NJM78L05A	
IC152	8-759-906-24	IC SN74LS624N	
IC153	8-759-901-23	IC SN74LS123N	
IC154	8-759-336-45	IC PST574C-T	
IC200	8-759-103-93	IC UPC393C	
IC250	8-759-908-15	IC TL431CLP	
IC251	8-759-103-93	IC UPC393C	
IC300	8-759-503-91	IC TL082ACP	
IC301	8-759-503-91	IC TL082ACP	
IC302	8-759-145-58	IC UPC4558C	
IC500	8-759-708-12	IC NJM78L12A	
	<COIL>		
L1	1-406-663-21	INDUCTOR 47μH	
L2	1-406-663-21	INDUCTOR 47μH	
L500	1-406-663-21	INDUCTOR 47μH	
L600	1-406-973-21	INDUCTOR 22μH	
L601	⚠1-416-872-11	INDUCTOR 420μH	
L602	⚠1-416-872-11	INDUCTOR 420μH	
L603	⚠1-416-872-11	INDUCTOR 420μH	
L604	⚠1-416-872-11	INDUCTOR 420μH	
L605	1-406-656-21	INDUCTOR 3.3μH	
L606	1-406-656-21	INDUCTOR 3.3μH	
	<PHOTO COUPLER>		
PH500	8-749-014-92	IC TLP558	

Ref.No.	Part No.	Description				Remark
	<TRANSISTOR>					
Q10	8-729-030-02	TRANSISTOR DTC144ESA				
Q11	8-729-030-02	TRANSISTOR DTC144ESA				
Q100	8-729-119-78	TRANSISTOR 2SC2785-HFE				
Q150	8-729-119-76	TRANSISTOR 2SA1175-HFE				
Q151	8-729-119-76	TRANSISTOR 2SA1175-HFE				
Q152	8-729-119-76	TRANSISTOR 2SA1175-HFE				
Q153	8-729-119-78	TRANSISTOR 2SC2785-HFE				
Q154	8-729-119-78	TRANSISTOR 2SC2785-HFE				
Q155	8-729-119-78	TRANSISTOR 2SC2785-HFE				
Q200	8-729-119-78	TRANSISTOR 2SC2785-HFE				
Q201	8-729-119-78	TRANSISTOR 2SC2785-HFE				
Q202	8-729-119-78	TRANSISTOR 2SC2785-HFE				
Q203	8-729-119-78	TRANSISTOR 2SC2785-HFE				
Q204	8-729-119-78	TRANSISTOR 2SC2785-HFE				
Q250	8-729-040-55	TRANSISTOR 2SK1482-T				
Q251	8-729-030-02	TRANSISTOR DTC144ESA				
Q252	8-729-030-02	TRANSISTOR DTC144ESA				
Q500	8-729-119-78	TRANSISTOR 2SC2785-HFE				
Q501	8-729-119-76	TRANSISTOR 2SA1175-HFE				
Q502	8-729-119-78	TRANSISTOR 2SC2785-HFE				
Q503	8-729-207-82	TRANSISTOR 2SC3421-Y				
Q504	8-729-207-89	TRANSISTOR 2SA1358-Y				
Q505	8-729-207-82	TRANSISTOR 2SC3421-Y				
Q506	8-729-207-89	TRANSISTOR 2SA1358-Y				
Q507	8-729-207-82	TRANSISTOR 2SC3421-Y				
Q508	8-729-207-89	TRANSISTOR 2SA1358-Y				
Q600	8-729-045-55	TRANSISTOR 2SK2349-CB				
Q601	8-729-045-55	TRANSISTOR 2SK2349-CB				
Q602	8-729-045-55	TRANSISTOR 2SK2349-CB				
	<RESISTOR>					
R10	1-247-887-00	CARBON	220K	5%	1/4W	
R11	1-249-429-11	CARBON	10K	5%	1/4W	
R12	1-249-429-11	CARBON	10K	5%	1/4W	
R13	1-247-807-31	CARBON	100	5%	1/4W	
R14	1-215-908-00	METAL OXIDE	33	5%	3W	F
R100	1-249-429-11	CARBON	10K	5%	1/4W	
R101	1-249-417-11	CARBON	1K	5%	1/4W	
R102	1-249-417-11	CARBON	1K	5%	1/4W	
R103	1-215-447-00	METAL	12K	1%	1/4W	
R104	1-215-447-00	METAL	12K	1%	1/4W	
R105	1-215-455-00	METAL	27K	1%	1/4W	
R106	1-215-456-00	METAL	30K	1%	1/4W	
R107	1-215-445-00	METAL	10K	1%	1/4W	
R108	1-249-411-11	CARBON	330	5%	1/4W	
R109	1-247-807-31	CARBON	100	5%	1/4W	
R110	1-249-437-11	CARBON	47K	5%	1/4W	
R111	1-249-417-11	CARBON	1K	5%	1/4W	
R112	1-249-417-11	CARBON	1K	5%	1/4W	
R114	1-249-431-11	CARBON	15K	5%	1/4W	
R115	1-247-903-00	CARBON	1M	5%	1/4W	
R116	1-249-439-11	CARBON	68K	5%	1/4W	
R117	1-249-417-11	CARBON	1K	5%	1/4W	
R118	1-249-417-11	CARBON	1K	5%	1/4W	
R119	1-249-413-11	CARBON	470	5%	1/4W	
R120	1-215-465-00	METAL	68K	1%	1/4W	
R121	1-215-443-00	METAL	8.2K	1%	1/4W	
R122	1-249-429-11	CARBON	10K	5%	1/4W	
R123	1-249-425-11	CARBON	4.7K	5%	1/4W	
R150	1-249-429-11	CARBON	10K	5%	1/4W	
R151	1-247-863-91	CARBON	22K	5%	1/4W	
R152	1-249-420-11	CARBON	1.8K	5%	1/4W	
R153	1-249-425-11	CARBON	4.7K	5%	1/4W	
R154	1-216-450-00	METAL OXIDE	82	5%	2W	F
R155	1-215-441-00	METAL	6.8K	1%	1/4W	
R156	1-215-441-00	METAL	6.8K	1%	1/4W	
R157	1-215-457-00	METAL	33K	1%	1/4W	
R158	1-215-459-00	METAL	39K	1%	1/4W	
R159	1-249-429-11	CARBON	10K	5%	1/4W	
R160	1-249-417-11	CARBON	1K	5%	1/4W	
R161	1-249-437-11	CARBON	47K	5%	1/4W	
R162	1-249-441-11	CARBON	100K	5%	1/4W	
R163	1-249-437-11	CARBON	47K	5%	1/4W	
R164	1-249-441-11	CARBON	100K	5%	1/4W	
R165	1-249-429-11	CARBON	10K	5%	1/4W	
R166	1-249-425-11	CARBON	4.7K	5%	1/4W	
R167	1-249-417-11	CARBON	1K	5%	1/4W	
R200	1-215-469-00	METAL	100K	1%	1/4W	
R201	1-215-467-00	METAL	82K	1%	1/4W	
R202	1-215-469-00	METAL	100K	1%	1/4W	
R203	1-247-863-91	CARBON	22K	5%	1/4W	
R204	1-249-429-11	CARBON	10K	5%	1/4W	
R205	1-215-469-00	METAL	100K	1%	1/4W	
R206	1-215-467-00	METAL	82K	1%	1/4W	
R207	1-215-469-00	METAL	100K	1%	1/4W	
R208	1-247-863-91	CARBON	22K	5%	1/4W	
R209	1-249-429-11	CARBON	10K	5%	1/4W	
R210	1-249-437-11	CARBON	47K	5%	1/4W	
R211	1-249-436-11	CARBON	39K	5%	1/4W	
R212	1-249-440-11	CARBON	82K	5%	1/4W	
R213	1-249-441-11	CARBON	100K	5%	1/4W	
R214	1-249-441-11	CARBON	100K	5%	1/4W	
R215	1-249-439-11	CARBON	68K	5%	1/4W	
R216	1-247-863-91	CARBON	22K	5%	1/4W	
R217	1-249-425-11	CARBON	4.7K	5%	1/4W	
R218	1-249-425-11	CARBON	4.7K	5%	1/4W	
R219	1-247-807-31	CARBON	100	5%	1/4W	
R250	1-249-417-11	CARBON	1K	5%	1/4W	
R251	1-215-441-00	METAL	6.8K	1%	1/4W	
R252	1-215-431-00	METAL	2.7K	1%	1/4W	
R253	1-249-429-11	CARBON	10K	5%	1/4W	
R254	1-249-441-11	CARBON	100K	5%	1/4W	
R255	1-249-417-11	CARBON	1K	5%	1/4W	
R256	1-249-429-11	CARBON	10K	5%	1/4W	
R257	1-249-441-11	CARBON	100K	5%	1/4W	
R258	1-249-429-11	CARBON	10K	5%	1/4W	
R259	1-249-429-11	CARBON	10K	5%	1/4W	
R260	1-249-425-11	CARBON	4.7K	5%	1/4W	
R261	1-249-429-11	CARBON	10K	5%	1/4W	
R262	1-247-807-31	CARBON	100	5%	1/4W	
R300	1-249-417-11	CARBON	1K	5%	1/4W	
R301	1-215-453-00	METAL	22K	1%	1/4W	
R302	1-249-417-11	CARBON	1K	5%	1/4W	
R303	1-215-453-00	METAL	22K	1%	1/4W	
R304	1-215-445-00	METAL	10K	1%	1/4W	

PA PD

Ref.No.	Part No.	Description				Remark
R305	1-215-437-00	METAL	4.7K	1%	1/4W	
R306	1-215-445-00	METAL	10K	1%	1/4W	
R307	1-215-437-00	METAL	4.7K	1%	1/4W	
R308	1-215-445-00	METAL	10K	1%	1/4W	
R309	1-249-437-11	CARBON	47K	5%	1/4W	
R310	1-249-417-11	CARBON	1K	5%	1/4W	
R311	1-247-863-91	CARBON	22K	5%	1/4W	
R312	1-249-417-11	CARBON	1K	5%	1/4W	
R313	1-249-435-11	CARBON	33K	5%	1/4W	
R314	1-249-417-11	CARBON	1K	5%	1/4W	
R315	1-249-417-11	CARBON	1K	5%	1/4W	
R316	1-247-807-31	CARBON	100	5%	1/4W	
R500	1-216-455-11	METAL OXIDE	560	5%	2W	F
R501	1-249-417-11	CARBON	1K	5%	1/4W	
R502	1-249-417-11	CARBON	1K	5%	1/4W	
R503	1-249-417-11	CARBON	1K	5%	1/4W	
R504	1-249-417-11	CARBON	1K	5%	1/4W	
R505	1-216-435-11	METAL OXIDE	2.7K	5%	1W	F
R506	1-247-727-11	CARBON	10	5%	1/2W	F
R507	1-249-401-11	CARBON	47	5%	1/4W	
R508	1-249-401-11	CARBON	47	5%	1/4W	
R509	1-249-401-11	CARBON	47	5%	1/4W	
R600	1-216-448-11	METAL OXIDE	39	5%	2W	F
R601	1-215-869-11	METAL OXIDE	1K	5%	1W	F
R602	1-216-448-11	METAL OXIDE	39	5%	2W	F
R603	1-215-869-11	METAL OXIDE	1K	5%	1W	F
R604	1-216-448-11	METAL OXIDE	39	5%	2W	F
R605	1-215-869-11	METAL OXIDE	1K	5%	1W	F
R606	1-215-906-11	METAL OXIDE	15	5%	3W	F
R607	1-215-906-11	METAL OXIDE	15	5%	3W	F
R608	1-215-906-11	METAL OXIDE	15	5%	3W	F
R609	1-215-906-11	METAL OXIDE	15	5%	3W	F
R610	1-215-906-11	METAL OXIDE	15	5%	3W	F
R612	1-214-880-00	METAL	4.7K	1%	1/2W	
R613	1-214-880-00	METAL	4.7K	1%	1/2W	
R614	⚠1-202-933-61	FUSIBLE	0.1	10%	1/2W	F
R615	⚠1-202-933-61	FUSIBLE	0.1	10%	1/2W	F
R616	⚠1-202-933-61	FUSIBLE	0.1	10%	1/2W	F
R617	⚠1-202-933-61	FUSIBLE	0.1	10%	1/2W	F
R618	⚠1-202-933-61	FUSIBLE	0.1	10%	1/2W	F
R619	⚠1-202-933-61	FUSIBLE	0.1	10%	1/2W	F

<VARIABLE RESISTOR>

⊠RV100 ⚠		RES, ADJ, CERMET 20K
RV101	1-238-802-11	RES, ADJ, CERMET 10K
RV150	1-238-802-11	RES, ADJ, CERMET 10K
⊠RV250 ⚠		RES, ADJ, CERMET 1K

<TEST PIN>

TP1	* 1-537-864-11	PIN, POST
TP2	* 1-537-864-11	PIN, POST
TP3	* 1-537-864-11	PIN, POST
TP103	* 1-537-864-11	PIN, POST
TP150	* 1-537-864-11	PIN, POST
TP151	* 1-537-864-11	PIN, POST
TP152	* 1-537-864-11	PIN, POST
TP300	* 1-537-864-11	PIN, POST
TP600	* 1-537-864-11	PIN, POST
TP601	* 1-537-864-11	PIN, POST

****

* A-1195-144-A PD COMPLETE PC BOARD
****

4-382-854-11	SCREW (M3X10), P, SW (+)	
4-393-406-01	SHEET (R), RADIATION	

<CAPACITOR>

Ref.No.	Part No.	Description			Remark
C500	1-126-943-11	ELECT	2200μF	20%	25V
C501	1-126-933-11	ELECT	100μF	20%	16V
C502	1-126-964-11	ELECT	10μF	20%	50V
C510	1-126-960-11	ELECT	1μF	20%	50V
C514	1-101-004-00	CERAMIC	0.01μF		50V
C522	1-101-004-00	CERAMIC	0.01μF		50V
C524	1-102-973-00	CERAMIC	100PF	5%	50V
C525	1-102-973-00	CERAMIC	100PF	5%	50V
C526	1-102-973-00	CERAMIC	100PF	5%	50V
C530	1-126-963-11	ELECT	4.7μF	20%	50V
C531	1-101-004-00	CERAMIC	0.01μF		50V
C533	1-136-165-00	FILM	0.1μF	5%	50V
C534	1-136-165-00	FILM	0.1μF	5%	50V
C535	1-136-165-00	FILM	0.1μF	5%	50V
C536	1-123-024-21	ELECT	33μF		160V
C537	1-123-024-21	ELECT	33μF		160V
C538	1-102-973-00	CERAMIC	100PF	5%	50V
C539	1-101-004-00	CERAMIC	0.01μF		50V
C540	1-136-153-00	FILM	0.01μF	5%	50V
C544	1-136-153-00	FILM	0.01μF	5%	50V
C545	1-109-889-11	ELECT	1μF	20%	50V
C546	1-130-471-00	FILM	0.001μF	5%	50V
C547	1-126-933-11	ELECT	100μF	20%	16V
C548	1-126-933-11	ELECT	100μF	20%	16V
C549	1-136-165-00	FILM	0.1μF	5%	50V
C550	1-101-004-00	CERAMIC	0.01μF		50V
C551	1-126-960-11	ELECT	1μF	20%	50V
C552	1-125-538-11	ELECT(BLOCK)	1000μF	20%	200V
C553	1-136-159-00	FILM	0.033μF	5%	50V
C554	1-102-973-00	CERAMIC	100PF	5%	50V
C555	1-126-964-11	ELECT	10μF	20%	50V
C556	1-136-153-00	FILM	0.01μF	5%	50V
C557	1-126-965-11	ELECT	22μF	20%	50V

<CONNECTOR>

CN96	* 1-564-706-11	PIN, CONNECTOR (SMALL TYPE) 4P
CN97	* 1-508-786-00	PIN, CONNECTOR (5MM PITCH) 2P
CN98	* 1-564-705-11	PIN, CONNECTOR (SMALL TYPE) 3P

<DIODE>

D500	8-719-911-19	DIODE 1SS119-25
D501	8-719-900-95	DIODE V09G
D520	8-719-911-19	DIODE 1SS119-25
D521	8-719-911-19	DIODE 1SS119-25

Ref.No.	Part No.	Description				Remark
D523	8-719-911-19	DIODE 1SS119-25				
D527	8-719-043-14	DIODE ESAD39M-06C				
D528	8-719-911-19	DIODE 1SS119-25				
D529	8-719-911-19	DIODE 1SS119-25				
D530	8-719-911-19	DIODE 1SS119-25				
D531	8-719-110-36	DIODE RD13ESB2				
	<FERRITE BEAD>					
FB502	1-410-396-41	FERRITE 0.45μH				
FB503	1-410-396-41	FERRITE 0.45μH				
FB504	1-410-396-41	FERRITE 0.45μH				
FB505	1-410-396-41	FERRITE 0.45μH				
	<IC>					
IC500	8-759-231-58	IC TA7812S				
IC502	8-759-240-40	IC TC4040BP				
IC503	8-759-045-72	IC MC14572UBCP				
IC506	8-759-103-93	IC UPC393C				
IC507	8-759-100-75	IC UPC1394C				
	<COIL>					
L500	1-412-533-21	INDUCTOR 47μH				
L503	1-406-664-21	INDUCTOR 68μH				
L504	1-410-686-11	INDUCTOR 1mH				
L505	1-411-566-11	INDUCTOR 1mH				
	<TRANSISTOR>					
Q501	8-729-119-78	TRANSISTOR 2SC2785-HFE				
Q506	8-729-119-76	TRANSISTOR 2SA1175-HFE				
Q512	8-729-119-76	TRANSISTOR 2SA1175-HFE				
Q517	8-729-030-02	TRANSISTOR DTC144ESA				
Q518	8-729-119-78	TRANSISTOR 2SC2785-HFE				
Q520	8-729-030-02	TRANSISTOR DTC144ESA				
Q523	8-729-119-76	TRANSISTOR 2SA1175-HFE				
Q525	8-729-119-76	TRANSISTOR 2SA1175-HFE				
Q526	8-729-033-57	TRANSISTOR IRFP350LF20				
Q527	8-729-119-78	TRANSISTOR 2SC2785-HFE				
Q528	8-729-140-96	TRANSISTOR 2SD774-34				
Q529	8-729-140-97	TRANSISTOR 2SB734-34				
Q530	8-729-105-74	TRANSISTOR 2SK523-M1				
	<RESISTOR>					
R501	1-249-437-11	CARBON	47K	5%	1/4W	
R502	1-249-437-11	CARBON	47K	5%	1/4W	
R503	1-247-863-91	CARBON	22K	5%	1/4W	
R504	1-249-437-11	CARBON	47K	5%	1/4W	
R505	1-249-429-11	CARBON	10K	5%	1/4W	
R506	1-249-421-11	CARBON	2.2K	5%	1/4W	
R507	1-249-429-11	CARBON	10K	5%	1/4W	
R516	1-249-417-11	CARBON	1K	5%	1/4W	
R520	1-247-843-11	CARBON	3.3K	5%	1/4W	
R524	1-249-417-11	CARBON	1K	5%	1/4W	
R535	1-249-425-11	CARBON	4.7K	5%	1/4W	
R536	1-247-903-00	CARBON	1M	5%	1/4W	
R553	1-247-843-11	CARBON	3.3K	5%	1/4W	
R554	1-249-417-11	CARBON	1K	5%	1/4W	
R564	1-247-807-31	CARBON	100	5%	1/4W	
R565	1-249-436-11	CARBON	39K	5%	1/4W	
R566	1-249-436-11	CARBON	39K	5%	1/4W	
R567	1-249-436-11	CARBON	39K	5%	1/4W	
R568	1-249-429-11	CARBON	10K	5%	1/4W	
R577	1-249-417-11	CARBON	1K	5%	1/4W	
R584	1-247-807-31	CARBON	100	5%	1/4W	
R585	1-249-426-11	CARBON	5.6K	5%	1/4W	
R586	1-249-413-11	CARBON	470	5%	1/4W	
R587	1-249-417-11	CARBON	1K	5%	1/4W	
R589	1-249-399-11	CARBON	33	5%	1/4W	
R590	1-249-425-11	CARBON	4.7K	5%	1/4W	
R591	1-215-445-00	METAL	10K	1%	1/4W	
R592	1-247-895-91	CARBON	470K	5%	1/4W	
R593	1-247-863-91	CARBON	22K	5%	1/4W	
R594	1-215-866-11	METAL OXIDE	330	5%	1W	F
R595	1-249-421-11	CARBON	2.2K	5%	1/4W	
R596	1-247-863-91	CARBON	22K	5%	1/4W	
R597	1-249-431-11	CARBON	15K	5%	1/4W	
R598	1-215-445-00	METAL	10K	1%	1/4W	
R599	1-249-420-11	CARBON	1.8K	5%	1/4W	
R600	1-247-863-91	CARBON	22K	5%	1/4W	
R601	1-249-429-11	CARBON	10K	5%	1/4W	
R602	1-247-863-91	CARBON	22K	5%	1/4W	
R603	1-249-425-11	CARBON	4.7K	5%	1/4W	
R604	1-249-429-11	CARBON	10K	5%	1/4W	
R605	1-249-426-11	CARBON	5.6K	5%	1/4W	
R606	1-249-429-11	CARBON	10K	5%	1/4W	
R607	1-216-381-11	METAL OXIDE	0.22	5%	3W	F
R608	1-216-381-11	METAL OXIDE	0.22	5%	3W	F
R609	1-249-429-11	CARBON	10K	5%	1/4W	
R610	1-249-429-11	CARBON	10K	5%	1/4W	
R611	1-249-429-11	CARBON	10K	5%	1/4W	
R612	1-249-441-11	CARBON	100K	5%	1/4W	
R613	1-249-425-11	CARBON	4.7K	5%	1/4W	
R614	1-249-425-11	CARBON	4.7K	5%	1/4W	
R615	1-249-401-11	CARBON	47	5%	1/4W	F
R616	1-249-417-11	CARBON	1K	5%	1/4W	
	<TRANSFORMER>					
T502	1-424-290-11	TRANSFORMER, DRIVE				
	<TEST PIN>					
TP500	* 1-537-864-11	PIN, POST				
TP501	* 1-537-864-11	PIN, POST				
TP503	* 1-537-864-11	PIN, POST				
TP504	* 1-537-864-11	PIN, POST				
TP505	* 1-537-864-11	PIN, POST				
	<CRYSTAL>					
X500	1-578-768-11	VIBLATOR, CERAMIC				

F M

Ref.No.	Part No.	Description				Remark
**********						
	* A-1245-598-A	F COMPLETE PC BOARD				
		**********				
	* 4-353-708-00	HOOK, FINGER				
	<CAPACITOR>					
C1	⚠1-104-706-51	FILM	0.22μF	20%	250V	
C2	⚠1-104-708-51	FILM	0.47μF	20%	250V	
C4	⚠1-117-699-51	CERAMIC	0.001μF	99%	250V	
C5	⚠1-117-699-51	CERAMIC	0.001μF	99%	250V	
C7	⚠1-107-533-51	FILM	1μF	20%	250V	
C8	⚠1-104-706-51	FILM	0.22μF	20%	250V	
C9	⚠1-104-706-51	FILM	0.22μF	20%	250V	
C10	⚠1-117-699-51	CERAMIC	0.001μF	99%	250V	
C12	⚠1-117-699-51	CERAMIC	0.001μF	99%	250V	
C34	⚠1-104-706-51	FILM	0.22μF	20%	250V	
C35	⚠1-104-708-51	FILM	0.47μF	20%	250V	
C37	⚠1-117-699-51	CERAMIC	0.001μF	99%	250V	
C38	⚠1-117-699-51	CERAMIC	0.001μF	99%	250V	
C40	⚠1-107-533-51	FILM	1μF	20%	250V	
C41	⚠1-104-706-51	FILM	0.22μF	20%	250V	
C42	⚠1-104-706-51	FILM	0.22μF	20%	250V	
C43	⚠1-117-699-51	CERAMIC	0.001μF	99%	250V	
C45	⚠1-117-699-51	CERAMIC	0.001μF	99%	250V	
	<CONNECTOR>					
CN1	* 1-535-419-00	TAB, FASTEN (PCB)				
CN2	* 1-778-891-11	CONNECTOR, BOARD TO BOARD				
CN3	* 1-535-419-00	TAB, FASTEN (PCB)				
CN4	* 1-535-419-00	TAB, FASTEN (PCB)				
CN5	* 1-535-419-00	TAB, FASTEN (PCB)				
CN6	* 1-535-419-00	TAB, FASTEN (PCB)				
	<DIODE>					
D1	⚠8-719-921-20	DIODE 1SS119-25				
D4	⚠8-719-921-20	DIODE 1SS119-25				
	<FUSE>					
F1	⚠1-533-694-11	FUSE (10A/250V) (G90U/G90M)				
	* 1-533-701-11	HOLDER, FUSE				
	* 1-533-703-11	CAP, FUSE (G90U/G90M)				
F1	⚠1-533-576-11	FUSE, TIME-LAG ((UL)ET) (G90E)				
	* 1-533-701-11	HOLDER, FUSE				
	* 1-533-702-11	CAP, FUSE (G90E)				
F3	⚠1-533-694-11	FUSE (10A/250V) (G90U/G90M)				
	* 1-533-701-11	HOLDER, FUSE				
	* 1-533-703-11	CAP, FUSE (G90U/G90M)				
F3	⚠1-533-576-11	FUSE, TIME-LAG ((UL)ET) (G90E)				
	* 1-533-701-11	HOLDER, FUSE				
	* 1-533-702-11	CAP, FUSE (G90E)				
	<COIL>					
L1	⚠1-403-675-11	INDUCTOR 34μH				
L2	⚠1-431-160-11	TRANSFORMER, LINE FILTER				
L3	⚠1-431-161-11	TRANSFORMER, LINE FILTER				
L4	⚠1-403-675-11	INDUCTOR 34μH				
L9	⚠1-403-675-11	INDUCTOR 34μH				
L10	⚠1-431-160-11	TRANSFORMER, LINE FILTER				
L11	⚠1-431-161-11	TRANSFORMER, LINE FILTER				
L12	⚠1-403-675-11	INDUCTOR 34μH				
	<RESISTOR>					
R1	⚠1-202-961-11	CEMENTED	1.8	5%	10W	
R2	⚠1-202-961-11	CEMENTED	1.8	5%	10W	
R3	⚠1-202-961-11	CEMENTED	1.8	5%	10W	
R4	⚠1-217-780-11	FUSIBLE	1	5%	5W	F
R5	⚠1-220-827-91	REGISTER	560K	5%	1/2W	
R16	⚠1-202-961-11	CEMENTED	1.8	5%	10W	
R17	⚠1-202-961-11	CEMENTED	1.8	5%	10W	
R18	⚠1-202-961-11	CEMENTED	1.8	5%	10W	
R19	⚠1-217-780-11	FUSIBLE	1	5%	5W	F
R20	⚠1-220-827-91	REGISTER	560K	5%	1/2W	
	<RELAY>					
RY1	⚠1-515-450-21	RELAY, POWER				
RY3	⚠1-515-450-21	RELAY, POWER				
	<VARISTOR>					
VDR2	⚠1-809-581-11	VARISTOR				
VDR6	⚠1-809-581-11	VARISTOR				
**********						
	* A-1304-148-A	M MOUNTED PC BOARD				
		**********				
	<CONNECTOR>					
CN508	* 1-785-520-11	PIN, CONNECTOR (PC BOARD) 22P				
CN509	* 1-785-516-11	PIN, CONNECTOR (PC BOARD) 10P				
CN510	* 1-785-515-11	PIN, CONNECTOR (PC BOARD) 8P				
CN511	* 1-785-518-11	CONNECTOR, BOARD TO BOARD 15P				
CN512	* 1-785-530-11	PIN, CONNECTOR (PC BOARD) 10P				
CN513	* 1-785-532-11	PIN, CONNECTOR (PC BOARD) 14P				
CN514	* 1-695-904-11	PIN, CONNECTOR (PC BOARD) 20P				
CN515	* 1-785-532-11	PIN, CONNECTOR (PC BOARD) 14P				
CN516	* 1-695-904-11	PIN, CONNECTOR (PC BOARD) 20P				
CN517	* 1-785-530-11	PIN, CONNECTOR (PC BOARD) 10P				
CN518	* 1-785-520-11	PIN, CONNECTOR (PC BOARD) 22P				
CN519	* 1-785-519-11	PIN, CONNECTOR (PC BOARD) 24P				
CN520	* 1-785-533-11	PIN, CONNECTOR (PC BOARD) 16P				
CN521	* 1-564-507-11	PLUG, CONNECTOR 4P				
CN522	* 1-695-904-11	PIN, CONNECTOR (PC BOARD) 20P				
CN523	* 1-785-532-11	PIN, CONNECTOR (PC BOARD) 14P				
CN524	* 1-785-519-11	PIN, CONNECTOR (PC BOARD) 24P				
CN525	* 1-785-520-11	PIN, CONNECTOR (PC BOARD) 22P				
CN526	* 1-695-904-11	PIN, CONNECTOR (PC BOARD) 20P				
CN527	* 1-785-521-11	PIN, CONNECTOR (PC BOARD) 32P				
CN528	* 1-785-531-11	PIN, CONNECTOR (PC BOARD) 12P				

Ref.No.	Part No.	Description	Remark
CN529	* 1-785-530-11	PIN, CONNECTOR (PC BOARD) 10P	
CN530	* 1-695-904-11	PIN, CONNECTOR (PC BOARD) 20P	
CN531	* 1-785-520-11	PIN, CONNECTOR (PC BOARD) 22P	
CN532	* 1-785-531-11	PIN, CONNECTOR (PC BOARD) 12P	
CN533	* 1-785-519-11	PIN, CONNECTOR (PC BOARD) 24P	
CN535	* 1-785-530-11	PIN, CONNECTOR (PC BOARD) 10P	
CN536	* 1-785-530-11	PIN, CONNECTOR (PC BOARD) 10P	
CN537	* 1-785-530-11	PIN, CONNECTOR (PC BOARD) 10P	
	<FERRITE BEAD>		
FB501	1-410-396-41	FERRITE 0.45μH	
FB502	1-410-396-41	FERRITE 0.45μH	
FB503	1-410-396-41	FERRITE 0.45μH	
FB504	1-410-396-41	FERRITE 0.45μH	
FB505	1-410-396-41	FERRITE 0.45μH	
FB506	1-410-396-41	FERRITE 0.45μH	
FB507	1-410-396-41	FERRITE 0.45μH	
FB508	1-410-396-41	FERRITE 0.45μH	
FB509	1-410-396-41	FERRITE 0.45μH	
FB510	1-410-396-41	FERRITE 0.45μH	
FB511	1-410-396-41	FERRITE 0.45μH	
FB512	1-410-396-41	FERRITE 0.45μH	
FB513	1-410-396-41	FERRITE 0.45μH	
	<RESISTOR>		
R1	1-216-398-11	METAL OXIDE 5.6 5% 3W	F
R2	1-216-398-11	METAL OXIDE 5.6 5% 3W	F
R3	1-216-398-11	METAL OXIDE 5.6 5% 3W	F
R4	1-216-398-11	METAL OXIDE 5.6 5% 3W	F
R5	1-216-398-11	METAL OXIDE 5.6 5% 3W	F
R6	1-216-398-11	METAL OXIDE 5.6 5% 3W	F
R7	1-216-398-11	METAL OXIDE 5.6 5% 3W	F
R8	1-216-398-11	METAL OXIDE 5.6 5% 3W	F
R9	1-216-398-11	METAL OXIDE 5.6 5% 3W	F
R10	1-216-483-11	METAL OXIDE 2.7K 5% 3W	F
R11	1-216-483-11	METAL OXIDE 2.7K 5% 3W	F

****

* A-1304-149-A MA MOUNTED PC BOARD
****

Ref.No.	Part No.	Description	Remark
	<CONNECTOR>		
CN600	* 1-778-891-11	CONNECTOR, BOARD TO BOARD	
CN601	* 1-778-891-11	CONNECTOR, BOARD TO BOARD	
	<JACK>		
J1	1-568-547-11	JACK, MINIATUER PIN	
J2	1-568-547-11	JACK, MINIATUER PIN	
J3	1-568-547-11	JACK, MINIATUER PIN	

****

* A-1304-150-A MB MOUNTED PC BOARD
****

Ref.No.	Part No.	Description	Remark
	<CONNECTOR>		
CN701	* 1-778-891-11	CONNECTOR, BOARD TO BOARD	

****

* A-1304-151-A MC MOUNTED PC BOARD
****

Ref.No.	Part No.	Description	Remark
	<CONNECTOR>		
CN703	* 1-778-891-11	CONNECTOR, BOARD TO BOARD	

****

* A-1304-152-A MD MOUNTED PC BOARD
****

Ref.No.	Part No.	Description	Remark
CN711	* 1-564-522-11	PLUG, CONNECTOR 7P	
CN712	* 1-564-521-11	PLUG, CONNECTOR 6P	
CN713	* 1-564-520-11	PLUG, CONNECTOR 5P	
CN714	* 1-564-518-11	PLUG, CONNECTOR 3P	

****

* A-1304-153-A ME MOUNTED PC BOARD
****

Ref.No.	Part No.	Description	Remark
	<CAPACITOR>		
C101	⚠1-126-960-91	ELECT 1μF 20% 50V	
	<CONNECTOR>		
CN2	* 1-766-917-11	PIN,CONNECTOR (DY)(PC BOARD) 5P	
CN3	* 1-564-519-11	PLUG, CONNECTOR 4P	
	<TRANSISTOR>		
Q101	⚠8-729-140-99	TRANSISTOR 2SB734-34	
Q102	⚠8-729-423-33	TRANSISTOR 2SC2785-HFE	
	<RESISTOR>		
R101	⚠1-215-884-71	METAL OXIDE 47 5% 2W	F
R102	⚠1-215-884-71	METAL OXIDE 47 5% 2W	F
R103	⚠1-247-819-91	CARBON 330 5% 1/4W	
R104	⚠1-247-839-91	CARBON 2.2K 5% 1/4W	
R105	⚠1-247-855-91	CARBON 10K 5% 1/4W	
R106	⚠1-247-855-91	CARBON 10K 5% 1/4W	

GA

Ref.No.	Part No.	Description				Remark
**********						
	* A-1316-410-A	GA COMPLETE PC BOARD (Include GAA Mounted PC BOARD) **********				
	4-034-094-01	SHEET, INSULATOR				
	* 4-067-811-01	HOLDER (G)				
	4-382-854-11	SCREW (M3X10), P, SW (+)				
	7-685-648-79	SCREW +BVTP 3X12 TYPE2 N-S				
	<CAPACITOR>					
C1	1-117-228-11	FILM	2.2μF	10%	450V	
C2	1-117-228-11	FILM	2.2μF	10%	450V	
C3	1-117-228-11	FILM	2.2μF	10%	450V	
C4	1-117-228-11	FILM	2.2μF	10%	450V	
C5	1-107-913-11	ELECT	470μF	20%	50V	
C6	1-125-601-11	ELECT(BLOCK)	470μF	20%	450V	
C7	1-125-601-11	ELECT(BLOCK)	470μF	20%	450V	
C8	⚠1-104-706-51	FILM	0.22μF	20%	250V	
C21	1-117-228-11	FILM	2.2μF	10%	450V	
C22	1-117-228-11	FILM	2.2μF	10%	450V	
C23	1-117-228-11	FILM	2.2μF	10%	450V	
C24	1-117-228-11	FILM	2.2μF	10%	450V	
C25	1-107-913-11	ELECT	470μF	20%	50V	
C26	1-125-601-11	ELECT(BLOCK)	470μF	20%	450V	
C27	1-125-601-11	ELECT(BLOCK)	470μF	20%	450V	
C28	⚠1-104-706-51	FILM	0.22μF	20%	250V	
	<CONNECTOR>					
CN10	* 1-766-917-11	PIN,CONNECTOR (DY)(PC BOARD)5P				
CN11	* 1-785-514-11	PIN, CONNECTOR (PC BOARD) 6P				
CN12	* 1-564-506-11	PLUG, CONNECTOR 3P				
CN13	* 1-564-506-11	PLUG, CONNECTOR 3P				
CN14	* 1-785-518-11	CONNECTOR, BOARD TO BOARD 15P				
CN15	* 1-785-518-11	CONNECTOR, BOARD TO BOARD 15P				
	<DIODE>					
D1	⚠8-719-060-53	DIODE RBV-2506				
D4	8-719-044-70	DIODE S16L60				
D5	8-719-510-02	DIODE D1NS4				
D6	8-719-510-02	DIODE D1NS4				
D7	8-719-510-02	DIODE D1NS4				
D21	⚠8-719-060-53	DIODE RBV-2506				
D24	8-719-044-70	DIODE S16L60				
D25	8-719-510-02	DIODE D1NS4				
D26	8-719-510-02	DIODE D1NS4				
D27	8-719-510-02	DIODE D1NS4				
	<FERRITE BEAD>					
FB1	1-410-396-41	FERRITE 0.45μH				
FB2	1-410-396-41	FERRITE 0.45μH				
FB3	1-410-396-41	FERRITE 0.45μH				
FB4	1-410-396-41	FERRITE 0.45μH				
FB5	1-410-396-41	FERRITE 0.45μH				
FB6	1-410-396-41	FERRITE 0.45μH				

Ref.No.	Part No.	Description				Remark
	<IC>					
IC101	8-759-458-28	IC UC2854N				
IC102	8-759-135-80	IC UPC358C				
	<COIL>					
L2	1-403-675-11	INDUCTOR 34μH				
L3	1-403-675-11	INDUCTOR 34μH				
L5	1-416-874-11	INDUCTOR 420μH				
L6	1-416-874-11	INDUCTOR 420μH				
	<TRANSISTOR>					
Q1	8-729-041-01	TRANSISTOR 2SK2198				
Q2	8-729-041-01	TRANSISTOR 2SK2198				
Q3	8-729-188-23	TRANSISTOR 2SD882-P				
Q4	8-729-177-22	TRANSISTOR 2SB772-Q				
Q5	8-729-041-01	TRANSISTOR 2SK2198				
Q6	8-729-188-23	TRANSISTOR 2SD882-P				
Q7	8-729-177-22	TRANSISTOR 2SB772-Q				
Q8	8-729-188-23	TRANSISTOR 2SD882-P				
Q9	8-729-177-22	TRANSISTOR 2SB772-Q				
Q21	8-729-041-01	TRANSISTOR 2SK2198				
Q22	8-729-041-01	TRANSISTOR 2SK2198				
Q23	8-729-188-23	TRANSISTOR 2SD882-P				
Q24	8-729-177-22	TRANSISTOR 2SB772-Q				
Q25	8-729-041-01	TRANSISTOR 2SK2198				
Q26	8-729-188-23	TRANSISTOR 2SD882-P				
Q27	8-729-177-22	TRANSISTOR 2SB772-Q				
Q28	8-729-188-23	TRANSISTOR 2SD882-P				
Q29	8-729-177-22	TRANSISTOR 2SB772-Q				
	<RESISTOR>					
R1	1-249-405-11	CARBON	100	5%	1/4W	F
R2	1-215-904-11	METAL OXIDE	100K	5%	2W	F
R3	1-219-718-11	CEMENTED	0.1	10%	5W	
R4	1-219-718-11	CEMENTED	0.1	10%	5W	
R5	1-219-718-11	CEMENTED	0.1	10%	5W	
R6	1-249-421-11	CARBON	2.2K	5%	1/4W	
R7	1-249-401-11	CARBON	47	5%	1/4W	
R8	1-249-421-11	CARBON	2.2K	5%	1/4W	
R9	1-249-421-11	CARBON	2.2K	5%	1/4W	
R10	1-249-381-11	CARBON	1	5%	1/4W	F
R11	1-249-381-11	CARBON	1	5%	1/4W	F
R12	1-249-381-11	CARBON	1	5%	1/4W	F
R13	1-249-401-11	CARBON	47	5%	1/4W	
R14	1-249-401-11	CARBON	47	5%	1/4W	F
R15	1-249-401-11	CARBON	47	5%	1/4W	F
R16	1-249-401-11	CARBON	47	5%	1/4W	F
R17	1-249-401-11	CARBON	47	5%	1/4W	
R20	1-215-904-11	METAL OXIDE	100K	5%	2W	F
R21	1-215-904-11	METAL OXIDE	100K	5%	2W	F
R22	1-215-904-11	METAL OXIDE	100K	5%	2W	F
R41	1-249-405-11	CARBON	100	5%	1/4W	F
R43	1-219-718-11	CEMENTED	0.1	10%	5W	
R44	1-219-718-11	CEMENTED	0.1	10%	5W	

Ref.No.	Part No.	Description			Remark
R45	1-219-718-11	CEMENTED	0.1	10%	5W
R46	1-249-421-11	CARBON	2.2K	5%	1/4W
R47	1-249-401-11	CARBON	47	5%	1/4W
R48	1-249-421-11	CARBON	2.2K	5%	1/4W
R49	1-249-421-11	CARBON	2.2K	5%	1/4W
R50	1-249-381-11	CARBON	1	5%	1/4W F
R51	1-249-381-11	CARBON	1	5%	1/4W F
R52	1-249-381-11	CARBON	1	5%	1/4W F
R53	1-249-401-11	CARBON	47	5%	1/4W
R54	1-249-401-11	CARBON	47	5%	1/4W F
R55	1-249-401-11	CARBON	47	5%	1/4W F
R56	1-249-401-11	CARBON	47	5%	1/4W F
R57	1-249-401-11	CARBON	47	5%	1/4W
	<THERMAL SWITCH>				
TS1	1-692-110-11	SWITCH, THERMAL GUARD			
TS3	1-692-110-11	SWITCH, THERMAL GUARD			

****

* A-1311-704-A GAA MOUNTED PC BOARD
****

	<CAPACITOR>				
C101	1-136-165-00	FILM	0.1μF	5%	50V
C102	1-137-194-81	FILM	0.47μF	5%	50V
C103	1-136-169-00	FILM	0.22μF	5%	50V
C104	1-164-004-11	CERAMIC CHIP	0.1μF	10%	25V
C105	1-164-004-11	CERAMIC CHIP	0.1μF	10%	25V
C106	1-164-004-11	CERAMIC CHIP	0.1μF	10%	25V
C107	1-163-263-11	CERAMIC CHIP	330PF	5%	50V
C108	1-163-009-11	CERAMIC CHIP	0.001μF	10%	50V
C109	1-163-251-11	CERAMIC CHIP	100PF	5%	50V
C110	1-164-004-11	CERAMIC CHIP	0.1μF	10%	25V
C111	1-163-009-11	CERAMIC CHIP	0.001μF	10%	50V
C112	1-164-004-11	CERAMIC CHIP	0.1μF	10%	25V
	<CONNECTOR>				
CN16	* 1-785-517-11	CONNECTOR, BOARD TO BOARD 13P			
	<DIODE>				
D101	8-719-063-73	DIODE D1NL20U-TR			
D102	8-719-510-02	DIODE D1NS4			
D103	8-719-510-02	DIODE D1NS4			
D104	8-719-033-53	DIODE RD6.8SB2-T1			
D105	8-719-050-84	DIODE RB441Q-40T-77			
D107	8-719-914-43	DIODE DAN202K			
	<TRANSISTOR>				
Q101	8-729-216-22	TRANSISTOR 2SA1162-G			

Ref.No.	Part No.	Description			Remark
	<RESISTOR>				
R101	1-260-132-11	CARBON	560K	5%	1/2W
R102	1-260-131-11	CARBON	470K	5%	1/2W
R103	1-216-097-91	RES,CHIP	100K	5%	1/10W
R104	1-216-081-00	RES,CHIP	22K	5%	1/10W
R105	1-260-132-11	CARBON	560K	5%	1/2W
R106	1-260-131-11	CARBON	470K	5%	1/2W
R107	1-216-105-91	RES,CHIP	220K	5%	1/10W
R108	1-216-073-00	RES,CHIP	10K	5%	1/10W
R109	1-216-073-00	RES,CHIP	10K	5%	1/10W
R110	1-216-077-00	RES,CHIP	15K	5%	1/10W
R111	1-216-665-11	METAL CHIP	3.9K	0.50%	1/10W
R112	1-216-651-11	METAL CHIP	1K	0.50%	1/10W
R113	1-216-073-00	RES,CHIP	10K	5%	1/10W
R114	1-216-081-00	RES,CHIP	22K	5%	1/10W
R115	1-216-121-91	RES,CHIP	1M	5%	1/10W
R116	1-216-665-11	METAL CHIP	3.9K	0.50%	1/10W
R117	1-216-101-00	RES,CHIP	150K	5%	1/10W
R118	1-216-097-91	RES,CHIP	100K	5%	1/10W
R119	1-216-679-11	METAL CHIP	15K	0.50%	1/10W
R120	1-216-097-91	RES,CHIP	100K	5%	1/10W
R121	1-216-089-91	RES,CHIP	47K	5%	1/10W
R123	1-249-381-11	CARBON	1	5%	1/4W
R124	1-216-113-00	RES,CHIP	470K	5%	1/10W
R125	1-215-475-00	METAL	180K	1%	1/4W
R126	1-215-475-00	METAL	180K	1%	1/4W
R127	1-215-475-00	METAL	180K	1%	1/4W
R128	1-215-425-00	METAL	1.5K	1%	1/4W
R129	1-216-674-11	METAL CHIP	9.1K	0.50%	1/10W
	<VARIABLE RESISTOR>				
RV101	1-241-783-11	RES, ADJ, CARBON 2.2K			

****

* A-1316-411-A GB COMPLETE PC BOARD
(Include GC, CBA, GBB Mounted PC BOARD)
****

	4-034-094-01	SHEET, INSULATOR			
	* 4-067-811-01	HOLDER (G)			
	4-382-854-11	SCREW (M3X10), P, SW (+)			
	* 7-322-065-72	RUBBER, RTV (SE-9168) (130G)			
	7-685-648-79	SCREW +BVTP 3X12 TYPE2 N-S			
	<CAPACITOR>				
C1	1-164-645-11	CERAMIC	1000PF	10%	500V
C2	1-136-169-00	FILM	0.22μF	5%	50V
C3	1-115-834-11	ELECT	220μF	20%	50V
C4	1-164-645-11	CERAMIC	1000PF	10%	500V
C5	1-136-165-00	FILM	0.1μF	5%	50V
C6	1-136-169-00	FILM	0.22μF	5%	50V
C7	1-115-834-11	ELECT	220μF	20%	50V
C8	1-115-744-51	ELECT	0.0039F	20%	10V
C9	1-115-744-51	ELECT	0.0039F	20%	10V
C10	1-107-943-11	ELECT	10μF	20%	160V

GB

Ref.No.	Part No.	Description				Remark
C11	1-107-792-11	CERAMIC	100PF	5%	1KV	
C12	1-104-652-11	ELECT	470µF	20%	10V	
C13	1-115-814-11	ELECT	1000µF	20%	35V	
C14	1-128-526-11	ELECT	100µF	20%	25V	
C15	1-136-203-11	FILM	0.01µF	10%	630V	
C17	1-117-227-11	FILM	1µF	10%	450V	
C18	1-117-228-11	FILM	2.2µF	10%	450V	
C19	1-107-792-11	CERAMIC	100PF	5%	1KV	
C20	1-115-792-11	ELECT	0.0022F	20%	25V	
C21	1-115-792-11	ELECT	0.0022F	20%	25V	
C24	1-128-526-11	ELECT	100µF	20%	25V	
C25	1-107-792-11	CERAMIC	100PF	5%	1KV	
C26	1-117-644-21	FILM	10000PF	3%	1.2KV	
C27	1-115-789-11	ELECT	0.001F	20%	25V	
C29	1-115-789-11	ELECT	0.001F	20%	25V	
C31	1-128-526-11	ELECT	100µF	20%	25V	
C32	1-117-644-21	FILM	10000PF	3%	1.2KV	
C35	1-115-744-51	ELECT	0.0039F	20%	10V	
C36	1-115-744-51	ELECT	0.0039F	20%	10V	
C37	1-104-652-11	ELECT	470µF	20%	10V	
C38	1-115-741-11	ELECT	0.0022F	20%	10V	
C39	1-104-652-11	ELECT	470µF	20%	10V	
C40	1-107-792-11	CERAMIC	100PF	5%	1KV	
C41	1-115-814-11	ELECT	1000µF	20%	35V	
C42	1-117-228-11	FILM	2.2µF	10%	450V	
C43	1-124-347-00	ELECT	100µF	20%	160V	
C44	1-124-347-00	ELECT	100µF	20%	160V	
C47	1-107-910-11	ELECT	100µF	20%	35V	
C48	1-117-648-11	FILM	15000PF	3%	1.2KV	
C49	1-117-648-11	FILM	15000PF	3%	1.2KV	
C50	1-107-910-11	ELECT	100µF	20%	35V	
C51	1-117-228-11	FILM	2.2µF	10%	450V	
C52	1-107-792-11	CERAMIC	100PF	5%	1KV	
C53	1-111-152-51	ELECT	0.001F	20%	63V	
C54	1-111-152-51	ELECT	0.001F	20%	63V	
C57	1-107-932-11	ELECT	47µF	20%	63V	
C58	1-107-792-11	CERAMIC	100PF	5%	1KV	
C59	1-111-152-51	ELECT	0.001F	20%	63V	
C60	1-111-152-51	ELECT	0.001F	20%	63V	
C63	1-107-932-11	ELECT	47µF	20%	63V	
C64	1-117-648-11	FILM	15000PF	3%	1.2KV	
C65	1-117-648-11	FILM	15000PF	3%	1.2KV	
C66	1-117-228-11	FILM	2.2µF	10%	450V	
C67	1-107-792-11	CERAMIC	100PF	5%	1KV	
C69	1-107-792-11	CERAMIC	100PF	5%	1KV	
C70	1-117-648-11	FILM	15000PF	3%	1.2KV	
C71	1-117-648-11	FILM	15000PF	3%	1.2KV	
C72	1-125-611-11	ELECT(BLOCK)	1000µF	20%	250V	
C74	1-107-961-91	ELECT	10µF	20%	250V	
C76	1-128-526-11	ELECT	100µF	20%	25V	
C79	1-136-165-00	FILM	0.1µF	5%	50V	
C80	1-115-741-11	ELECT	0.0022F	20%	10V	
C100	1-102-074-00	CERAMIC	0.001µF	10%	50V	
C101	1-102-074-00	CERAMIC	0.001µF	10%	50V	
	<CONNECTOR>					
CN20	* 1-785-524-11	PIN, CONNECTOR (PC BOARD) 3P				
CN22	* 1-785-524-11	PIN, CONNECTOR (PC BOARD) 3P				

Ref.No.	Part No.	Description	Remark
CN24	* 1-564-506-11	PLUG, CONNECTOR 3P	
CN25	* 1-564-506-11	PLUG, CONNECTOR 3P	
CN26	* 1-774-249-11	CONNECTOR, BOARD TO BOARD 10P	
CN27	* 1-774-249-11	CONNECTOR, BOARD TO BOARD 10P	
CN28	* 1-774-248-11	CONNECTOR, BOARD TO BOARD 8P	
CN29	* 1-774-248-11	CONNECTOR, BOARD TO BOARD 8P	
CN30	* 1-774-248-11	CONNECTOR, BOARD TO BOARD 8P	
CN31	* 1-774-248-11	CONNECTOR, BOARD TO BOARD 8P	
CN32	* 1-774-248-11	CONNECTOR, BOARD TO BOARD 8P	
CN33	* 1-774-248-11	CONNECTOR, BOARD TO BOARD 8P	
CN34	* 1-785-515-11	PIN, CONNECTOR (PC BOARD) 8P	
CN35	* 1-785-516-11	PIN, CONNECTOR (PC BOARD) 10P	
	<DIODE>		
D1	1-807-911-11	DIODE F10P40F	
D2	8-719-050-18	DIODE D4SBL20U	
D3	8-719-510-09	DIODE D10SC6M	
D4	1-807-911-11	DIODE F10P40F	
D5	8-719-050-18	DIODE D4SBL20U	
D6	8-719-063-73	DIODE D1NL20U-TR	
D7	8-719-030-48	DIODE 1JH46-TPA3	
D8	8-719-030-48	DIODE 1JH46-TPA3	
D9	8-719-055-40	DIODE FCQ30A04	
D10	8-719-988-31	DIODE D10SC6MR	
D11	8-719-911-19	DIODE 1SS119-25	
D12	1-807-911-11	DIODE F10P40F	
D13	8-719-210-29	DIODE F10P10Q	
D14	8-719-988-31	DIODE D10SC6MR	
D15	8-719-054-38	DIODE FCF10A60	
D17	8-719-510-39	DIODE D10LC20U	
D20	8-719-063-73	DIODE D1NL20U-TR	
D23	8-719-063-73	DIODE D1NL20U-TR	
	<FERRITE BEAD>		
FB1	1-410-396-41	FERRITE 0.45µH	
FB2	1-410-396-41	FERRITE 0.45µH	
FB3	1-410-396-41	FERRITE 0.45µH	
FB4	1-410-396-41	FERRITE 0.45µH	
FB5	1-410-396-41	FERRITE 0.45µH	
	<IC>		
IC1	8-759-231-61	IC TA7820S	
IC2	8-759-231-61	IC TA7820S	
IC3	8-759-198-31	IC UPC1093J-1-T	
IC4	8-759-198-31	IC UPC1093J-1-T	
	<COIL>		
L1	1-406-703-11	INDUCTOR 3.3µH	
L2	1-412-537-31	INDUCTOR 100µH	
L3	1-406-667-11	INDUCTOR 220µH	
L4	1-406-703-11	INDUCTOR 3.3µH	
L5	1-406-703-11	INDUCTOR 3.3µH	
L6	1-406-703-11	INDUCTOR 3.3µH	
L7	1-406-703-11	INDUCTOR 3.3µH	
L8	1-406-703-11	INDUCTOR 3.3µH	
L9	1-406-979-11	INDUCTOR 220µH	

Ref.No.	Part No.	Description				Remark
L10	1-406-703-11	INDUCTOR 3.3μH				
L11	1-406-703-11	INDUCTOR 3.3μH				
L12	1-406-979-11	INDUCTOR 220μH				
L13	1-406-973-21	INDUCTOR 22μH				
L14	1-406-703-11	INDUCTOR 3.3μH				
L15	1-406-979-11	INDUCTOR 220μH				
L16	1-406-703-11	INDUCTOR 3.3μH				
L17	1-406-703-11	INDUCTOR 3.3μH				
	<PHOTO COUPLER>					
PH1	8-749-010-64	PHOTO COUPLER PC123F2				
	<TRANSISTOR>					
Q1	8-729-140-97	TRANSISTOR 2SB734-34				
Q2	8-729-140-97	TRANSISTOR 2SB734-34				
Q3	8-729-119-76	TRANSISTOR 2SA1175-HFE				
Q4	8-729-036-34	TRANSISTOR 2SK2605				
Q5	8-729-046-01	TRANSISTOR 2SK2475-CB				
Q6	8-729-046-01	TRANSISTOR 2SK2475-CB				
Q7	8-729-926-54	TRANSISTOR IRFP460				
Q8	8-729-926-54	TRANSISTOR IRFP460				
Q9	8-729-926-54	TRANSISTOR IRFP460				
Q10	8-729-926-54	TRANSISTOR IRFP460				
Q11	8-729-926-54	TRANSISTOR IRFP460				
Q12	8-729-926-54	TRANSISTOR IRFP460				
	<RESISTOR>					
R1	1-249-421-11	CARBON	2.2K	5%	1/4W	
R2	1-249-429-11	CARBON	10K	5%	1/4W	
R3	1-215-896-00	METAL OXIDE	4.7K	5%	2W	F
R4	1-215-863-11	METAL OXIDE	100	5%	1W	F
R6	1-249-421-11	CARBON	2.2K	5%	1/4W	
R7	1-249-429-11	CARBON	10K	5%	1/4W	
R9	1-249-377-11	CARBON	0.47	5%	1/4W	F
R10	1-215-475-00	METAL	180K	1%	1/4W	
R11	1-215-475-00	METAL	180K	1%	1/4W	
R12	1-215-904-11	METAL OXIDE	100K	5%	2W	F
R13	1-215-904-11	METAL OXIDE	100K	5%	2W	F
R14	⚠1-220-926-21	FUSIBLE	0.47	10%	1/2W	F
R15	1-215-904-11	METAL OXIDE	100K	5%	2W	F
R16	1-215-904-11	METAL OXIDE	100K	5%	2W	F
R17	1-215-904-11	METAL OXIDE	100K	5%	2W	F
R18	1-215-475-00	METAL	180K	1%	1/4W	
R19	1-249-429-11	CARBON	10K	5%	1/4W	
R20	1-217-152-00	METAL	0.33	10%	2W	
R21	⚠1-220-778-21	FUSIBLE	0.1	10%	1/2W	F
R22	1-249-425-11	CARBON	4.7K	5%	1/4W	
R23	1-249-425-11	CARBON	4.7K	5%	1/4W	
R24	1-216-361-00	METAL OXIDE	0.22	5%	2W	F
R25	1-216-361-00	METAL OXIDE	0.22	5%	2W	F
R26	1-219-413-11	CARBON	470K	5%	1/4W	
R27	⚠1-220-778-21	FUSIBLE	0.1	10%	1/2W	F
R28	1-249-425-11	CARBON	4.7K	5%	1/4W	
R29	1-249-425-11	CARBON	4.7K	5%	1/4W	
R30	1-216-361-00	METAL OXIDE	0.22	5%	2W	F
R31	1-216-361-00	METAL OXIDE	0.22	5%	2W	F
R32	1-249-414-11	CARBON	560	5%	1/4W	
R33	⚠1-220-778-21	FUSIBLE	0.1	10%	1/2W	F
R34	1-249-425-11	CARBON	4.7K	5%	1/4W	
R35	1-249-425-11	CARBON	4.7K	5%	1/4W	
R36	1-249-415-11	CARBON	680	5%	1/4W	
R37	1-216-361-00	METAL OXIDE	0.22	5%	2W	F
R38	1-216-361-00	METAL OXIDE	0.22	5%	2W	F
R39	⚠1-220-778-21	FUSIBLE	0.1	10%	1/2W	F
R40	1-249-425-11	CARBON	4.7K	5%	1/4W	
R41	1-249-425-11	CARBON	4.7K	5%	1/4W	
R42	1-216-361-00	METAL OXIDE	0.22	5%	2W	F
R43	1-216-361-00	METAL OXIDE	0.22	5%	2W	F
R44	1-216-361-00	METAL OXIDE	0.22	5%	2W	F
R45	1-249-415-11	CARBON	680	5%	1/4W	
R46	1-215-893-11	METAL OXIDE	1.5K	5%	2W	F
R47	1-215-893-11	METAL OXIDE	1.5K	5%	2W	F
R48	1-215-904-11	METAL OXIDE	100K	5%	2W	F
R49	1-215-409-00	METAL	330	1%	1/4W	
R50	1-215-431-00	METAL	2.7K	1%	1/4W	
R51	1-249-429-11	CARBON	10K	5%	1/4W	
R52	1-249-417-11	CARBON	1K	5%	1/4W	
R53	1-215-475-00	METAL	180K	1%	1/4W	
R54	1-215-475-00	METAL	180K	1%	1/4W	
R55	1-215-475-00	METAL	180K	1%	1/4W	
R56	1-215-409-00	METAL	330	1%	1/4W	
R57	1-215-431-00	METAL	2.7K	1%	1/4W	
R58	1-249-421-11	CARBON	2.2K	5%	1/4W	
R59	1-247-843-11	CARBON	3.3K	5%	1/4W	
	<TRANSFORMER>					
T1	1-433-522-11	TRANSFORMER, CONVERTER (PIT)				
T2	1-433-523-11	TRANSFORMER, CONVERTER (PIT)				
T3	1-433-517-11	TRANSFORMER, CONVERTER (PIT)				
T4	1-433-518-11	TRANSFORMER, CONVERTER (PIT)				
T5	1-433-519-11	TRANSFORMER, CONVERTER (PIT)				

****

* A-1311-687-A GC MOUNTED PC BOARD
****

Ref.No.	Part No.	Description				Remark
	<CAPACITOR>					
C1	1-163-021-91	CERAMIC CHIP	0.01μF	10%	50V	
C2	1-126-162-11	ELECT	3.3μF	20%	50V	
C3	1-164-004-11	CERAMIC CHIP	0.1μF	10%	25V	
C4	1-164-004-11	CERAMIC CHIP	0.1μF	10%	25V	
C5	1-126-162-11	ELECT	3.3μF	20%	50V	
C6	1-163-021-91	CERAMIC CHIP	0.01μF	10%	50V	
C7	1-164-004-11	CERAMIC CHIP	0.1μF	10%	25V	
C8	1-164-004-11	CERAMIC CHIP	0.1μF	10%	25V	
C9	1-163-021-91	CERAMIC CHIP	0.01μF	10%	50V	
C10	1-163-135-00	CERAMIC CHIP	560PF	5%	50V	
C11	1-163-021-91	CERAMIC CHIP	0.01μF	10%	50V	
C12	1-163-009-11	CERAMIC CHIP	0.001μF	10%	50V	
C13	1-136-169-00	FILM	0.22μF	5%	50V	

GC

Ref.No.	Part No.	Description			Remark
C14	1-137-194-81	FILM	0.47μF	5%	50V
C15	1-119-772-11	ELECT	47μF	20%	35V
C18	1-119-772-11	ELECT	47μF	20%	35V
C19	1-164-004-11	CERAMIC CHIP	0.1μF	10%	25V
C20	1-136-165-00	FILM	0.1μF	5%	50V
C21	1-136-153-00	FILM	0.01μF	5%	50V
C22	1-163-021-91	CERAMIC CHIP	0.01μF	10%	50V
C23	1-163-021-91	CERAMIC CHIP	0.01μF	10%	50V
C24	1-164-004-11	CERAMIC CHIP	0.1μF	10%	25V
C25	1-163-021-91	CERAMIC CHIP	0.01μF	10%	50V
C100	1-163-021-91	CERAMIC CHIP	0.01μF	10%	50V
	<CONNECTOR>				
CN42	* 1-774-246-11	CONNECTOR, BOARD TO BOARD 10P			
CN43	* 1-774-246-11	CONNECTOR, BOARD TO BOARD 10P			
	<DIODE>				
D1	8-719-109-85	DIODE RD5.1ESB2			
D2	8-719-914-43	DIODE DAN202K			
D3	8-719-914-43	DIODE DAN202K			
D4	8-719-914-43	DIODE DAN202K			
D5	8-719-914-43	DIODE DAN202K			
D9	8-719-063-73	DIODE D1NL20U-TR			
D12	8-719-110-53	DIODE RD20ESB2			
	<IC>				
IC1	8-759-198-31	IC UPC1093J-1-T			
IC2	8-759-198-31	IC UPC1093J-1-T			
IC3	8-759-916-16	IC SN74HC08AN			
IC4	8-759-912-77	IC LM324N			
IC5	8-759-637-30	IC M51978P			
IC6	8-759-135-80	IC UPC358C			
	<PHOTO COUPLER>				
PH1	8-749-010-64	PHOTO COUPLER PC123F2			
PH3	8-749-010-64	PHOTO COUPLER PC123F2			
PH4	8-749-010-64	PHOTO COUPLER PC123F2			
PH5	8-749-010-64	PHOTO COUPLER PC123F2			
	<TRANSISTOR>				
Q1	8-729-230-49	TRANSISTOR 2SC2712-YG			
Q2	8-729-216-22	TRANSISTOR 2SA1162-G			
Q3	8-729-230-49	TRANSISTOR 2SC2712-YG			
Q4	8-729-230-49	TRANSISTOR 2SC2712-YG			
	<RESISTOR>				
R2	1-216-073-00	RES,CHIP	10K	5%	1/10W
R3	1-216-049-91	RES,CHIP	1K	5%	1/10W
R4	1-216-073-00	RES,CHIP	10K	5%	1/10W
R5	1-216-073-00	RES,CHIP	10K	5%	1/10W
R7	1-216-049-91	RES,CHIP	1K	5%	1/10W
R8	1-216-073-00	RES,CHIP	10K	5%	1/10W
R9	1-216-073-00	RES,CHIP	10K	5%	1/10W

Ref.No.	Part No.	Description			Remark
R10	1-216-073-00	RES,CHIP	10K	5%	1/10W
R11	1-247-807-31	CARBON	100	5%	1/4W
R12	1-216-073-00	RES,CHIP	10K	5%	1/10W
R13	1-216-073-00	RES,CHIP	10K	5%	1/10W
R14	1-216-049-91	RES,CHIP	1K	5%	1/10W
R15	1-216-077-00	RES,CHIP	15K	5%	1/10W
R17	1-216-073-00	RES,CHIP	10K	5%	1/10W
R18	1-216-073-00	RES,CHIP	10K	5%	1/10W
R19	1-216-085-00	RES,CHIP	33K	5%	1/10W
R20	1-216-049-91	RES,CHIP	1K	5%	1/10W
R21	1-216-049-91	RES,CHIP	1K	5%	1/10W
R22	1-216-675-11	METAL CHIP	10K	0.50%	1/10W
R23	1-216-675-11	METAL CHIP	10K	0.50%	1/10W
R24	1-216-049-91	RES,CHIP	1K	5%	1/10W
R25	1-216-049-91	RES,CHIP	1K	5%	1/10W
R26	1-215-478-00	METAL	240K	1%	1/4W
R27	1-215-479-00	METAL	270K	1%	1/4W
R28	1-215-484-00	METAL	430K	1%	1/4W
R29	1-215-484-00	METAL	430K	1%	1/4W
R30	1-216-049-91	RES,CHIP	1K	5%	1/10W
R31	1-216-089-91	RES,CHIP	47K	5%	1/10W
R32	1-216-105-91	RES,CHIP	220K	5%	1/10W
R33	1-216-073-00	RES,CHIP	10K	5%	1/10W
R34	1-216-609-11	RES,CHIP	18	5%	1/10W
R35	1-216-097-91	RES,CHIP	100K	5%	1/10W
R36	1-216-005-00	RES,CHIP	15	5%	1/10W
R37	1-216-081-00	RES,CHIP	22K	5%	1/10W
R38	1-216-079-00	RES,CHIP	18K	5%	1/10W
R39	1-216-049-91	RES,CHIP	1K	5%	1/10W
R41	1-216-049-91	RES,CHIP	1K	5%	1/10W
R43	1-216-049-91	RES,CHIP	1K	5%	1/10W
R44	1-216-049-91	RES,CHIP	1K	5%	1/10W
R45	1-216-049-91	RES,CHIP	1K	5%	1/10W
R46	1-216-049-91	RES,CHIP	1K	5%	1/10W
R47	1-216-661-11	METAL CHIP	2.7K	0.50%	1/10W
R48	1-216-656-11	METAL CHIP	1.6K	0.50%	1/10W
R49	1-216-049-91	RES,CHIP	1K	5%	1/10W
R50	1-216-113-00	RES,CHIP	470K	5%	1/10W
R51	1-216-049-91	RES,CHIP	1K	5%	1/10W
R52	1-216-659-11	METAL CHIP	2.2K	0.50%	1/10W
R53	1-216-049-91	RES,CHIP	1K	5%	1/10W
R54	1-216-654-11	METAL CHIP	1.3K	0.50%	1/10W
R55	1-249-405-11	CARBON	100	5%	1/4W F
R56	1-249-393-11	CARBON	10	5%	1/4W F
R57	1-249-405-11	CARBON	100	5%	1/4W F
R58	1-249-405-11	CARBON	100	5%	1/4W F
R59	1-249-405-11	CARBON	100	5%	1/4W F
R61	1-216-067-00	RES,CHIP	5.6K	5%	1/10W
R62	1-216-675-11	METAL CHIP	10K	0.50%	1/10W
R63	1-216-049-91	RES,CHIP	1K	5%	1/10W
R64	1-216-049-91	RES,CHIP	1K	5%	1/10W
R65	1-215-469-00	METAL	100K	1%	1/4W
R66	1-215-471-00	METAL	120K	1%	1/4W
R67	1-216-085-00	RES,CHIP	33K	5%	1/10W
R68	1-249-381-11	CARBON	1	5%	1/4W F
R69	1-216-049-91	RES,CHIP	1K	5%	1/10W
R70	1-216-073-00	RES,CHIP	10K	5%	1/10W
R100	1-216-073-00	RES,CHIP	10K	5%	1/10W

Ref.No.	Part No.	Description				Remark
	<VARIABLE RESISTOR>					
RV1	1-238-543-11	RES, ADJ, CARBON 470				

****

* A-1311-706-A GBA MOUNTED PC BOARD
****

Ref.No.	Part No.	Description				Remark
	<CAPACITOR>					
C201	1-163-133-00	CERAMIC CHIP	470PF	5%	50V	
C202	1-163-133-00	CERAMIC CHIP	470PF	5%	50V	
C203	1-136-165-00	FILM	0.1μF	5%	50V	
C204	1-136-165-00	FILM	0.1μF	5%	50V	
C205	1-137-194-81	FILM	0.47μF	5%	50V	
C206	1-137-194-81	FILM	0.47μF	5%	50V	
C207	1-163-021-91	CERAMIC CHIP	0.01μF	10%	50V	
C208	1-163-021-91	CERAMIC CHIP	0.01μF	10%	50V	
C209	1-163-133-00	CERAMIC CHIP	470PF	5%	50V	
C210	1-163-133-00	CERAMIC CHIP	470PF	5%	50V	
C211	1-163-133-00	CERAMIC CHIP	470PF	5%	50V	
C212	1-163-133-00	CERAMIC CHIP	470PF	5%	50V	
C213	1-163-133-00	CERAMIC CHIP	470PF	5%	50V	
C214	1-163-133-00	CERAMIC CHIP	470PF	5%	50V	
C215	1-163-263-11	CERAMIC CHIP	330PF	5%	50V	
C216	1-163-263-11	CERAMIC CHIP	330PF	5%	50V	
C217	1-136-165-00	FILM	0.1μF	5%	50V	
C218	1-136-165-00	FILM	0.1μF	5%	50V	
C219	1-164-161-11	CERAMIC CHIP	0.0022μF	10%	50V	
C220	1-164-161-11	CERAMIC CHIP	0.0022μF	10%	50V	
C221	1-164-161-11	CERAMIC CHIP	0.0022μF	10%	50V	
C222	1-164-161-11	CERAMIC CHIP	0.0022μF	10%	50V	
C223	1-164-004-11	CERAMIC CHIP	0.1μF	10%	25V	
C224	1-164-004-11	CERAMIC CHIP	0.1μF	10%	25V	
C225	1-137-194-81	FILM	0.47μF	5%	50V	
C226	1-137-194-81	FILM	0.47μF	5%	50V	
C227	1-126-951-11	ELECT	470μF	20%	35V	
C228	1-126-951-11	ELECT	470μF	20%	35V	
C229	1-163-017-00	CERAMIC CHIP	0.0047μF	10%	50V	
C230	1-163-017-00	CERAMIC CHIP	0.0047μF	10%	50V	
C231	1-163-021-91	CERAMIC CHIP	0.01μF	10%	50V	
C232	1-119-772-91	ELECT MELF	47μF	20%	35V	
C233	1-137-368-11	FILM	0.0047μF	5%	50V	
C234	1-136-153-00	FILM	0.01μF	5%	50V	
	<CONNECTOR>					
CN36	* 1-774-245-11	CONNECTOR, BOARD TO BOARD 8P				
CN37	* 1-774-245-11	CONNECTOR, BOARD TO BOARD 8P				
CN38	* 1-774-245-11	CONNECTOR, BOARD TO BOARD 8P				
	<DIODE>					
D201	8-719-050-84	DIODE RB441Q-40T-77				
D202	8-719-050-84	DIODE RB441Q-40T-77				
D203	8-719-050-84	DIODE RB441Q-40T-77				
D204	8-719-050-84	DIODE RB441Q-40T-77				
D205	8-719-210-21	DIODE 11EQS04				
D206	8-719-210-21	DIODE 11EQS04				
D207	8-719-210-21	DIODE 11EQS04				
D208	8-719-210-21	DIODE 11EQS04				
D209	8-719-914-43	DIODE DAN202K				
D210	8-719-914-43	DIODE DAN202K				
D211	8-719-110-31	DIODE RD12ESB2				
D212	8-719-110-31	DIODE RD12ESB2				
D213	8-719-063-73	DIODE D1NL20U-TR				
D214	8-719-063-73	DIODE D1NL20U-TR				
D215	8-719-063-73	DIODE D1NL20U-TR				
D216	8-719-063-73	DIODE D1NL20U-TR				
	<IC>					
IC201	8-759-298-87	IC CXA8038P				
IC202	8-759-298-87	IC CXA8038P				
IC203	8-759-135-80	IC UPC358C				
IC204	8-759-198-31	IC UPC1093J-1-T				
	<PHOTO COUPLER>					
PH201	8-749-010-64	PHOTO COUPLER PC123F2				
PH202	8-749-010-64	PHOTO COUPLER PC123F2				
	<TRANSISTOR>					
Q201	8-729-205-02	TRANSISTOR 2SA1150-Y				
Q202	8-729-205-02	TRANSISTOR 2SA1150-Y				
Q203	8-729-205-02	TRANSISTOR 2SA1150-Y				
Q204	8-729-205-02	TRANSISTOR 2SA1150-Y				
Q205	8-729-140-96	TRANSISTOR 2SD774-34				
Q206	8-729-140-96	TRANSISTOR 2SD774-34				
	<RESISTOR>					
R201	1-247-791-91	CARBON	22	5%	1/4W	
R202	1-247-791-91	CARBON	22	5%	1/4W	
R203	1-216-061-00	RES,CHIP	3.3K	5%	1/10W	
R204	1-216-061-00	RES,CHIP	3.3K	5%	1/10W	
R205	1-216-033-00	RES,CHIP	220	5%	1/10W	
R206	1-216-033-00	RES,CHIP	220	5%	1/10W	
R207	1-216-097-91	RES,CHIP	100K	5%	1/10W	
R208	1-216-097-91	RES,CHIP	100K	5%	1/10W	
R209	1-216-057-00	RES,CHIP	2.2K	5%	1/10W	
R210	1-216-057-00	RES,CHIP	2.2K	5%	1/10W	
R211	1-216-057-00	RES,CHIP	2.2K	5%	1/10W	
R212	1-216-057-00	RES,CHIP	2.2K	5%	1/10W	
R213	1-216-065-91	RES,CHIP	4.7K	5%	1/10W	
R214	1-216-065-91	RES,CHIP	4.7K	5%	1/10W	
R215	1-216-065-91	RES,CHIP	4.7K	5%	1/10W	
R216	1-216-065-91	RES,CHIP	4.7K	5%	1/10W	
R217	1-216-065-91	RES,CHIP	4.7K	5%	1/10W	
R218	1-216-065-91	RES,CHIP	4.7K	5%	1/10W	
R219	1-216-065-91	RES,CHIP	4.7K	5%	1/10W	
R220	1-216-065-91	RES,CHIP	4.7K	5%	1/10W	
R221	1-249-389-11	CARBON	4.7	5%	1/4W	F
R222	1-216-049-91	RES,CHIP	1K	5%	1/10W	
R223	1-249-389-11	CARBON	4.7	5%	1/4W	F
R224	1-216-049-91	RES,CHIP	1K	5%	1/10W	

GBA GBB

Ref.No.	Part No.	Description			Remark
R227	1-249-389-11	CARBON	4.7	5%	1/4W F
R228	1-249-389-11	CARBON	4.7	5%	1/4W F
R229	1-216-079-00	RES,CHIP	18K	5%	1/10W
R230	1-216-065-91	RES,CHIP	4.7K	5%	1/10W
R231	1-216-077-00	RES,CHIP	15K	5%	1/10W
R232	1-216-065-91	RES,CHIP	4.7K	5%	1/10W
R233	1-216-057-00	RES,CHIP	2.2K	5%	1/10W
R234	1-216-057-00	RES,CHIP	2.2K	5%	1/10W
R237	1-216-057-00	RES,CHIP	2.2K	5%	1/10W
R238	1-216-057-00	RES,CHIP	2.2K	5%	1/10W
R239	1-216-113-00	RES,CHIP	470K	5%	1/10W
R240	1-216-081-00	RES,CHIP	22K	5%	1/10W
R241	1-216-057-00	RES,CHIP	2.2K	5%	1/10W
R242	1-216-089-91	RES,CHIP	47K	5%	1/10W
R243	1-216-671-11	METAL CHIP	6.8K	0.50%	1/10W
R245	1-215-459-00	METAL	39K	1%	1/4W
R247	1-216-049-91	RES,CHIP	1K	5%	1/10W
R248	1-216-657-11	METAL CHIP	1.8K	0.50%	1/10W
R249	1-216-049-91	RES,CHIP	1K	5%	1/10W
R250	1-216-073-00	RES,CHIP	10K	5%	1/10W
R251	1-216-651-11	METAL CHIP	1K	0.50%	1/10W

<VARIABLE RESISTOR>

RV201	1-241-784-11	RES, ADJ, CARBON 4.7K
RV202	1-241-784-11	RES, ADJ, CARBON 4.7K
RV203	1-238-543-11	RES, ADJ, CARBON 470
RV204	1-238-543-11	RES, ADJ, CARBON 470

<TRANSFORMER>

T201	1-429-741-11	TRANSFORMER, DRIVE
T202	1-429-741-11	TRANSFORMER, DRIVE

****

* A-1311-707-A GBB MOUNTED PC BOARD
****

<CAPACITOR>

Ref.No.	Part No.	Description			Remark
C401	1-163-133-00	CERAMIC CHIP	470PF	5%	50V
C402	1-163-133-00	CERAMIC CHIP	470PF	5%	50V
C403	1-136-165-00	FILM	0.1μF	5%	50V
C404	1-136-165-00	FILM	0.1μF	5%	50V
C405	1-137-194-81	FILM	0.47μF	5%	50V
C406	1-137-194-81	FILM	0.47μF	5%	50V
C407	1-163-021-91	CERAMIC CHIP	0.01μF	10%	50V
C408	1-163-021-91	CERAMIC CHIP	0.01μF	10%	50V
C409	1-163-133-00	CERAMIC CHIP	470PF	5%	50V
C410	1-163-133-00	CERAMIC CHIP	470PF	5%	50V
C411	1-163-133-00	CERAMIC CHIP	470PF	5%	50V
C412	1-163-133-00	CERAMIC CHIP	470PF	5%	50V
C413	1-163-133-00	CERAMIC CHIP	470PF	5%	50V
C414	1-163-133-00	CERAMIC CHIP	470PF	5%	50V
C415	1-163-263-11	CERAMIC CHIP	330PF	5%	50V
C416	1-163-263-11	CERAMIC CHIP	330PF	5%	50V
C417	1-136-171-00	FILM	0.33μF	5%	50V
C418	1-136-165-00	FILM	0.1μF	5%	50V
C419	1-164-161-11	CERAMIC CHIP	0.0022μF	10%	50V
C420	1-164-161-11	CERAMIC CHIP	0.0022μF	10%	50V
C421	1-164-161-11	CERAMIC CHIP	0.0022μF	10%	50V
C422	1-164-161-11	CERAMIC CHIP	0.0022μF	10%	50V
C423	1-164-004-11	CERAMIC CHIP	0.1μF	10%	25V
C424	1-164-004-11	CERAMIC CHIP	0.1μF	10%	25V
C425	1-137-194-81	FILM	0.47μF	5%	50V
C426	1-137-194-81	FILM	0.47μF	5%	50V
C427	1-126-951-11	ELECT	470μF	20%	35V
C428	1-126-951-11	ELECT	470μF	20%	35V
C429	1-163-017-00	CERAMIC CHIP	0.0047μF	10%	50V
C430	1-163-017-00	CERAMIC CHIP	0.0047μF	10%	50V
C431	1-164-004-11	CERAMIC CHIP	0.1μF	10%	25V
C432	1-119-772-91	ELECT MELF	47μF	20%	35V
C433	1-136-356-11	FILM	470PF	5%	50V
C434	1-136-356-11	FILM	470PF	5%	50V

<CONNECTOR>

CN39	* 1-774-245-11	CONNECTOR, BOARD TO BOARD 8P
CN40	* 1-774-245-11	CONNECTOR, BOARD TO BOARD 8P
CN41	* 1-774-245-11	CONNECTOR, BOARD TO BOARD 8P

<DIODE>

D401	8-719-050-84	DIODE RB441Q-40T-77
D402	8-719-050-84	DIODE RB441Q-40T-77
D403	8-719-050-84	DIODE RB441Q-40T-77
D404	8-719-050-84	DIODE RB441Q-40T-77
D405	8-719-210-21	DIODE 11EQS04
D406	8-719-210-21	DIODE 11EQS04
D407	8-719-210-21	DIODE 11EQS04
D408	8-719-210-21	DIODE 11EQS04
D409	8-719-914-43	DIODE DAN202K
D410	8-719-914-43	DIODE DAN202K
D411	8-719-110-31	DIODE RD12ESB2
D412	8-719-110-31	DIODE RD12ESB2
D413	8-719-063-73	DIODE D1NL20U-TR
D414	8-719-063-73	DIODE D1NL20U-TR

<IC>

IC401	8-759-298-87	IC CXA8038P
IC402	8-759-298-87	IC CXA8038P
IC403	8-759-135-80	IC UPC358C
IC404	8-759-198-31	IC UPC1093J-1-T

<PHOTO COUPLER>

PH401	8-749-010-64	PHOTO COUPLER PC123F2
PH402	8-749-010-64	PHOTO COUPLER PC123F2

<TRANSISTOR>

Q401	8-729-205-02	TRANSISTOR 2SA1150-Y
Q402	8-729-205-02	TRANSISTOR 2SA1150-Y
Q403	8-729-205-02	TRANSISTOR 2SA1150-Y
Q404	8-729-205-02	TRANSISTOR 2SA1150-Y
Q405	8-729-140-96	TRANSISTOR 2SD774-34

Ref.No.	Part No.	Description				Remark
Q406	8-729-140-96	TRANSISTOR 2SD774-34				
	<RESISTOR>					
R401	1-247-791-91	CARBON	22	5%	1/4W	
R402	1-247-791-91	CARBON	22	5%	1/4W	
R403	1-216-061-00	RES,CHIP	3.3K	5%	1/10W	
R404	1-216-061-00	RES,CHIP	3.3K	5%	1/10W	
R405	1-216-033-00	RES,CHIP	220	5%	1/10W	
R406	1-216-033-00	RES,CHIP	220	5%	1/10W	
R407	1-216-097-91	RES,CHIP	100K	5%	1/10W	
R408	1-216-097-91	RES,CHIP	100K	5%	1/10W	
R409	1-216-057-00	RES,CHIP	2.2K	5%	1/10W	
R410	1-216-057-00	RES,CHIP	2.2K	5%	1/10W	
R411	1-216-057-00	RES,CHIP	2.2K	5%	1/10W	
R412	1-216-057-00	RES,CHIP	2.2K	5%	1/10W	
R413	1-216-065-91	RES,CHIP	4.7K	5%	1/10W	
R414	1-216-065-91	RES,CHIP	4.7K	5%	1/10W	
R415	1-216-065-91	RES,CHIP	4.7K	5%	1/10W	
R416	1-216-065-91	RES,CHIP	4.7K	5%	1/10W	
R417	1-216-065-91	RES,CHIP	4.7K	5%	1/10W	
R418	1-216-065-91	RES,CHIP	4.7K	5%	1/10W	
R419	1-216-065-91	RES,CHIP	4.7K	5%	1/10W	
R420	1-216-065-91	RES,CHIP	4.7K	5%	1/10W	
R421	1-249-389-11	CARBON	4.7	5%	1/4W	F
R422	1-216-049-91	RES,CHIP	1K	5%	1/10W	
R423	1-249-389-11	CARBON	4.7	5%	1/4W	F
R424	1-216-049-91	RES,CHIP	1K	5%	1/10W	
R427	1-249-389-11	CARBON	4.7	5%	1/4W	F
R428	1-249-389-11	CARBON	4.7	5%	1/4W	F
R429	1-216-077-00	RES,CHIP	15K	5%	1/10W	
R430	1-216-057-00	RES,CHIP	2.2K	5%	1/10W	
R431	1-216-079-00	RES,CHIP	18K	5%	1/10W	
R432	1-216-065-91	RES,CHIP	4.7K	5%	1/10W	
R433	1-216-057-00	RES,CHIP	2.2K	5%	1/10W	
R434	1-216-057-00	RES,CHIP	2.2K	5%	1/10W	
R437	1-216-057-00	RES,CHIP	2.2K	5%	1/10W	
R438	1-216-057-00	RES,CHIP	2.2K	5%	1/10W	
R439	1-216-105-91	RES,CHIP	220K	5%	1/10W	
R440	1-216-105-91	RES,CHIP	220K	5%	1/10W	
R441	1-216-105-91	RES,CHIP	220K	5%	1/10W	
R442	1-216-113-00	RES,CHIP	470K	5%	1/10W	
R443	1-215-484-00	METAL	430K	1%	1/4W	
R444	1-249-405-11	CARBON	100	5%	1/4W	F
R445	1-215-471-00	METAL	120K	1%	1/4W	
R446	1-215-471-00	METAL	120K	1%	1/4W	
R447	1-216-049-91	RES,CHIP	1K	5%	1/10W	
R448	1-216-667-11	METAL CHIP	4.7K	0.50%	1/10W	
R449	1-216-049-91	RES,CHIP	1K	5%	1/10W	
R450	1-216-073-00	RES,CHIP	10K	5%	1/10W	
R451	1-216-675-11	METAL CHIP	10K	0.50%	1/10W	
R452	1-215-485-00	METAL	470K	1%	1/4W	
R453	1-249-405-11	CARBON	100	5%	1/4W	F
	<VARIABLE RESISTOR>					
RV401	1-241-784-11	RES, ADJ, CARBON 4.7K				
RV402	1-241-784-11	RES, ADJ, CARBON 4.7K				
RV403	1-241-761-11	RES, ADJ, CARBON 1K				
RV404	1-241-783-11	RES, ADJ, CARBON 2.2K				
	<TRANSFORMER>					
T401	1-429-741-11	TRANSFORMER, DRIVE				
T402	1-429-741-11	TRANSFORMER, DRIVE				

****

* A-1331-858-A CBR MOUNTED PC BOARD
****

Ref.No.	Part No.	Description				Remark
	<CAPACITOR>					
C2001	1-162-114-00	CERAMIC	0.0047μF		2KV	
C2002	1-162-117-00	CERAMIC	100PF	10%	500V	
C2003	1-162-114-00	CERAMIC	0.0047μF		2KV	
C2004	1-162-114-00	CERAMIC	0.0047μF		2KV	
C2005	1-162-114-00	CERAMIC	0.0047μF		2KV	
C2008	1-162-117-00	CERAMIC	100PF	10%	500V	
	<CONNECTOR>					
CN300	* 1-564-507-11	PLUG, CONNECTOR 4P				
CN301	* 1-564-507-11	PLUG, CONNECTOR 4P				
CN302	* 1-564-506-11	PLUG, CONNECTOR 3P				
CN303	* 1-508-784-00	PIN, CONNECTOR (5MM PITCH) 1P				
CN304	1-764-101-11	PIN, CONNECTOR (PC BOARD) 2P				
	<FERRITE BEAD>					
FB2001	1-410-397-21	FERRITE 1.1μH				
FB2011	1-410-397-21	FERRITE 1.1μH				
FB2012	1-410-397-21	FERRITE 1.1μH				
	<JACK>					
J2001	1-451-482-11	SOCKET, CRT				
	<COIL>					
L2002	1-414-137-31	INDUCTOR 0.22μH				
L2004	1-414-137-31	INDUCTOR 0.22μH				
	<RESISTOR>					
R2002	1-219-743-11	CARBON	100	5%	1/2W	
R2003	1-219-742-11	CARBON	47	5%	1/2W	
R2005	1-219-752-11	CARBON	100K	5%	1/2W	
R2006	1-219-513-11	CARBON	4.7M	5%	1/2W	
R2008	1-219-743-11	CARBON	100	5%	1/2W	
R2009	1-219-755-11	CARBON	10M	5%	1/2W	
	<SPARK GAP>					
SG2001	1-519-504-11	GAP, DISCHARGE				
SG2002	1-519-422-11	GAP, SPARK				
SG2003	1-519-504-11	GAP, DISCHARGE				

Ref.No.	Part No.	Description			Remark
SG2009	1-517-422-11	GAP, SPARK			

****

* A-1331-859-A CBG MOUNTED PC BOARD
****

<CAPACITOR>

C2001	1-162-114-00	CERAMIC	0.0047μF		2KV
C2002	1-162-117-00	CERAMIC	100PF	10%	500V
C2003	1-162-114-00	CERAMIC	0.0047μF		2KV
C2004	1-162-114-00	CERAMIC	0.0047μF		2KV
C2005	1-162-114-00	CERAMIC	0.0047μF		2KV
C2008	1-162-117-00	CERAMIC	100PF	10%	500V

<CONNECTOR>

CN310	* 1-564-507-11	PLUG, CONNECTOR 4P	
CN311	* 1-564-507-11	PLUG, CONNECTOR 4P	
CN312	* 1-564-506-11	PLUG, CONNECTOR 3P	
CN313	* 1-508-784-00	PIN, CONNECTOR (5MM PITCH) 1P	
CN314	1-764-101-11	PIN, CONNECTOR (PC BOARD) 2P	

<FERRITE BEAD>

FB2001	1-410-397-21	FERRITE 1.1μH
FB2011	1-410-397-21	FERRITE 1.1μH
FB2012	1-410-397-21	FERRITE 1.1μH

<JACK>

J2001	1-451-482-11	SOCKET, CRT

<COIL>

L2002	1-414-137-31	INDUCTOR 0.22μH
L2004	1-414-137-31	INDUCTOR 0.22μH

<RESISTOR>

R2002	1-219-743-11	CARBON	100	5%	1/2W
R2003	1-219-742-11	CARBON	47	5%	1/2W
R2005	1-219-752-11	CARBON	100K	5%	1/2W
R2006	1-219-513-11	CARBON	4.7M	5%	1/2W
R2008	1-219-743-11	CARBON	100	5%	1/2W
R2009	1-219-755-11	CARBON	10M	5%	1/2W

<SPARK GAP>

SG2001	1-519-504-11	GAP, DISCHARGE
SG2002	1-519-422-11	GAP, SPARK
SG2003	1-519-504-11	GAP, DISCHARGE
SG2009	1-517-422-11	GAP, SPARK

****

* A-1331-860-A CBB MOUNTED PC BOARD
****

<CAPACITOR>

C2001	1-162-114-00	CERAMIC	0.0047μF		2KV
C2002	1-162-117-00	CERAMIC	100PF	10%	500V
C2003	1-162-114-00	CERAMIC	0.0047μF		2KV
C2004	1-162-114-00	CERAMIC	0.0047μF		2KV
C2005	1-162-114-00	CERAMIC	0.0047μF		2KV
C2008	1-162-117-00	CERAMIC	100PF	10%	500V

<CONNECTOR>

CN320	* 1-564-507-11	PLUG, CONNECTOR 4P
CN321	* 1-564-507-11	PLUG, CONNECTOR 4P
CN322	* 1-564-506-11	PLUG, CONNECTOR 3P
CN323	* 1-508-784-00	PIN, CONNECTOR (5MM PITCH) 1P
CN324	1-764-101-11	PIN, CONNECTOR (PC BOARD) 2P

<FERRITE BEAD>

FB2001	1-410-397-21	FERRITE 1.1μH
FB2011	1-410-397-21	FERRITE 1.1μH
FB2012	1-410-397-21	FERRITE 1.1μH

<JACK>

J2001	1-451-482-11	SOCKET, CRT

<COIL>

L2002	1-414-137-31	INDUCTOR 0.22μH
L2004	1-414-137-31	INDUCTOR 0.22μH

<RESISTOR>

R2002	1-219-743-11	CARBON	100	5%	1/2W
R2003	1-219-742-11	CARBON	47	5%	1/2W
R2005	1-219-752-11	CARBON	100K	5%	1/2W
R2006	1-219-513-11	CARBON	4.7M	5%	1/2W
R2008	1-219-743-11	CARBON	100	5%	1/2W
R2009	1-219-755-11	CARBON	10M	5%	1/2W

<SPARK GAP>

SG2001	1-519-504-11	GAP, DISCHARGE
SG2002	1-519-422-11	GAP, SPARK
SG2003	1-519-504-11	GAP, DISCHARGE
SG2009	1-517-422-11	GAP, SPARK

Ref.No.	Part No.	Description	Remark
**********			
	* A-1335-105-A	CR COMPLETE PC BOARD (Include CAR, CDR Mounted PC BOARD) **********	
	3-701-809-31	SCREW, TERMINAL (M3X8)	
	4-057-640-01	COVER, VOLUME	
	* 4-067-812-01	HOLDER (C), TR	
	* 4-067-820-01	HOLDER (VP)	
	* 7-322-065-72	RUBBER, RTV (SE-9168) (130G)	
	7-682-652-09	SCREW +PS 3X16	
	7-682-949-01	SCREW +PSW 3X10	
**********			
		CAR MOUNTED PC BOARD **********	
	<CAPACITOR>		
C11	1-110-648-11	ELECT CHIP 220μF 20%	25V
C12	1-128-304-11	ELECT CHIP 330μF 20%	16V
C15	1-128-361-11	ELECT CHIP 470μF 20%	10V
C16	1-128-361-11	ELECT CHIP 470μF 20%	10V
C21	1-110-648-11	ELECT CHIP 220μF 20%	25V
C22	1-128-304-11	ELECT CHIP 330μF 20%	16V
C24	1-128-361-11	ELECT CHIP 470μF 20%	10V
C51	1-164-004-11	CERAMIC CHIP 0.1μF 10%	25V
C61	1-164-004-11	CERAMIC CHIP 0.1μF 10%	25V
C71	1-164-004-11	CERAMIC CHIP 0.1μF 10%	25V
C81	1-164-004-11	CERAMIC CHIP 0.1μF 10%	25V
C105	1-164-004-11	CERAMIC CHIP 0.1μF 10%	25V
C106	1-104-913-11	TANTAL. CHIP 10μF 10%	16V
C107	1-164-004-11	CERAMIC CHIP 0.1μF 10%	25V
C108	1-104-913-11	TANTAL. CHIP 10μF 10%	16V
C111	1-126-392-11	ELECT CHIP 100μF 20%	6.3V
C132	1-164-004-11	CERAMIC CHIP 0.1μF 10%	25V
C135	1-164-004-11	CERAMIC CHIP 0.1μF 10%	25V
C136	1-126-394-11	ELECT CHIP 10μF 20%	16V
C141	1-163-021-91	CERAMIC CHIP 0.01μF 10%	50V
C142	1-163-009-11	CERAMIC CHIP 0.001μF 10%	50V
C146	1-164-004-11	CERAMIC CHIP 0.1μF 10%	25V
C151	1-163-017-00	CERAMIC CHIP 0.0047μF 10%	50V
C152	1-163-017-00	CERAMIC CHIP 0.0047μF 10%	50V
C153	1-164-004-11	CERAMIC CHIP 0.1μF 10%	25V
C154	1-164-004-11	CERAMIC CHIP 0.1μF 10%	25V
C171	1-164-004-11	CERAMIC CHIP 0.1μF 10%	25V
C172	1-135-177-21	TANTAL. CHIP 1μF 20%	16V
C173	1-164-004-11	CERAMIC CHIP 0.1μF 10%	25V
C174	1-135-177-21	TANTAL. CHIP 1μF 20%	16V
C441	1-163-001-11	CERAMIC CHIP 220PF 10%	50V
C444	1-135-177-21	TANTAL. CHIP 1μF 20%	16V
C445	1-164-004-11	CERAMIC CHIP 0.1μF 10%	25V
C446	1-163-001-11	CERAMIC CHIP 220PF 10%	50V
C451	1-163-001-11	CERAMIC CHIP 220PF 10%	50V
C454	1-135-177-21	TANTAL. CHIP 1μF 20%	16V
C455	1-164-004-11	CERAMIC CHIP 0.1μF 10%	25V
C456	1-163-001-11	CERAMIC CHIP 220PF 10%	50V
C502	1-104-607-11	ELECT CHIP 47μF 20%	16V
C503	1-164-004-11	CERAMIC CHIP 0.1μF 10%	25V
C505	1-164-004-11	CERAMIC CHIP 0.1μF 10%	25V
C506	1-164-004-11	CERAMIC CHIP 0.1μF 10%	25V
C511	1-104-913-11	TANTAL. CHIP 10μF 10%	16V
C512	1-164-004-11	CERAMIC CHIP 0.1μF 10%	25V
C513	1-164-004-11	CERAMIC CHIP 0.1μF 10%	25V
C514	1-164-004-11	CERAMIC CHIP 0.1μF 10%	25V
C515	1-104-913-11	TANTAL. CHIP 10μF 10%	16V
C516	1-104-913-11	TANTAL. CHIP 10μF 10%	16V
C525	1-126-394-11	ELECT CHIP 10μF 20%	16V
C526	1-164-004-11	CERAMIC CHIP 0.1μF 10%	25V
C527	1-164-004-11	CERAMIC CHIP 0.1μF 10%	25V
C540	1-164-004-11	CERAMIC CHIP 0.1μF 10%	25V
C551	1-164-004-11	CERAMIC CHIP 0.1μF 10%	25V
C552	1-164-004-11	CERAMIC CHIP 0.1μF 10%	25V
C560	1-164-004-11	CERAMIC CHIP 0.1μF 10%	25V
C561	1-164-004-11	CERAMIC CHIP 0.1μF 10%	25V
C562	1-164-004-11	CERAMIC CHIP 0.1μF 10%	25V
C571	1-164-004-11	CERAMIC CHIP 0.1μF 10%	25V
C572	1-164-004-11	CERAMIC CHIP 0.1μF 10%	25V
C573	1-164-004-11	CERAMIC CHIP 0.1μF 10%	25V
C591	1-164-004-11	CERAMIC CHIP 0.1μF 10%	25V
C592	1-104-913-11	TANTAL. CHIP 10μF 10%	16V
C593	1-164-004-11	CERAMIC CHIP 0.1μF 10%	25V
C594	1-104-913-11	TANTAL. CHIP 10μF 10%	16V
C606	1-164-004-11	CERAMIC CHIP 0.1μF 10%	25V
C610	1-104-607-11	ELECT CHIP 47μF 20%	16V
C611	1-164-004-11	CERAMIC CHIP 0.1μF 10%	25V
C612	1-164-004-11	CERAMIC CHIP 0.1μF 10%	25V
C617	1-164-004-11	CERAMIC CHIP 0.1μF 10%	25V
C621	1-104-913-11	TANTAL. CHIP 10μF 10%	16V
C622	1-164-004-11	CERAMIC CHIP 0.1μF 10%	25V
C631	1-126-767-11	ELECT 1000μF 20%	16V
C632	1-164-004-11	CERAMIC CHIP 0.1μF 10%	25V
C636	1-163-089-00	CERAMIC CHIP 6PF 0.5PF	50V
C638	1-164-004-11	CERAMIC CHIP 0.1μF 10%	25V
C639	1-104-913-11	TANTAL. CHIP 10μF 10%	16V
C646	1-164-004-11	CERAMIC CHIP 0.1μF 10%	25V
C647	1-164-004-11	CERAMIC CHIP 0.1μF 10%	25V
C648	1-104-607-11	ELECT CHIP 47μF 20%	16V
C649	1-104-913-11	TANTAL. CHIP 10μF 10%	16V
C651	1-164-004-11	CERAMIC CHIP 0.1μF 10%	25V
C652	1-104-913-11	TANTAL. CHIP 10μF 10%	16V
C655	1-104-607-11	ELECT CHIP 47μF 20%	16V
C656	1-164-004-11	CERAMIC CHIP 0.1μF 10%	25V
C658	1-164-004-11	CERAMIC CHIP 0.1μF 10%	25V
C665	1-164-222-11	CERAMIC CHIP 0.22μF	25V
C667	1-164-004-11	CERAMIC CHIP 0.1μF 10%	25V
C669	1-107-823-11	CERAMIC CHIP 0.47μF 10%	16V
C671	1-164-004-11	CERAMIC CHIP 0.1μF 10%	25V
C672	1-164-004-11	CERAMIC CHIP 0.1μF 10%	25V
C681	1-164-004-11	CERAMIC CHIP 0.1μF 10%	25V
C683	1-164-004-11	CERAMIC CHIP 0.1μF 10%	25V
C691	1-104-913-11	TANTAL. CHIP 10μF 10%	16V
C692	1-164-004-11	CERAMIC CHIP 0.1μF 10%	25V
C698	1-104-913-11	TANTAL. CHIP 10μF 10%	16V
C699	1-164-004-11	CERAMIC CHIP 0.1μF 10%	25V

CAR

Ref.No.	Part No.	Description	Remark
C701	1-107-781-11	ELECT CHIP 47µF 20% 16V	
C702	1-104-607-11	ELECT CHIP 47µF 20% 16V	
C703	1-164-004-11	CERAMIC CHIP 0.1µF 10% 25V	
C712	1-163-091-00	CERAMIC CHIP 8PF 0.25PF50V	
C718	1-164-004-11	CERAMIC CHIP 0.1µF 10% 25V	
C719	1-104-913-11	TANTAL. CHIP 10µF 10% 16V	
C722	1-164-004-11	CERAMIC CHIP 0.1µF 10% 25V	
C725	1-164-004-11	CERAMIC CHIP 0.1µF 10% 25V	
C726	1-164-004-11	CERAMIC CHIP 0.1µF 10% 25V	
C727	1-104-913-11	TANTAL. CHIP 10µF 10% 16V	
C732	1-164-004-11	CERAMIC CHIP 0.1µF 10% 25V	
C737	1-164-004-11	CERAMIC CHIP 0.1µF 10% 25V	
C738	1-164-004-11	CERAMIC CHIP 0.1µF 10% 25V	
C745	1-164-004-11	CERAMIC CHIP 0.1µF 10% 25V	
C751	1-164-004-11	CERAMIC CHIP 0.1µF 10% 25V	
C752	1-104-913-11	TANTAL. CHIP 10µF 10% 16V	
C755	1-104-913-11	TANTAL. CHIP 10µF 10% 16V	
C756	1-164-004-11	CERAMIC CHIP 0.1µF 10% 25V	
C758	1-164-004-11	CERAMIC CHIP 0.1µF 10% 25V	
C759	1-164-004-11	CERAMIC CHIP 0.1µF 10% 25V	
C760	1-164-004-11	CERAMIC CHIP 0.1µF 10% 25V	
C781	1-164-222-11	CERAMIC CHIP 0.22µF 25V	
C784	1-164-004-11	CERAMIC CHIP 0.1µF 10% 25V	
C785	1-164-004-11	CERAMIC CHIP 0.1µF 10% 25V	
C787	1-164-004-11	CERAMIC CHIP 0.1µF 10% 25V	
C789	1-164-004-11	CERAMIC CHIP 0.1µF 10% 25V	
C791	1-164-004-11	CERAMIC CHIP 0.1µF 10% 25V	
C793	1-107-823-11	CERAMIC CHIP 0.47µF 10% 16V	
C796	1-164-004-11	CERAMIC CHIP 0.1µF 10% 25V	
		<CONNECTOR>	
CN240	* 1-760-388-11	CONNECTOR PIN (SMD) 9 PIN	
CN242	* 1-691-551-11	PIN, CONNECTOR (SMD) 8P	
CN243	1-569-516-11	PIN, CONNECTOR 18P	
		<DIODE>	
D12	8-719-914-43	DIODE DAN202K	
D16	8-719-914-43	DIODE DAN202K	
D22	8-719-914-43	DIODE DAN202K	
D24	8-719-914-43	DIODE DAN202K	
D121	8-719-800-76	DIODE 1SS226	
D501	8-719-801-78	DIODE 1SS184	
D511	8-719-801-78	DIODE 1SS184	
D512	8-719-422-12	DIODE MA8039	
D525	8-719-801-78	DIODE 1SS184	
D527	8-719-801-78	DIODE 1SS184	
D581	8-719-801-78	DIODE 1SS184	
D611	8-719-800-76	DIODE 1SS226	
D612	8-719-801-78	DIODE 1SS184	
D615	8-719-800-76	DIODE 1SS226	
D625	8-719-800-76	DIODE 1SS226	
D650	8-719-056-73	DIODE UDZ-TE-17-2.7B	
D651	8-719-800-76	DIODE 1SS226	
D652	8-719-800-76	DIODE 1SS226	
D667	8-719-977-28	DIODE DTZ10B	
D672	8-719-800-76	DIODE 1SS226	
D691	8-719-056-73	DIODE UDZ-TE-17-2.7B	
D710	8-719-801-78	DIODE 1SS184	
D726	8-719-109-93	DIODE RD6.2ESB2	
D737	8-719-800-76	DIODE 1SS226	
D738	8-719-104-34	DIODE 1S2836	
D751	8-719-056-73	DIODE UDZ-TE-17-2.7B	
D787	8-719-977-28	DIODE DTZ10B	
		<FILTER>	
FL11	1-233-512-21	FERRITE 37µH	
FL12	1-233-512-21	FERRITE 37µH	
FL21	1-233-512-21	FERRITE 37µH	
FL101	1-233-512-21	FERRITE 37µH	
FL102	1-233-512-21	FERRITE 37µH	
FL103	1-233-512-21	FERRITE 37µH	
FL104	1-233-512-21	FERRITE 37µH	
FL111	1-233-283-11	FILTER, EMI (SMD)	
FL112	1-233-283-11	FILTER, EMI (SMD)	
FL113	1-233-283-11	FILTER, EMI (SMD)	
FL114	1-233-283-11	FILTER, EMI (SMD)	
		<IC>	
IC12	8-759-460-81	IC BA12FP-E2	
IC16	8-759-460-74	IC BA05FP-E2	
IC22	8-759-549-53	IC LM2990SX-12	
IC24	8-759-045-17	IC NJM79L05UA	
IC101	8-759-541-88	IC EPM7064STC44-10-PULSE	
IC102	8-759-564-62	IC MAX4224ESA-TG06	
IC141	8-759-381-53	IC UPC814G2-E2	
IC171	8-759-392-64	IC AD828AR	
IC560	8-759-710-78	IC NJM082BM-T1	
IC570	8-759-082-61	IC TC4W53FU	
IC595	8-759-542-11	IC MAX4223ESA-TG06	
IC661	8-759-381-53	IC UPC814G2-E2	
IC781	8-759-381-53	IC UPC814G2-E2	
		<JACK>	
J240	1-568-547-11	JACK, MINIATUER PIN	
		<COIL>	
L648	1-412-066-21	INDUCTOR CHIP 220µH	
		<TRANSISTOR>	
Q121	8-729-033-16	TRANSISTOR 2SA1669-TB	
Q133	8-729-112-65	TRANSISTOR 2SA1462-T1Y33	
Q141	8-729-116-05	TRANSISTOR 2SK160-K5	
Q441	8-729-107-31	TRANSISTOR 2SC3545-T43	
Q446	8-729-107-31	TRANSISTOR 2SC3545-T43	
Q447	8-729-216-22	TRANSISTOR 2SA1162-G	
Q451	8-729-107-31	TRANSISTOR 2SC3545-T43	
Q456	8-729-107-31	TRANSISTOR 2SC3545-T43	
Q457	8-729-216-22	TRANSISTOR 2SA1162-G	
Q501	8-729-033-16	TRANSISTOR 2SA1669-TB	
Q502	8-729-112-65	TRANSISTOR 2SA1462-T1Y33	

Ref.No.	Part No.	Description			Remark
Q510	8-729-129-54	TRANSISTOR 2SC2954			
Q511	8-729-129-54	TRANSISTOR 2SC2954			
Q525	8-729-107-31	TRANSISTOR 2SC3545-T43			
Q527	8-729-230-49	TRANSISTOR 2SC2712-YG			
Q540	8-729-216-22	TRANSISTOR 2SA1162-G			
Q551	8-729-129-54	TRANSISTOR 2SC2954			
Q563	8-729-230-49	TRANSISTOR 2SC2712-YG			
Q581	8-729-112-65	TRANSISTOR 2SA1462-T1Y33			
Q605	8-729-107-31	TRANSISTOR 2SC3545-T43			
Q610	8-729-033-16	TRANSISTOR 2SA1669-TB			
Q618	8-729-112-65	TRANSISTOR 2SA1462-T1Y33			
Q625	8-729-143-46	TRANSISTOR 2SC3356-R24			
Q631	8-729-143-46	TRANSISTOR 2SC3356-R24			
Q645	8-729-033-16	TRANSISTOR 2SA1669-TB			
Q647	8-729-107-31	TRANSISTOR 2SC3545-T43			
Q651	8-729-143-46	TRANSISTOR 2SC3356-R24			
Q656	8-729-129-54	TRANSISTOR 2SC2954			
Q665	8-729-116-05	TRANSISTOR 2SK160-K5			
Q671	8-729-107-31	TRANSISTOR 2SC3545-T43			
Q691	8-729-143-46	TRANSISTOR 2SC3356-R24			
Q692	8-729-033-16	TRANSISTOR 2SA1669-TB			
Q701	8-729-129-54	TRANSISTOR 2SC2954			
Q721	8-729-143-46	TRANSISTOR 2SC3356-R24			
Q723	8-729-107-31	TRANSISTOR 2SC3545-T43			
Q726	8-729-129-54	TRANSISTOR 2SC2954			
Q733	8-729-129-54	TRANSISTOR 2SC2954			
Q736	8-729-033-16	TRANSISTOR 2SA1669-TB			
Q738	8-729-112-65	TRANSISTOR 2SA1462-T1Y33			
Q741	8-729-112-65	TRANSISTOR 2SA1462-T1Y33			
Q751	8-729-143-46	TRANSISTOR 2SC3356-R24			
Q752	8-729-033-16	TRANSISTOR 2SA1669-TB			
Q781	8-729-116-05	TRANSISTOR 2SK160-K5			
Q797	8-729-230-49	TRANSISTOR 2SC2712-YG			
	<RESISTOR>				
R51	1-216-073-00	RES,CHIP	10K	5%	1/10W
R63	1-216-073-00	RES,CHIP	10K	5%	1/10W
R75	1-216-295-91	SHORT 0			
R76	1-216-295-91	SHORT 0			
R82	1-216-049-91	RES,CHIP	1K	5%	1/10W
R83	1-216-065-91	RES,CHIP	4.7K	5%	1/10W
R84	1-216-025-91	RES,CHIP	100	5%	1/10W
R85	1-216-025-91	RES,CHIP	100	5%	1/10W
R101	1-216-631-11	METAL CHIP	150	0.50%	1/10W
R102	1-216-631-11	METAL CHIP	150	0.50%	1/10W
R103	1-216-017-91	RES,CHIP	47	5%	1/10W
R105	1-216-642-11	METAL CHIP	430	0.50%	1/10W
R106	1-216-643-11	METAL CHIP	470	0.50%	1/10W
R121	1-216-017-91	RES,CHIP	47	5%	1/10W
R131	1-216-659-11	METAL CHIP	2.2K	0.50%	1/10W
R132	1-216-667-11	METAL CHIP	4.7K	0.50%	1/10W
R133	1-216-033-00	RES,CHIP	220	5%	1/10W
R135	1-216-647-11	METAL CHIP	680	0.50%	1/10W
R136	1-216-647-11	METAL CHIP	680	0.50%	1/10W
R140	1-216-049-91	RES,CHIP	1K	5%	1/10W
R141	1-216-121-91	RES,CHIP	1M	5%	1/10W
R142	1-216-025-91	RES,CHIP	100	5%	1/10W
R143	1-216-025-91	RES,CHIP	100	5%	1/10W

Ref.No.	Part No.	Description			Remark
R145	1-216-677-11	METAL CHIP	12K	0.50%	1/10W
R146	1-216-683-11	METAL CHIP	22K	0.50%	1/10W
R147	1-216-295-91	SHORT 0			
R148	1-216-049-91	RES,CHIP	1K	5%	1/10W
R151	1-216-073-00	RES,CHIP	10K	5%	1/10W
R155	1-216-057-00	RES,CHIP	2.2K	5%	1/10W
R171	1-216-025-91	RES,CHIP	100	5%	1/10W
R172	1-216-049-91	RES,CHIP	1K	5%	1/10W
R173	1-216-051-00	RES,CHIP	1.2K	5%	1/10W
R174	1-216-025-91	RES,CHIP	100	5%	1/10W
R180	1-216-025-91	RES,CHIP	100	5%	1/10W
R182	1-216-049-91	RES,CHIP	1K	5%	1/10W
R183	1-216-049-91	RES,CHIP	1K	5%	1/10W
R184	1-216-025-91	RES,CHIP	100	5%	1/10W
R441	1-216-065-91	RES,CHIP	4.7K	5%	1/10W
R445	1-216-065-91	RES,CHIP	4.7K	5%	1/10W
R446	1-216-025-91	RES,CHIP	100	5%	1/10W
R447	1-216-001-00	RES,CHIP	10	5%	1/10W
R448	1-216-025-91	RES,CHIP	100	5%	1/10W
R451	1-216-065-91	RES,CHIP	4.7K	5%	1/10W
R455	1-216-065-91	RES,CHIP	4.7K	5%	1/10W
R456	1-216-025-91	RES,CHIP	100	5%	1/10W
R457	1-216-001-00	RES,CHIP	10	5%	1/10W
R458	1-216-025-91	RES,CHIP	100	5%	1/10W
R501	1-216-033-00	RES,CHIP	220	5%	1/10W
R502	1-216-643-11	METAL CHIP	470	0.50%	1/10W
R503	1-216-033-00	RES,CHIP	220	5%	1/10W
R504	1-216-659-11	METAL CHIP	2.2K	0.50%	1/10W
R505	1-216-667-11	METAL CHIP	4.7K	0.50%	1/10W
R506	1-216-045-00	RES,CHIP	680	5%	1/10W
R507	1-216-045-00	RES,CHIP	680	5%	1/10W
R508	1-216-045-00	RES,CHIP	680	5%	1/10W
R509	1-216-045-00	RES,CHIP	680	5%	1/10W
R510	1-216-017-91	RES,CHIP	47	5%	1/10W
R511	1-216-033-00	RES,CHIP	220	5%	1/10W
R521	1-216-643-11	METAL CHIP	470	0.50%	1/10W
R523	1-216-057-00	RES,CHIP	2.2K	5%	1/10W
R524	1-216-065-91	RES,CHIP	4.7K	5%	1/10W
R525	1-216-081-00	RES,CHIP	22K	5%	1/10W
R526	1-216-057-00	RES,CHIP	2.2K	5%	1/10W
R527	1-216-073-00	RES,CHIP	10K	5%	1/10W
R540	1-216-033-00	RES,CHIP	220	5%	1/10W
R541	1-216-057-00	RES,CHIP	2.2K	5%	1/10W
R542	1-216-071-00	RES,CHIP	8.2K	5%	1/10W
R551	1-216-051-00	RES,CHIP	1.2K	5%	1/10W
R552	1-216-075-00	RES,CHIP	12K	5%	1/10W
R553	1-216-033-00	RES,CHIP	220	5%	1/10W
R554	1-220-273-11	RES,CHIP	1K	5%	1/2W
R560	1-216-049-91	RES,CHIP	1K	5%	1/10W
R561	1-216-675-11	METAL CHIP	10K	0.50%	1/10W
R562	1-216-675-11	METAL CHIP	10K	0.50%	1/10W
R563	1-216-033-00	RES,CHIP	220	5%	1/10W
R564	1-216-653-11	METAL CHIP	1.2K	0.50%	1/10W
R566	1-216-675-11	METAL CHIP	10K	0.50%	1/10W
R567	1-216-049-91	RES,CHIP	1K	5%	1/10W
R571	1-216-049-91	RES,CHIP	1K	5%	1/10W
R572	1-216-049-91	RES,CHIP	1K	5%	1/10W
R573	1-216-049-91	RES,CHIP	1K	5%	1/10W

CAR

Ref.No.	Part No.	Description			Remark
R581	1-216-033-00	RES,CHIP	220	5%	1/10W
R591	1-216-017-91	RES,CHIP	47	5%	1/10W
R592	1-216-295-91	SHORT 0			
R593	1-216-295-91	SHORT 0			
R595	1-216-043-91	RES,CHIP	560	5%	1/10W
R596	1-216-295-91	SHORT 0			
R605	1-216-033-00	RES,CHIP	220	5%	1/10W
R606	1-216-687-11	METAL CHIP	33K	0.50%	1/10W
R607	1-216-017-91	RES,CHIP	47	5%	1/10W
R609	1-216-295-91	SHORT 0			
R610	1-216-017-91	RES,CHIP	47	5%	1/10W
R616	1-216-653-11	METAL CHIP	1.2K	0.50%	1/10W
R617	1-216-667-11	METAL CHIP	4.7K	0.50%	1/10W
R618	1-216-025-91	RES,CHIP	100	5%	1/10W
R619	1-216-631-11	METAL CHIP	150	0.50%	1/10W
R621	1-216-659-11	METAL CHIP	2.2K	0.50%	1/10W
R622	1-216-627-11	METAL CHIP	100	0.50%	1/10W
R625	1-216-033-00	RES,CHIP	220	5%	1/10W
R631	1-216-017-91	RES,CHIP	47	5%	1/10W
R632	1-216-627-11	METAL CHIP	100	0.50%	1/10W
R633	1-216-627-11	METAL CHIP	100	0.50%	1/10W
R635	1-216-641-11	METAL CHIP	390	0.50%	1/10W
R636	1-216-635-11	METAL CHIP	220	0.50%	1/10W
R645	1-216-001-00	RES,CHIP	10	5%	1/10W
R646	1-216-073-00	RES,CHIP	10K	5%	1/10W
R647	1-216-033-00	RES,CHIP	220	5%	1/10W
R648	1-216-653-11	METAL CHIP	1.2K	0.50%	1/10W
R649	1-216-673-11	METAL CHIP	8.2K	0.50%	1/10W
R650	1-216-639-11	METAL CHIP	330	0.50%	1/10W
R651	1-216-017-91	RES,CHIP	47	5%	1/10W
R653	1-216-635-11	METAL CHIP	220	0.50%	1/10W
R654	1-216-627-11	METAL CHIP	100	0.50%	1/10W
R655	1-216-627-11	METAL CHIP	100	0.50%	1/10W
R656	1-216-635-11	METAL CHIP	220	0.50%	1/10W
R657	1-216-033-00	RES,CHIP	220	5%	1/10W
R658	1-216-667-11	METAL CHIP	4.7K	0.50%	1/10W
R659	1-216-653-11	METAL CHIP	1.2K	0.50%	1/10W
R661	1-216-049-91	RES,CHIP	1K	5%	1/10W
R665	1-216-121-91	RES,CHIP	1M	5%	1/10W
R666	1-216-049-91	RES,CHIP	1K	5%	1/10W
R667	1-216-073-00	RES,CHIP	10K	5%	1/10W
R668	1-216-049-91	RES,CHIP	1K	5%	1/10W
R669	1-216-081-00	RES,CHIP	22K	5%	1/10W
R672	1-216-025-91	RES,CHIP	100	5%	1/10W
R675	1-216-627-11	METAL CHIP	100	0.50%	1/10W
R676	1-216-001-00	RES,CHIP	10	5%	1/10W
R681	1-216-677-11	METAL CHIP	12K	0.50%	1/10W
R683	1-216-669-11	METAL CHIP	5.6K	0.50%	1/10W
R691	1-216-017-91	RES,CHIP	47	5%	1/10W
R692	1-216-017-91	RES,CHIP	47	5%	1/10W
R693	1-216-001-00	RES,CHIP	10	5%	1/10W
R695	1-216-001-00	RES,CHIP	10	5%	1/10W
R696	1-216-001-00	RES,CHIP	10	5%	1/10W
R698	1-220-273-11	RES,CHIP	1K	5%	1/2W
R699	1-220-273-11	RES,CHIP	1K	5%	1/2W
R701	1-216-017-91	RES,CHIP	47	5%	1/10W
R704	1-216-635-11	METAL CHIP	220	0.50%	1/10W
R710	1-216-065-91	RES,CHIP	4.7K	5%	1/10W
R711	1-216-637-11	METAL CHIP	270	0.50%	1/10W
R712	1-216-635-11	METAL CHIP	220	0.50%	1/10W
R717	1-216-627-11	METAL CHIP	100	0.50%	1/10W
R719	1-216-643-11	METAL CHIP	470	0.50%	1/10W
R720	1-216-635-11	METAL CHIP	220	0.50%	1/10W
R721	1-216-017-91	RES,CHIP	47	5%	1/10W
R722	1-216-057-00	RES,CHIP	2.2K	5%	1/10W
R723	1-216-025-91	RES,CHIP	100	5%	1/10W
R724	1-216-667-11	METAL CHIP	4.7K	0.50%	1/10W
R725	1-216-657-11	METAL CHIP	1.8K	0.50%	1/10W
R726	1-216-017-91	RES,CHIP	47	5%	1/10W
R727	1-216-017-91	RES,CHIP	47	5%	1/10W
R731	1-216-667-11	METAL CHIP	4.7K	0.50%	1/10W
R732	1-216-669-11	METAL CHIP	5.6K	0.50%	1/10W
R733	1-216-025-91	RES,CHIP	100	5%	1/10W
R734	1-220-269-11	RES,CHIP	330	5%	1/2W
R735	1-220-274-11	RES,CHIP	1.2K	5%	1/2W
R736	1-216-017-91	RES,CHIP	47	5%	1/10W
R737	1-220-274-11	RES,CHIP	1.2K	5%	1/2W
R738	1-216-033-00	RES,CHIP	220	5%	1/10W
R739	1-216-653-11	METAL CHIP	1.2K	0.50%	1/10W
R740	1-216-667-11	METAL CHIP	4.7K	0.50%	1/10W
R741	1-216-033-00	RES,CHIP	220	5%	1/10W
R742	1-216-659-11	METAL CHIP	2.2K	0.50%	1/10W
R743	1-216-651-11	METAL CHIP	1K	0.50%	1/10W
R745	1-216-659-11	METAL CHIP	2.2K	0.50%	1/10W
R746	1-216-669-11	METAL CHIP	5.6K	0.50%	1/10W
R751	1-216-017-91	RES,CHIP	47	5%	1/10W
R752	1-216-017-91	RES,CHIP	47	5%	1/10W
R753	1-216-001-00	RES,CHIP	10	5%	1/10W
R754	1-216-635-11	METAL CHIP	220	0.50%	1/10W
R755	1-216-635-11	METAL CHIP	220	0.50%	1/10W
R756	1-216-001-00	RES,CHIP	10	5%	1/10W
R757	1-216-001-00	RES,CHIP	10	5%	1/10W
R758	1-220-273-11	RES,CHIP	1K	5%	1/2W
R759	1-220-273-11	RES,CHIP	1K	5%	1/2W
R781	1-216-049-91	RES,CHIP	1K	5%	1/10W
R782	1-216-121-91	RES,CHIP	1M	5%	1/10W
R783	1-216-049-91	RES,CHIP	1K	5%	1/10W
R784	1-216-677-11	METAL CHIP	12K	0.50%	1/10W
R785	1-216-659-11	METAL CHIP	2.2K	0.50%	1/10W
R786	1-216-651-11	METAL CHIP	1K	0.50%	1/10W
R787	1-216-049-91	RES,CHIP	1K	5%	1/10W
R789	1-216-049-91	RES,CHIP	1K	5%	1/10W
R791	1-216-073-00	RES,CHIP	10K	5%	1/10W
R795	1-216-675-11	METAL CHIP	10K	0.50%	1/10W
R796	1-216-675-11	METAL CHIP	10K	0.50%	1/10W
R797	1-216-025-91	RES,CHIP	100	5%	1/10W
R798	1-216-057-00	RES,CHIP	2.2K	5%	1/10W
R801	1-216-017-91	RES,CHIP	47	5%	1/10W

<RESISTOR BLOCK>

RB51	1-233-576-11	RES, CHIP	NETWORK 100
RB71	1-233-414-11	RES, CHIP	NETWORK 4.7K (3216)
RB72	1-233-576-11	RES, CHIP	NETWORK 100
RB81	1-233-576-11	RES, CHIP	NETWORK 100

Ref.No.	Part No.	Description	Remark
	<VARIABLE RESISTOR>		
RV145	1-230-871-11	RES, ADJ, METAL GLAZE 22K	
RV622	1-238-785-21	RES, ADJ, CERMET 2K	
RV623	1-238-783-11	RES, ADJ, CERMET 500	
RV682	1-238-786-11	RES, ADJ, CERMET 5K	
RV718	1-238-785-21	RES, ADJ, CERMET 2K	
RV785	1-238-786-11	RES, ADJ, CERMET 5K	
RV796	1-230-871-11	RES, ADJ, METAL GLAZE 22K	
	<SWITCH>		
S796	1-571-674-11	SWITCH, SLIDE	
	<TEST PIN>		
TP21	1-535-757-11	CHIP, CHECKER	
TP22	1-535-757-11	CHIP, CHECKER	
TP23	1-535-757-11	CHIP, CHECKER	
TP24	1-535-757-11	CHIP, CHECKER	
TP34	1-535-757-11	CHIP, CHECKER	
TP35	1-535-757-11	CHIP, CHECKER	
TP71	1-535-757-11	CHIP, CHECKER	
TP72	1-535-757-11	CHIP, CHECKER	
TP73	1-535-757-11	CHIP, CHECKER	
TP501	1-535-757-11	CHIP, CHECKER	
TP511	1-535-757-11	CHIP, CHECKER	
TP691	1-535-757-11	CHIP, CHECKER	
TP751	1-535-757-11	CHIP, CHECKER	

****

CDR MOUNTED PC BOARD
****

Ref.No.	Part No.	Description	Remark
	<CAPACITOR>		
C800	1-128-304-11	ELECT CHIP 330μF 20% 16V	
C801	1-164-004-11	CERAMIC CHIP 0.1μF 10% 25V	
C802	1-104-913-11	TANTAL. CHIP 10μF 10% 16V	
C803	1-104-913-11	TANTAL. CHIP 10μF 10% 16V	
C805	1-164-004-11	CERAMIC CHIP 0.1μF 10% 25V	
C811	1-124-779-00	ELECT CHIP 10μF 20% 16V	
C812	1-164-004-11	CERAMIC CHIP 0.1μF 10% 25V	
C815	1-163-251-11	CERAMIC CHIP 100PF 5% 50V	
C816	1-163-227-11	CERAMIC CHIP 10PF 0.5PF 50V	
C817	1-163-121-00	CERAMIC CHIP 150PF 5% 50V	
C818	1-162-117-00	CERAMIC 100PF 10% 500V	
C820	1-107-961-91	ELECT 10μF 20% 250V	
C821	1-102-050-00	CERAMIC 0.01μF 99% 500V	
C822	1-107-943-11	ELECT 10μF 20% 160V	
C823	1-164-004-11	CERAMIC CHIP 0.1μF 10% 25V	
C824	1-164-004-11	CERAMIC CHIP 0.1μF 10% 25V	
C826	1-126-397-11	ELECT CHIP 33μF 20% 25V	
C827	1-164-004-11	CERAMIC CHIP 0.1μF 10% 25V	
C828	1-164-506-11	CERAMIC CHIP 4.7μF 16V	
C829	1-164-506-11	CERAMIC CHIP 4.7μF 16V	
C830	1-164-004-11	CERAMIC CHIP 0.1μF 10% 25V	
C832	1-164-004-11	CERAMIC CHIP 0.1μF 10% 25V	
C833	1-102-050-00	CERAMIC 0.01μF 99% 500V	
C834	1-107-961-91	ELECT 10μF 20% 250V	
C851	1-110-648-11	ELECT CHIP 220μF 20% 25V	
C852	1-128-304-11	ELECT CHIP 330μF 20% 16V	
C853	1-164-004-11	CERAMIC CHIP 0.1μF 10% 25V	
C854	1-104-913-11	TANTAL. CHIP 10μF 10% 16V	
C862	1-128-304-11	ELECT CHIP 330μF 20% 16V	
C901	1-164-004-11	CERAMIC CHIP 0.1μF 10% 25V	
C902	1-164-004-11	CERAMIC CHIP 0.1μF 10% 25V	
C903	1-164-004-11	CERAMIC CHIP 0.1μF 10% 25V	
C904	1-104-913-11	TANTAL. CHIP 10μF 10% 16V	
C905	1-164-004-11	CERAMIC CHIP 0.1μF 10% 25V	
C906	1-104-913-11	TANTAL. CHIP 10μF 10% 16V	
C911	1-124-779-00	ELECT CHIP 10μF 20% 16V	
C912	1-164-004-11	CERAMIC CHIP 0.1μF 10% 25V	
C913	1-163-249-11	CERAMIC CHIP 82PF 5% 50V	
C914	1-163-235-11	CERAMIC CHIP 22PF 5% 50V	
C915	1-163-243-11	CERAMIC CHIP 47PF 5% 50V	
C953	1-164-004-11	CERAMIC CHIP 0.1μF 10% 25V	
C954	1-104-913-11	TANTAL. CHIP 10μF 10% 16V	
C956	1-162-117-00	CERAMIC 100PF 10% 500V	
C957	1-102-050-00	CERAMIC 0.01μF 99% 500V	
C958	1-107-943-11	ELECT 10μF 20% 160V	
C961	1-102-038-00	CERAMIC 0.001μF 500V	
C962	1-163-275-11	CERAMIC CHIP 0.001μF 5% 50V	
C965	1-164-004-11	CERAMIC CHIP 0.1μF 10% 25V	
C968	1-164-004-11	CERAMIC CHIP 0.1μF 10% 25V	
C969	1-164-004-11	CERAMIC CHIP 0.1μF 10% 25V	
C970	1-164-004-11	CERAMIC CHIP 0.1μF 10% 25V	
C971	1-124-779-00	ELECT CHIP 10μF 20% 16V	
C973	1-164-004-11	CERAMIC CHIP 0.1μF 10% 25V	
C974	1-164-004-11	CERAMIC CHIP 0.1μF 10% 25V	
C977	1-164-004-11	CERAMIC CHIP 0.1μF 10% 25V	
C982	1-163-251-11	CERAMIC CHIP 100PF 5% 50V	
C991	1-164-004-11	CERAMIC CHIP 0.1μF 10% 25V	
C992	1-164-004-11	CERAMIC CHIP 0.1μF 10% 25V	
C993	1-164-004-11	CERAMIC CHIP 0.1μF 10% 25V	
C995	1-163-251-11	CERAMIC CHIP 100PF 5% 50V	
C996	1-164-004-11	CERAMIC CHIP 0.1μF 10% 25V	
C997	1-164-004-11	CERAMIC CHIP 0.1μF 10% 25V	
C998	1-164-506-11	CERAMIC CHIP 4.7μF 16V	
C999	1-164-506-11	CERAMIC CHIP 4.7μF 16V	
C1000	1-164-004-11	CERAMIC CHIP 0.1μF 10% 25V	
C1002	1-164-004-11	CERAMIC CHIP 0.1μF 10% 25V	
C1201	1-107-943-11	ELECT 10μF 20% 160V	
C1210	1-107-943-11	ELECT 10μF 20% 160V	
C1211	1-107-823-11	CERAMIC CHIP 0.47μF 10% 16V	
C1212	1-164-004-11	CERAMIC CHIP 0.1μF 10% 25V	
C1213	1-164-004-11	CERAMIC CHIP 0.1μF 10% 25V	
C1214	1-164-004-11	CERAMIC CHIP 0.1μF 10% 25V	
C1215	1-164-004-11	CERAMIC CHIP 0.1μF 10% 25V	
C1221	1-107-943-11	ELECT 10μF 20% 160V	
	<CONNECTOR>		
CN244	* 1-564-726-11	PIN, CONNECTOR (SMALL TYPE) OP	
CN245	* 1-564-507-11	PLUG, CONNECTOR 4P	
CN246	* 1-564-507-11	PLUG, CONNECTOR 4P	

CDR

Ref.No.	Part No.	Description	Remark
CN249	* 1-564-518-11	PLUG, CONNECTOR 3P	
CN250	* 1-785-522-11	PIN, CONNECTOR (PC BOARD) 18P	
	<DIODE>		
D801	8-719-800-76	DIODE 1SS226	
D806	8-719-978-04	DIODE DTZ-TT11-3.3B	
D811	8-719-901-83	DIODE 1SS83	
D812	8-719-901-83	DIODE 1SS83	
D820	8-719-800-76	DIODE 1SS226	
D821	8-719-106-53	DIODE RD10M-B2	
D831	8-719-107-24	DIODE RD20M-B2	
D832	8-719-901-83	DIODE 1SS83	
D833	8-719-901-83	DIODE 1SS83	
D841	8-719-901-83	DIODE 1SS83	
D842	8-719-901-83	DIODE 1SS83	
D851	8-719-914-43	DIODE DAN202K	
D861	8-719-914-43	DIODE DAN202K	
D901	8-719-800-76	DIODE 1SS226	
D906	8-719-978-04	DIODE DTZ-TT11-3.3B	
D941	8-719-901-83	DIODE 1SS83	
D942	8-719-901-83	DIODE 1SS83	
D945	8-719-018-98	DIODE 1SS311(TE85L)	
D955	8-719-800-76	DIODE 1SS226	
D956	8-719-106-53	DIODE RD10M-B2	
D960	8-719-801-78	DIODE 1SS184	
D961	8-719-800-76	DIODE 1SS226	
D965	8-719-105-82	DIODE RD5.1M-B2	
D981	8-719-106-53	DIODE RD10M-B2	
D982	8-719-800-76	DIODE 1SS226	
D1001	8-719-976-96	DIODE DTZ4.7C	
D1211	8-719-800-76	DIODE 1SS226	
D1215	8-719-106-53	DIODE RD10M-B2	
	<FILTER>		
FL1001	1-233-831-11	FILTER, EMI	
FL1002	1-233-831-11	FILTER, EMI	
FL1011	1-233-512-21	FERRITE 37μH	
FL1012	1-233-512-21	FERRITE 37μH	
FL1013	1-233-512-21	FERRITE 37μH	
FL1014	1-233-512-21	FERRITE 37μH	
	<IC>		
IC801	8-749-014-86	IC VPJ15H	
IC802	8-759-710-78	IC NJM082BM-T1	
IC851	8-759-460-81	IC BA12FP-E2	
IC861	8-759-335-28	IC TA78M09F(TE16L)	
IC901	8-749-014-86	IC VPJ15H	
IC902	8-759-381-53	IC UPC814G2-E2	
IC961	8-749-011-45	IC NJL5152MD	
IC971	8-759-710-78	IC NJM082BM-T1	
IC981	8-759-234-77	IC TC4S66F	
IC990	8-759-710-78	IC NJM082BM-T1	
IC998	8-759-710-78	IC NJM082BM-T1	
IC1211	8-759-198-34	IC TA75S558F	

Ref.No.	Part No.	Description	Remark
	<COIL>		
L801	1-412-533-21	INDUCTOR 47μH	
L818	1-414-137-31	INDUCTOR 0.22μH	
L951	1-412-533-21	INDUCTOR 47μH	
L954	1-414-137-31	INDUCTOR 0.22μH	
L955	1-414-137-31	INDUCTOR 0.22μH	
L956	1-414-137-31	INDUCTOR 0.22μH	
L957	1-414-137-31	INDUCTOR 0.22μH	
	<TRANSISTOR>		
Q801	8-729-033-16	TRANSISTOR 2SA1669-TB	
Q802	8-729-112-65	TRANSISTOR 2SA1462-T1Y33	
Q806	8-729-145-13	TRANSISTOR 2SC3356-(R25)	
Q807	8-729-033-16	TRANSISTOR 2SA1669-TB	
Q815	8-729-116-05	TRANSISTOR 2SK160-K5	
Q819	8-729-801-88	TRANSISTOR 2SA1381-E	
Q821	8-729-821-02	TRANSISTOR 2SC3503-DE	
Q901	8-729-033-16	TRANSISTOR 2SA1669-TB	
Q902	8-729-112-65	TRANSISTOR 2SA1462-T1Y33	
Q906	8-729-145-13	TRANSISTOR 2SC3356-(R25)	
Q907	8-729-033-16	TRANSISTOR 2SA1669-TB	
Q948	8-729-804-63	TRANSISTOR 2SA1406-E	
Q961	1-801-806-11	TRANSISTOR DTC144EKA-T146	
Q974	8-729-230-49	TRANSISTOR 2SC2712-YG	
Q1204	8-729-821-02	TRANSISTOR 2SC3503-DE	
Q1210	8-729-111-07	TRANSISTOR 2SD1590-L	
	<RESISTOR>		
R801	1-216-017-91	RES,CHIP 47 5% 1/10W	
R802	1-216-033-00	RES,CHIP 220 5% 1/10W	
R803	1-216-025-91	RES,CHIP 100 5% 1/10W	
R804	1-216-653-11	METAL CHIP 1.2K 0.50% 1/10W	
R805	1-216-667-11	METAL CHIP 4.7K 0.50% 1/10W	
R806	1-216-017-91	RES,CHIP 47 5% 1/10W	
R807	1-216-017-91	RES,CHIP 47 5% 1/10W	
R808	1-216-001-00	RES,CHIP 10 5% 1/10W	
R809	1-216-001-00	RES,CHIP 10 5% 1/10W	
R810	1-216-001-00	RES,CHIP 10 5% 1/10W	
R811	1-216-627-11	METAL CHIP 100 0.50% 1/10W	
R814	1-216-619-11	METAL CHIP 47 0.50% 1/10W	
R815	1-249-401-11	CARBON 47 5% 1/4W	F
R819	1-216-033-00	RES,CHIP 220 5% 1/10W	
R820	1-216-049-91	RES,CHIP 1K 5% 1/10W	
R821	1-215-485-00	METAL 470K 1% 1/4W	
R822	1-215-485-00	METAL 470K 1% 1/4W	
R823	1-215-461-00	METAL 47K 1% 1/4W	
R824	1-216-121-91	RES,CHIP 1M 5% 1/10W	
R825	1-216-025-91	RES,CHIP 100 5% 1/10W	
R826	1-216-075-00	RES,CHIP 12K 5% 1/10W	
R827	1-216-667-11	METAL CHIP 4.7K 0.50% 1/10W	
R828	1-216-675-11	METAL CHIP 10K 0.50% 1/10W	
R829	1-216-057-00	RES,CHIP 2.2K 5% 1/10W	
R830	1-216-667-11	METAL CHIP 4.7K 0.50% 1/10W	
R831	1-215-461-00	METAL 47K 1% 1/4W	
R832	1-249-417-11	CARBON 1K 5% 1/4W	
R833	1-249-417-11	CARBON 1K 5% 1/4W	

Ref.No.	Part No.	Description			Remark
R841	1-215-477-00	METAL	220K	1%	1/4W
R851	1-220-274-11	RES,CHIP	1.2K	5%	1/2W
R852	1-220-274-11	RES,CHIP	1.2K	5%	1/2W
R901	1-216-017-91	RES,CHIP	47	5%	1/10W
R902	1-216-033-00	RES,CHIP	220	5%	1/10W
R903	1-216-025-91	RES,CHIP	100	5%	1/10W
R904	1-216-653-11	METAL CHIP	1.2K	0.50%	1/10W
R905	1-216-667-11	METAL CHIP	4.7K	0.50%	1/10W
R906	1-216-017-91	RES,CHIP	47	5%	1/10W
R907	1-216-017-91	RES,CHIP	47	5%	1/10W
R908	1-216-001-00	RES,CHIP	10	5%	1/10W
R909	1-216-001-00	RES,CHIP	10	5%	1/10W
R910	1-216-001-00	RES,CHIP	10	5%	1/10W
R911	1-216-627-11	METAL CHIP	100	0.50%	1/10W
R912	1-216-619-11	METAL CHIP	47	0.50%	1/10W
R919	1-216-033-00	RES,CHIP	220	5%	1/10W
R921	1-215-485-00	METAL	470K	1%	1/4W
R922	1-215-485-00	METAL	470K	1%	1/4W
R923	1-215-445-00	METAL	10K	1%	1/4W
R924	1-216-049-91	RES,CHIP	1K	5%	1/10W
R925	1-216-025-91	RES,CHIP	100	5%	1/10W
R951	1-220-274-11	RES,CHIP	1.2K	5%	1/2W
R952	1-220-274-11	RES,CHIP	1.2K	5%	1/2W
R955	1-249-401-11	CARBON	47	5%	1/4W F
R957	1-215-493-00	METAL	1M	1%	1/4W
R958	1-219-741-91	CARBON	10	5%	1/2W
R959	1-219-743-11	CARBON	100	5%	1/2W
R960	1-216-649-11	METAL CHIP	820	0.50%	1/10W
R961	1-216-683-11	METAL CHIP	22K	0.50%	1/10W
R967	1-216-025-91	RES,CHIP	100	5%	1/10W
R971	1-216-025-91	RES,CHIP	100	5%	1/10W
R972	1-216-653-11	METAL CHIP	1.2K	0.50%	1/10W
R973	1-216-653-11	METAL CHIP	1.2K	0.50%	1/10W
R974	1-216-073-00	RES,CHIP	10K	5%	1/10W
R975	1-216-045-00	RES,CHIP	680	5%	1/10W
R976	1-216-675-11	METAL CHIP	10K	0.50%	1/10W
R977	1-216-073-00	RES,CHIP	10K	5%	1/10W
R978	1-216-025-91	RES,CHIP	100	5%	1/10W
R979	1-216-025-91	RES,CHIP	100	5%	1/10W
R982	1-216-065-91	RES,CHIP	4.7K	5%	1/10W
R983	1-216-089-91	RES,CHIP	47K	5%	1/10W
R984	1-216-017-91	RES,CHIP	47	5%	1/10W
R990	1-216-025-91	RES,CHIP	100	5%	1/10W
R991	1-216-673-11	METAL CHIP	8.2K	0.50%	1/10W
R992	1-216-673-11	METAL CHIP	8.2K	0.50%	1/10W
R993	1-216-049-91	RES,CHIP	1K	5%	1/10W
R994	1-216-025-91	RES,CHIP	100	5%	1/10W
R995	1-216-025-91	RES,CHIP	100	5%	1/10W
R996	1-216-675-11	METAL CHIP	10K	0.50%	1/10W
R997	1-216-659-11	METAL CHIP	2.2K	0.50%	1/10W
R998	1-216-105-91	RES,CHIP	220K	5%	1/10W
R999	1-216-049-91	RES,CHIP	1K	5%	1/10W
R1001	1-216-057-00	RES,CHIP	2.2K	5%	1/10W
R1007	1-216-619-11	METAL CHIP	47	0.50%	1/10W
R1201	1-215-439-00	METAL	5.6K	1%	1/4W
R1202	1-215-455-00	METAL	27K	1%	1/4W
R1203	1-216-667-11	METAL CHIP	4.7K	0.50%	1/10W
R1204	1-216-025-91	RES,CHIP	100	5%	1/10W

Ref.No.	Part No.	Description			Remark
R1211	1-216-049-91	RES,CHIP	1K	5%	1/10W
R1212	1-216-073-00	RES,CHIP	10K	5%	1/10W
R1213	1-216-675-11	METAL CHIP	10K	0.50%	1/10W
R1214	1-216-675-11	METAL CHIP	10K	0.50%	1/10W
R1221	1-215-477-00	METAL	220K	1%	1/4W
R1222	1-215-485-00	METAL	470K	1%	1/4W
R1223	1-216-699-11	METAL CHIP	100K	0.50%	1/10W
R1224	1-216-683-11	METAL CHIP	22K	0.50%	1/10W
	<VARIABLE RESISTOR>				
⊠RV965 ⚠		RES, ADJ, CERMET 2K			
RV1223	1-238-804-11	RES, ADJ, CERMET 50K			
	<SWITCH>				
S796	1-571-674-11	SWITCH, SLIDE			
	<TEST PIN>				
TP21	1-535-757-11	CHIP, CHECKER			
TP22	1-535-757-11	CHIP, CHECKER			
TP23	1-535-757-11	CHIP, CHECKER			
TP24	1-535-757-11	CHIP, CHECKER			
TP34	1-535-757-11	CHIP, CHECKER			
TP35	1-535-757-11	CHIP, CHECKER			
TP71	1-535-757-11	CHIP, CHECKER			
TP72	1-535-757-11	CHIP, CHECKER			
TP73	1-535-757-11	CHIP, CHECKER			
TP501	1-535-757-11	CHIP, CHECKER			
TP511	1-535-757-11	CHIP, CHECKER			
TP691	1-535-757-11	CHIP, CHECKER			
TP751	1-535-757-11	CHIP, CHECKER			

****

	* A-1335-106-A	CG COMPLETE PC BOARD (Include CAG, CDG Mounted PC BOARD)
		**********
	3-701-809-31	SCREW, TERMINAL (M3X8)
	4-057-640-01	COVER, VOLUME
	* 4-067-812-01	HOLDER (C), TR
	* 4-067-820-01	HOLDER (VP)
	* 7-322-065-72	RUBBER, RTV (SE-9168) (130G)
	7-682-652-09	SCREW +PS 3X16
	7-682-949-01	SCREW +PSW 3X10

****

CAG MOUNTED PC BOARD
****

<CAPACITOR>

C11	1-110-648-11	ELECT CHIP	220μF	20%	25V
C12	1-128-304-11	ELECT CHIP	330μF	20%	16V
C15	1-128-361-11	ELECT CHIP	470μF	20%	10V

CAG

Ref.No.	Part No.	Description	Remark
C16	1-128-361-11	ELECT CHIP 470μF 20%	10V
C21	1-110-648-11	ELECT CHIP 220μF 20%	25V
C22	1-128-304-11	ELECT CHIP 330μF 20%	16V
C24	1-128-361-11	ELECT CHIP 470μF 20%	10V
C51	1-164-004-11	CERAMIC CHIP 0.1μF 10%	25V
C61	1-164-004-11	CERAMIC CHIP 0.1μF 10%	25V
C71	1-164-004-11	CERAMIC CHIP 0.1μF 10%	25V
C81	1-164-004-11	CERAMIC CHIP 0.1μF 10%	25V
C105	1-164-004-11	CERAMIC CHIP 0.1μF 10%	25V
C106	1-104-913-11	TANTAL. CHIP 10μF 10%	16V
C107	1-164-004-11	CERAMIC CHIP 0.1μF 10%	25V
C108	1-104-913-11	TANTAL. CHIP 10μF 10%	16V
C111	1-126-392-11	ELECT CHIP 100μF 20%	6.3V
C132	1-164-004-11	CERAMIC CHIP 0.1μF 10%	25V
C135	1-164-004-11	CERAMIC CHIP 0.1μF 10%	25V
C136	1-126-394-11	ELECT CHIP 10μF 20%	16V
C141	1-163-021-91	CERAMIC CHIP 0.01μF 10%	50V
C142	1-163-009-11	CERAMIC CHIP 0.001μF 10%	50V
C146	1-164-004-11	CERAMIC CHIP 0.1μF 10%	25V
C151	1-163-017-00	CERAMIC CHIP 0.0047μF 10%	50V
C152	1-163-017-00	CERAMIC CHIP 0.0047μF 10%	50V
C153	1-164-004-11	CERAMIC CHIP 0.1μF 10%	25V
C154	1-164-004-11	CERAMIC CHIP 0.1μF 10%	25V
C171	1-164-004-11	CERAMIC CHIP 0.1μF 10%	25V
C172	1-135-177-21	TANTAL. CHIP 1μF 20%	16V
C173	1-164-004-11	CERAMIC CHIP 0.1μF 10%	25V
C174	1-135-177-21	TANTAL. CHIP 1μF 20%	16V
C441	1-163-001-11	CERAMIC CHIP 220PF 10%	50V
C444	1-135-177-21	TANTAL. CHIP 1μF 20%	16V
C445	1-164-004-11	CERAMIC CHIP 0.1μF 10%	25V
C446	1-163-001-11	CERAMIC CHIP 220PF 10%	50V
C451	1-163-001-11	CERAMIC CHIP 220PF 10%	50V
C454	1-135-177-21	TANTAL. CHIP 1μF 20%	16V
C455	1-164-004-11	CERAMIC CHIP 0.1μF 10%	25V
C456	1-163-001-11	CERAMIC CHIP 220PF 10%	50V
C502	1-104-607-11	ELECT CHIP 47μF 20%	16V
C503	1-164-004-11	CERAMIC CHIP 0.1μF 10%	25V
C505	1-164-004-11	CERAMIC CHIP 0.1μF 10%	25V
C506	1-164-004-11	CERAMIC CHIP 0.1μF 10%	25V
C511	1-104-913-11	TANTAL. CHIP 10μF 10%	16V
C512	1-164-004-11	CERAMIC CHIP 0.1μF 10%	25V
C513	1-164-004-11	CERAMIC CHIP 0.1μF 10%	25V
C514	1-164-004-11	CERAMIC CHIP 0.1μF 10%	25V
C515	1-104-913-11	TANTAL. CHIP 10μF 10%	16V
C516	1-104-913-11	TANTAL. CHIP 10μF 10%	16V
C525	1-126-394-11	ELECT CHIP 10μF 20%	16V
C526	1-164-004-11	CERAMIC CHIP 0.1μF 10%	25V
C527	1-164-004-11	CERAMIC CHIP 0.1μF 10%	25V
C540	1-164-004-11	CERAMIC CHIP 0.1μF 10%	25V
C551	1-164-004-11	CERAMIC CHIP 0.1μF 10%	25V
C552	1-164-004-11	CERAMIC CHIP 0.1μF 10%	25V
C560	1-164-004-11	CERAMIC CHIP 0.1μF 10%	25V
C561	1-164-004-11	CERAMIC CHIP 0.1μF 10%	25V
C562	1-164-004-11	CERAMIC CHIP 0.1μF 10%	25V
C571	1-164-004-11	CERAMIC CHIP 0.1μF 10%	25V
C572	1-164-004-11	CERAMIC CHIP 0.1μF 10%	25V
C573	1-164-004-11	CERAMIC CHIP 0.1μF 10%	25V
C591	1-164-004-11	CERAMIC CHIP 0.1μF 10%	25V
C592	1-104-913-11	TANTAL. CHIP 10μF 10%	16V
C593	1-164-004-11	CERAMIC CHIP 0.1μF 10%	25V
C594	1-104-913-11	TANTAL. CHIP 10μF 10%	16V
C606	1-164-004-11	CERAMIC CHIP 0.1μF 10%	25V
C610	1-104-607-11	ELECT CHIP 47μF 20%	16V
C611	1-164-004-11	CERAMIC CHIP 0.1μF 10%	25V
C612	1-164-004-11	CERAMIC CHIP 0.1μF 10%	25V
C617	1-164-004-11	CERAMIC CHIP 0.1μF 10%	25V
C621	1-104-913-11	TANTAL. CHIP 10μF 10%	16V
C622	1-164-004-11	CERAMIC CHIP 0.1μF 10%	25V
C631	1-126-767-11	ELECT 1000μF 20%	16V
C632	1-164-004-11	CERAMIC CHIP 0.1μF 10%	25V
C636	1-163-089-00	CERAMIC CHIP 6PF 0.5PF	50V
C638	1-164-004-11	CERAMIC CHIP 0.1μF 10%	25V
C639	1-104-913-11	TANTAL. CHIP 10μF 10%	16V
C646	1-164-004-11	CERAMIC CHIP 0.1μF 10%	25V
C647	1-164-004-11	CERAMIC CHIP 0.1μF 10%	25V
C648	1-104-607-11	ELECT CHIP 47μF 20%	16V
C649	1-104-913-11	TANTAL. CHIP 10μF 10%	16V
C651	1-164-004-11	CERAMIC CHIP 0.1μF 10%	25V
C652	1-104-913-11	TANTAL. CHIP 10μF 10%	16V
C655	1-104-607-11	ELECT CHIP 47μF 20%	16V
C656	1-164-004-11	CERAMIC CHIP 0.1μF 10%	25V
C658	1-164-004-11	CERAMIC CHIP 0.1μF 10%	25V
C665	1-164-222-11	CERAMIC CHIP 0.22μF	25V
C667	1-164-004-11	CERAMIC CHIP 0.1μF 10%	25V
C669	1-107-823-11	CERAMIC CHIP 0.47μF 10%	16V
C671	1-164-004-11	CERAMIC CHIP 0.1μF 10%	25V
C672	1-164-004-11	CERAMIC CHIP 0.1μF 10%	25V
C681	1-164-004-11	CERAMIC CHIP 0.1μF 10%	25V
C683	1-164-004-11	CERAMIC CHIP 0.1μF 10%	25V
C691	1-104-913-11	TANTAL. CHIP 10μF 10%	16V
C692	1-164-004-11	CERAMIC CHIP 0.1μF 10%	25V
C698	1-104-913-11	TANTAL. CHIP 10μF 10%	16V
C699	1-164-004-11	CERAMIC CHIP 0.1μF 10%	25V
C701	1-107-781-11	ELECT CHIP 47μF 20%	16V
C702	1-104-607-11	ELECT CHIP 47μF 20%	16V
C703	1-164-004-11	CERAMIC CHIP 0.1μF 10%	25V
C712	1-163-091-00	CERAMIC CHIP 8PF 0.25PF	50V
C718	1-164-004-11	CERAMIC CHIP 0.1μF 10%	25V
C719	1-104-913-11	TANTAL. CHIP 10μF 10%	16V
C722	1-164-004-11	CERAMIC CHIP 0.1μF 10%	25V
C725	1-164-004-11	CERAMIC CHIP 0.1μF 10%	25V
C726	1-164-004-11	CERAMIC CHIP 0.1μF 10%	25V
C727	1-104-913-11	TANTAL. CHIP 10μF 10%	16V
C732	1-164-004-11	CERAMIC CHIP 0.1μF 10%	25V
C737	1-164-004-11	CERAMIC CHIP 0.1μF 10%	25V
C738	1-164-004-11	CERAMIC CHIP 0.1μF 10%	25V
C745	1-164-004-11	CERAMIC CHIP 0.1μF 10%	25V
C751	1-164-004-11	CERAMIC CHIP 0.1μF 10%	25V
C752	1-104-913-11	TANTAL. CHIP 10μF 10%	16V
C755	1-104-913-11	TANTAL. CHIP 10μF 10%	16V
C756	1-164-004-11	CERAMIC CHIP 0.1μF 10%	25V
C758	1-164-004-11	CERAMIC CHIP 0.1μF 10%	25V
C759	1-164-004-11	CERAMIC CHIP 0.1μF 10%	25V
C760	1-164-004-11	CERAMIC CHIP 0.1μF 10%	25V
C781	1-164-222-11	CERAMIC CHIP 0.22μF	25V
C784	1-164-004-11	CERAMIC CHIP 0.1μF 10%	25V
C785	1-164-004-11	CERAMIC CHIP 0.1μF 10%	25V

Ref.No.	Part No.	Description	Remark
C787	1-164-004-11	CERAMIC CHIP 0.1µF 10% 25V	
C789	1-164-004-11	CERAMIC CHIP 0.1µF 10% 25V	
C791	1-164-004-11	CERAMIC CHIP 0.1µF 10% 25V	
C793	1-107-823-11	CERAMIC CHIP 0.47µF 10% 16V	
C796	1-164-004-11	CERAMIC CHIP 0.1µF 10% 25V	
	<CONNECTOR>		
CN260	* 1-760-388-11	CONNECTOR PIN (SMD) 9 PIN	
CN262	* 1-691-551-11	PIN, CONNECTOR (SMD) 8P	
CN263	1-569-516-11	PIN, CONNECTOR 18P	
	<DIODE>		
D12	8-719-914-43	DIODE DAN202K	
D16	8-719-914-43	DIODE DAN202K	
D22	8-719-914-43	DIODE DAN202K	
D24	8-719-914-43	DIODE DAN202K	
D121	8-719-800-76	DIODE 1SS226	
D501	8-719-801-78	DIODE 1SS184	
D511	8-719-801-78	DIODE 1SS184	
D512	8-719-422-12	DIODE MA8039	
D525	8-719-801-78	DIODE 1SS184	
D527	8-719-801-78	DIODE 1SS184	
D581	8-719-801-78	DIODE 1SS184	
D611	8-719-800-76	DIODE 1SS226	
D612	8-719-801-78	DIODE 1SS184	
D615	8-719-800-76	DIODE 1SS226	
D625	8-719-800-76	DIODE 1SS226	
D650	8-719-056-73	DIODE UDZ-TE-17-2.7B	
D651	8-719-800-76	DIODE 1SS226	
D652	8-719-800-76	DIODE 1SS226	
D667	8-719-977-28	DIODE DTZ10B	
D672	8-719-800-76	DIODE 1SS226	
D691	8-719-056-73	DIODE UDZ-TE-17-2.7B	
D710	8-719-801-78	DIODE 1SS184	
D726	8-719-109-93	DIODE RD6.2ESB2	
D737	8-719-800-76	DIODE 1SS226	
D738	8-719-104-34	DIODE 1S2836	
D751	8-719-056-73	DIODE UDZ-TE-17-2.7B	
D787	8-719-977-28	DIODE DTZ10B	
	<FILTER>		
FL11	1-233-512-21	FERRITE 37µH	
FL12	1-233-512-21	FERRITE 37µH	
FL21	1-233-512-21	FERRITE 37µH	
FL101	1-233-512-21	FERRITE 37µH	
FL102	1-233-512-21	FERRITE 37µH	
FL103	1-233-512-21	FERRITE 37µH	
FL104	1-233-512-21	FERRITE 37µH	
FL111	1-233-283-11	FILTER, EMI (SMD)	
FL112	1-233-283-11	FILTER, EMI (SMD)	
FL113	1-233-283-11	FILTER, EMI (SMD)	
FL114	1-233-283-11	FILTER, EMI (SMD)	
	<IC>		
IC12	8-759-460-81	IC BA12FP-E2	
IC16	8-759-460-74	IC BA05FP-E2	
IC22	8-759-549-53	IC LM2990SX-12	
IC24	8-759-045-17	IC NJM79L05UA	
IC101	8-759-541-88	IC EPM7064STC44-10-PULSE	
IC102	8-759-564-62	IC MAX4224ESA-TG06	
IC141	8-759-381-53	IC UPC814G2-E2	
IC171	8-759-392-64	IC AD828AR	
IC560	8-759-710-78	IC NJM082BM-T1	
IC570	8-759-082-61	IC TC4W53FU	
IC595	8-759-542-11	IC MAX4223ESA-TG06	
IC661	8-759-381-53	IC UPC814G2-E2	
IC781	8-759-381-53	IC UPC814G2-E2	
	<JACK>		
J260	1-568-547-11	JACK, MINIATUER PIN	
	<COIL>		
L648	1-412-066-21	INDUCTOR CHIP 220µH	
	<TRANSISTOR>		
Q121	8-729-033-16	TRANSISTOR 2SA1669-TB	
Q133	8-729-112-65	TRANSISTOR 2SA1462-T1Y33	
Q141	8-729-116-05	TRANSISTOR 2SK160-K5	
Q441	8-729-107-31	TRANSISTOR 2SC3545-T43	
Q446	8-729-107-31	TRANSISTOR 2SC3545-T43	
Q447	8-729-216-22	TRANSISTOR 2SA1162-G	
Q451	8-729-107-31	TRANSISTOR 2SC3545-T43	
Q456	8-729-107-31	TRANSISTOR 2SC3545-T43	
Q457	8-729-216-22	TRANSISTOR 2SA1162-G	
Q501	8-729-033-16	TRANSISTOR 2SA1669-TB	
Q502	8-729-112-65	TRANSISTOR 2SA1462-T1Y33	
Q510	8-729-129-54	TRANSISTOR 2SC2954	
Q511	8-729-129-54	TRANSISTOR 2SC2954	
Q525	8-729-107-31	TRANSISTOR 2SC3545-T43	
Q527	8-729-230-49	TRANSISTOR 2SC2712-YG	
Q540	8-729-216-22	TRANSISTOR 2SA1162-G	
Q551	8-729-129-54	TRANSISTOR 2SC2954	
Q563	8-729-230-49	TRANSISTOR 2SC2712-YG	
Q581	8-729-112-65	TRANSISTOR 2SA1462-T1Y33	
Q605	8-729-107-31	TRANSISTOR 2SC3545-T43	
Q610	8-729-033-16	TRANSISTOR 2SA1669-TB	
Q618	8-729-112-65	TRANSISTOR 2SA1462-T1Y33	
Q625	8-729-143-46	TRANSISTOR 2SC3356-R24	
Q631	8-729-143-46	TRANSISTOR 2SC3356-R24	
Q645	8-729-033-16	TRANSISTOR 2SA1669-TB	
Q647	8-729-107-31	TRANSISTOR 2SC3545-T43	
Q651	8-729-143-46	TRANSISTOR 2SC3356-R24	
Q656	8-729-129-54	TRANSISTOR 2SC2954	
Q665	8-729-116-05	TRANSISTOR 2SK160-K5	
Q671	8-729-107-31	TRANSISTOR 2SC3545-T43	
Q691	8-729-143-46	TRANSISTOR 2SC3356-R24	
Q692	8-729-033-16	TRANSISTOR 2SA1669-TB	
Q701	8-729-129-54	TRANSISTOR 2SC2954	
Q721	8-729-143-46	TRANSISTOR 2SC3356-R24	
Q723	8-729-107-31	TRANSISTOR 2SC3545-T43	

CAG

Ref.No.	Part No.	Description			Remark
Q726	8-729-129-54	TRANSISTOR 2SC2954			
Q733	8-729-129-54	TRANSISTOR 2SC2954			
Q736	8-729-033-16	TRANSISTOR 2SA1669-TB			
Q738	8-729-112-65	TRANSISTOR 2SA1462-T1Y33			
Q741	8-729-112-65	TRANSISTOR 2SA1462-T1Y33			
Q751	8-729-143-46	TRANSISTOR 2SC3356-R24			
Q752	8-729-033-16	TRANSISTOR 2SA1669-TB			
Q781	8-729-116-05	TRANSISTOR 2SK160-K5			
Q797	8-729-230-49	TRANSISTOR 2SC2712-YG			
	<RESISTOR>				
R51	1-216-073-00	RES,CHIP	10K	5%	1/10W
R63	1-216-073-00	RES,CHIP	10K	5%	1/10W
R75	1-216-295-91	SHORT 0			
R76	1-216-295-91	SHORT 0			
R82	1-216-049-91	RES,CHIP	1K	5%	1/10W
R83	1-216-065-91	RES,CHIP	4.7K	5%	1/10W
R84	1-216-025-91	RES,CHIP	100	5%	1/10W
R85	1-216-025-91	RES,CHIP	100	5%	1/10W
R101	1-216-631-11	METAL CHIP	150	0.50%	1/10W
R102	1-216-631-11	METAL CHIP	150	0.50%	1/10W
R103	1-216-017-91	RES,CHIP	47	5%	1/10W
R105	1-216-642-11	METAL CHIP	430	0.50%	1/10W
R106	1-216-643-11	METAL CHIP	470	0.50%	1/10W
R121	1-216-017-91	RES,CHIP	47	5%	1/10W
R131	1-216-659-11	METAL CHIP	2.2K	0.50%	1/10W
R132	1-216-667-11	METAL CHIP	4.7K	0.50%	1/10W
R133	1-216-033-00	RES,CHIP	220	5%	1/10W
R135	1-216-647-11	METAL CHIP	680	0.50%	1/10W
R136	1-216-647-11	METAL CHIP	680	0.50%	1/10W
R140	1-216-049-91	RES,CHIP	1K	5%	1/10W
R141	1-216-121-91	RES,CHIP	1M	5%	1/10W
R142	1-216-025-91	RES,CHIP	100	5%	1/10W
R143	1-216-025-91	RES,CHIP	100	5%	1/10W
R145	1-216-677-11	METAL CHIP	12K	0.50%	1/10W
R146	1-216-683-11	METAL CHIP	22K	0.50%	1/10W
R147	1-216-295-91	SHORT 0			
R148	1-216-049-91	RES,CHIP	1K	5%	1/10W
R151	1-216-073-00	RES,CHIP	10K	5%	1/10W
R155	1-216-057-00	RES,CHIP	2.2K	5%	1/10W
R171	1-216-025-91	RES,CHIP	100	5%	1/10W
R172	1-216-049-91	RES,CHIP	1K	5%	1/10W
R173	1-216-051-00	RES,CHIP	1.2K	5%	1/10W
R174	1-216-025-91	RES,CHIP	100	5%	1/10W
R180	1-216-025-91	RES,CHIP	100	5%	1/10W
R182	1-216-049-91	RES,CHIP	1K	5%	1/10W
R183	1-216-049-91	RES,CHIP	1K	5%	1/10W
R184	1-216-025-91	RES,CHIP	100	5%	1/10W
R441	1-216-065-91	RES,CHIP	4.7K	5%	1/10W
R445	1-216-065-91	RES,CHIP	4.7K	5%	1/10W
R446	1-216-025-91	RES,CHIP	100	5%	1/10W
R447	1-216-001-00	RES,CHIP	10	5%	1/10W
R448	1-216-025-91	RES,CHIP	100	5%	1/10W
R451	1-216-065-91	RES,CHIP	4.7K	5%	1/10W
R455	1-216-065-91	RES,CHIP	4.7K	5%	1/10W
R456	1-216-025-91	RES,CHIP	100	5%	1/10W
R457	1-216-001-00	RES,CHIP	10	5%	1/10W
R458	1-216-025-91	RES,CHIP	100	5%	1/10W

Ref.No.	Part No.	Description			Remark
R501	1-216-033-00	RES,CHIP	220	5%	1/10W
R502	1-216-643-11	METAL CHIP	470	0.50%	1/10W
R503	1-216-033-00	RES,CHIP	220	5%	1/10W
R504	1-216-659-11	METAL CHIP	2.2K	0.50%	1/10W
R505	1-216-667-11	METAL CHIP	4.7K	0.50%	1/10W
R506	1-216-045-00	RES,CHIP	680	5%	1/10W
R507	1-216-045-00	RES,CHIP	680	5%	1/10W
R508	1-216-045-00	RES,CHIP	680	5%	1/10W
R509	1-216-045-00	RES,CHIP	680	5%	1/10W
R510	1-216-017-91	RES,CHIP	47	5%	1/10W
R511	1-216-033-00	RES,CHIP	220	5%	1/10W
R521	1-216-643-11	METAL CHIP	470	0.50%	1/10W
R523	1-216-057-00	RES,CHIP	2.2K	5%	1/10W
R524	1-216-065-91	RES,CHIP	4.7K	5%	1/10W
R525	1-216-081-00	RES,CHIP	22K	5%	1/10W
R526	1-216-057-00	RES,CHIP	2.2K	5%	1/10W
R527	1-216-073-00	RES,CHIP	10K	5%	1/10W
R540	1-216-033-00	RES,CHIP	220	5%	1/10W
R541	1-216-057-00	RES,CHIP	2.2K	5%	1/10W
R542	1-216-071-00	RES,CHIP	8.2K	5%	1/10W
R551	1-216-051-00	RES,CHIP	1.2K	5%	1/10W
R552	1-216-075-00	RES,CHIP	12K	5%	1/10W
R553	1-216-033-00	RES,CHIP	220	5%	1/10W
R554	1-220-273-11	RES,CHIP	1K	5%	1/2W
R560	1-216-049-91	RES,CHIP	1K	5%	1/10W
R561	1-216-675-11	METAL CHIP	10K	0.50%	1/10W
R562	1-216-675-11	METAL CHIP	10K	0.50%	1/10W
R563	1-216-033-00	RES,CHIP	220	5%	1/10W
R564	1-216-653-11	METAL CHIP	1.2K	0.50%	1/10W
R566	1-216-675-11	METAL CHIP	10K	0.50%	1/10W
R567	1-216-049-91	RES,CHIP	1K	5%	1/10W
R571	1-216-049-91	RES,CHIP	1K	5%	1/10W
R572	1-216-049-91	RES,CHIP	1K	5%	1/10W
R573	1-216-049-91	RES,CHIP	1K	5%	1/10W
R581	1-216-033-00	RES,CHIP	220	5%	1/10W
R591	1-216-017-91	RES,CHIP	47	5%	1/10W
R592	1-216-295-91	SHORT 0			
R593	1-216-295-91	SHORT 0			
R595	1-216-043-91	RES,CHIP	560	5%	1/10W
R596	1-216-295-91	SHORT 0			
R605	1-216-033-00	RES,CHIP	220	5%	1/10W
R606	1-216-687-11	METAL CHIP	33K	0.50%	1/10W
R607	1-216-017-91	RES,CHIP	47	5%	1/10W
R609	1-216-295-91	SHORT 0			
R610	1-216-017-91	RES,CHIP	47	5%	1/10W
R616	1-216-653-11	METAL CHIP	1.2K	0.50%	1/10W
R617	1-216-667-11	METAL CHIP	4.7K	0.50%	1/10W
R618	1-216-025-91	RES,CHIP	100	5%	1/10W
R619	1-216-631-11	METAL CHIP	150	0.50%	1/10W
R621	1-216-659-11	METAL CHIP	2.2K	0.50%	1/10W
R622	1-216-627-11	METAL CHIP	100	0.50%	1/10W
R625	1-216-033-00	RES,CHIP	220	5%	1/10W
R631	1-216-017-91	RES,CHIP	47	5%	1/10W
R632	1-216-627-11	METAL CHIP	100	0.50%	1/10W
R633	1-216-627-11	METAL CHIP	100	0.50%	1/10W
R635	1-216-641-11	METAL CHIP	390	0.50%	1/10W
R636	1-216-635-11	METAL CHIP	220	0.50%	1/10W
R645	1-216-001-00	RES,CHIP	10	5%	1/10W

Ref.No.	Part No.	Description			Remark
R646	1-216-073-00	RES,CHIP	10K	5%	1/10W
R647	1-216-033-00	RES,CHIP	220	5%	1/10W
R648	1-216-653-11	METAL CHIP	1.2K	0.50%	1/10W
R649	1-216-673-11	METAL CHIP	8.2K	0.50%	1/10W
R650	1-216-639-11	METAL CHIP	330	0.50%	1/10W
R651	1-216-017-91	RES,CHIP	47	5%	1/10W
R653	1-216-635-11	METAL CHIP	220	0.50%	1/10W
R654	1-216-627-11	METAL CHIP	100	0.50%	1/10W
R655	1-216-627-11	METAL CHIP	100	0.50%	1/10W
R656	1-216-635-11	METAL CHIP	220	0.50%	1/10W
R657	1-216-033-00	RES,CHIP	220	5%	1/10W
R658	1-216-667-11	METAL CHIP	4.7K	0.50%	1/10W
R659	1-216-653-11	METAL CHIP	1.2K	0.50%	1/10W
R661	1-216-049-91	RES,CHIP	1K	5%	1/10W
R665	1-216-121-91	RES,CHIP	1M	5%	1/10W
R666	1-216-049-91	RES,CHIP	1K	5%	1/10W
R667	1-216-073-00	RES,CHIP	10K	5%	1/10W
R668	1-216-049-91	RES,CHIP	1K	5%	1/10W
R669	1-216-081-00	RES,CHIP	22K	5%	1/10W
R672	1-216-025-91	RES,CHIP	100	5%	1/10W
R675	1-216-627-11	METAL CHIP	100	0.50%	1/10W
R676	1-216-001-00	RES,CHIP	10	5%	1/10W
R681	1-216-677-11	METAL CHIP	12K	0.50%	1/10W
R683	1-216-669-11	METAL CHIP	5.6K	0.50%	1/10W
R691	1-216-017-91	RES,CHIP	47	5%	1/10W
R692	1-216-017-91	RES,CHIP	47	5%	1/10W
R693	1-216-001-00	RES,CHIP	10	5%	1/10W
R695	1-216-001-00	RES,CHIP	10	5%	1/10W
R696	1-216-001-00	RES,CHIP	10	5%	1/10W
R698	1-220-273-11	RES,CHIP	1K	5%	1/2W
R699	1-220-273-11	RES,CHIP	1K	5%	1/2W
R701	1-216-017-91	RES,CHIP	47	5%	1/10W
R704	1-216-635-11	METAL CHIP	220	0.50%	1/10W
R710	1-216-065-91	RES,CHIP	4.7K	5%	1/10W
R711	1-216-637-11	METAL CHIP	270	0.50%	1/10W
R712	1-216-635-11	METAL CHIP	220	0.50%	1/10W
R717	1-216-627-11	METAL CHIP	100	0.50%	1/10W
R719	1-216-643-11	METAL CHIP	470	0.50%	1/10W
R720	1-216-635-11	METAL CHIP	220	0.50%	1/10W
R721	1-216-017-91	RES,CHIP	47	5%	1/10W
R722	1-216-057-00	RES,CHIP	2.2K	5%	1/10W
R723	1-216-025-91	RES,CHIP	100	5%	1/10W
R724	1-216-667-11	METAL CHIP	4.7K	0.50%	1/10W
R725	1-216-657-11	METAL CHIP	1.8K	0.50%	1/10W
R726	1-216-017-91	RES,CHIP	47	5%	1/10W
R727	1-216-017-91	RES,CHIP	47	5%	1/10W
R731	1-216-667-11	METAL CHIP	4.7K	0.50%	1/10W
R732	1-216-669-11	METAL CHIP	5.6K	0.50%	1/10W
R733	1-216-025-91	RES,CHIP	100	5%	1/10W
R734	1-220-269-11	RES,CHIP	330	5%	1/2W
R735	1-220-274-11	RES,CHIP	1.2K	5%	1/2W
R736	1-216-017-91	RES,CHIP	47	5%	1/10W
R737	1-220-274-11	RES,CHIP	1.2K	5%	1/2W
R738	1-216-033-00	RES,CHIP	220	5%	1/10W
R739	1-216-653-11	METAL CHIP	1.2K	0.50%	1/10W
R740	1-216-667-11	METAL CHIP	4.7K	0.50%	1/10W
R741	1-216-033-00	RES,CHIP	220	5%	1/10W
R742	1-216-659-11	METAL CHIP	2.2K	0.50%	1/10W
R743	1-216-651-11	METAL CHIP	1K	0.50%	1/10W
R745	1-216-659-11	METAL CHIP	2.2K	0.50%	1/10W
R746	1-216-669-11	METAL CHIP	5.6K	0.50%	1/10W
R751	1-216-017-91	RES,CHIP	47	5%	1/10W
R752	1-216-017-91	RES,CHIP	47	5%	1/10W
R753	1-216-001-00	RES,CHIP	10	5%	1/10W
R754	1-216-635-11	METAL CHIP	220	0.50%	1/10W
R755	1-216-635-11	METAL CHIP	220	0.50%	1/10W
R756	1-216-001-00	RES,CHIP	10	5%	1/10W
R757	1-216-001-00	RES,CHIP	10	5%	1/10W
R758	1-220-273-11	RES,CHIP	1K	5%	1/2W
R759	1-220-273-11	RES,CHIP	1K	5%	1/2W
R781	1-216-049-91	RES,CHIP	1K	5%	1/10W
R782	1-216-121-91	RES,CHIP	1M	5%	1/10W
R783	1-216-049-91	RES,CHIP	1K	5%	1/10W
R784	1-216-677-11	METAL CHIP	12K	0.50%	1/10W
R785	1-216-659-11	METAL CHIP	2.2K	0.50%	1/10W
R786	1-216-651-11	METAL CHIP	1K	0.50%	1/10W
R787	1-216-049-91	RES,CHIP	1K	5%	1/10W
R789	1-216-049-91	RES,CHIP	1K	5%	1/10W
R791	1-216-073-00	RES,CHIP	10K	5%	1/10W
R795	1-216-675-11	METAL CHIP	10K	0.50%	1/10W
R796	1-216-675-11	METAL CHIP	10K	0.50%	1/10W
R797	1-216-025-91	RES,CHIP	100	5%	1/10W
R798	1-216-057-00	RES,CHIP	2.2K	5%	1/10W

<RESISTOR BLOCK>

RB51	1-233-576-11	RES, CHIP	NETWORK 100
RB71	1-233-414-11	RES, CHIP	NETWORK 4.7K (3216)
RB72	1-233-576-11	RES, CHIP	NETWORK 100
RB81	1-233-576-11	RES, CHIP	NETWORK 100

<VARIABLE RESISTOR>

RV145	1-230-871-11	RES, ADJ, METAL GLAZE	22K
RV622	1-238-785-21	RES, ADJ, CERMET	2K
RV623	1-238-783-11	RES, ADJ, CERMET	500
RV682	1-238-786-11	RES, ADJ, CERMET	5K
RV718	1-238-785-21	RES, ADJ, CERMET	2K
RV785	1-238-786-11	RES, ADJ, CERMET	5K
RV796	1-230-871-11	RES, ADJ, METAL GLAZE	22K

<TEST PIN>

TP21	1-535-757-11	CHIP, CHECKER
TP22	1-535-757-11	CHIP, CHECKER
TP23	1-535-757-11	CHIP, CHECKER
TP24	1-535-757-11	CHIP, CHECKER
TP34	1-535-757-11	CHIP, CHECKER
TP35	1-535-757-11	CHIP, CHECKER
TP71	1-535-757-11	CHIP, CHECKER
TP72	1-535-757-11	CHIP, CHECKER
TP73	1-535-757-11	CHIP, CHECKER
TP501	1-535-757-11	CHIP, CHECKER
TP511	1-535-757-11	CHIP, CHECKER
TP691	1-535-757-11	CHIP, CHECKER
TP751	1-535-757-11	CHIP, CHECKER

CDG

Ref.No.	Part No.	Description			Remark
**********					
		CDG MOUNTED PC BOARD			
		**********			
	<CAPACITOR>				
C800	1-128-304-11	ELECT CHIP	330µF	20%	16V
C801	1-164-004-11	CERAMIC CHIP	0.1µF	10%	25V
C802	1-104-913-11	TANTAL. CHIP	10µF	10%	16V
C803	1-104-913-11	TANTAL. CHIP	10µF	10%	16V
C805	1-164-004-11	CERAMIC CHIP	0.1µF	10%	25V
C811	1-124-779-00	ELECT CHIP	10µF	20%	16V
C812	1-164-004-11	CERAMIC CHIP	0.1µF	10%	25V
C815	1-163-251-11	CERAMIC CHIP	100PF	5%	50V
C816	1-163-227-11	CERAMIC CHIP	10PF	0.5PF	50V
C817	1-163-121-00	CERAMIC CHIP	150PF	5%	50V
C818	1-162-117-00	CERAMIC	100PF	10%	500V
C820	1-107-961-91	ELECT	10µF	20%	250V
C821	1-102-050-00	CERAMIC	0.01µF	99%	500V
C822	1-107-943-11	ELECT	10µF	20%	160V
C823	1-164-004-11	CERAMIC CHIP	0.1µF	10%	25V
C824	1-164-004-11	CERAMIC CHIP	0.1µF	10%	25V
C826	1-126-397-11	ELECT CHIP	33µF	20%	25V
C827	1-164-004-11	CERAMIC CHIP	0.1µF	10%	25V
C828	1-164-506-11	CERAMIC CHIP	4.7µF		16V
C829	1-164-506-11	CERAMIC CHIP	4.7µF		16V
C830	1-164-004-11	CERAMIC CHIP	0.1µF	10%	25V
C832	1-164-004-11	CERAMIC CHIP	0.1µF	10%	25V
C833	1-102-050-00	CERAMIC	0.01µF	99%	500V
C834	1-107-961-91	ELECT	10µF	20%	250V
C851	1-110-648-11	ELECT CHIP	220µF	20%	25V
C852	1-128-304-11	ELECT CHIP	330µF	20%	16V
C853	1-164-004-11	CERAMIC CHIP	0.1µF	10%	25V
C854	1-104-913-11	TANTAL. CHIP	10µF	10%	16V
C862	1-128-304-11	ELECT CHIP	330µF	20%	16V
C901	1-164-004-11	CERAMIC CHIP	0.1µF	10%	25V
C902	1-164-004-11	CERAMIC CHIP	0.1µF	10%	25V
C903	1-164-004-11	CERAMIC CHIP	0.1µF	10%	25V
C904	1-104-913-11	TANTAL. CHIP	10µF	10%	16V
C905	1-164-004-11	CERAMIC CHIP	0.1µF	10%	25V
C906	1-104-913-11	TANTAL. CHIP	10µF	10%	16V
C911	1-124-779-00	ELECT CHIP	10µF	20%	16V
C912	1-164-004-11	CERAMIC CHIP	0.1µF	10%	25V
C913	1-163-249-11	CERAMIC CHIP	82PF	5%	50V
C914	1-163-235-11	CERAMIC CHIP	22PF	5%	50V
C915	1-163-243-11	CERAMIC CHIP	47PF	5%	50V
C953	1-164-004-11	CERAMIC CHIP	0.1µF	10%	25V
C954	1-104-913-11	TANTAL. CHIP	10µF	10%	16V
C956	1-162-117-00	CERAMIC	100PF	10%	500V
C957	1-102-050-00	CERAMIC	0.01µF	99%	500V
C958	1-107-943-11	ELECT	10µF	20%	160V
C961	1-102-038-00	CERAMIC	0.001µF		500V
C962	1-163-275-11	CERAMIC CHIP	0.001µF	5%	50V
C965	1-164-004-11	CERAMIC CHIP	0.1µF	10%	25V
C968	1-164-004-11	CERAMIC CHIP	0.1µF	10%	25V
C969	1-164-004-11	CERAMIC CHIP	0.1µF	10%	25V
C970	1-164-004-11	CERAMIC CHIP	0.1µF	10%	25V
C971	1-124-779-00	ELECT CHIP	10µF	20%	16V
C973	1-164-004-11	CERAMIC CHIP	0.1µF	10%	25V
C974	1-164-004-11	CERAMIC CHIP	0.1µF	10%	25V
C977	1-164-004-11	CERAMIC CHIP	0.1µF	10%	25V
C982	1-163-251-11	CERAMIC CHIP	100PF	5%	50V
C991	1-164-004-11	CERAMIC CHIP	0.1µF	10%	25V
C992	1-164-004-11	CERAMIC CHIP	0.1µF	10%	25V
C993	1-164-004-11	CERAMIC CHIP	0.1µF	10%	25V
C995	1-163-251-11	CERAMIC CHIP	100PF	5%	50V
C996	1-164-004-11	CERAMIC CHIP	0.1µF	10%	25V
C997	1-164-004-11	CERAMIC CHIP	0.1µF	10%	25V
C998	1-164-506-11	CERAMIC CHIP	4.7µF		16V
C999	1-164-506-11	CERAMIC CHIP	4.7µF		16V
C1000	1-164-004-11	CERAMIC CHIP	0.1µF	10%	25V
C1002	1-164-004-11	CERAMIC CHIP	0.1µF	10%	25V
C1201	1-107-943-11	ELECT	10µF	20%	160V
C1210	1-107-943-11	ELECT	10µF	20%	160V
C1211	1-107-823-11	CERAMIC CHIP	0.47µF	10%	16V
C1212	1-164-004-11	CERAMIC CHIP	0.1µF	10%	25V
C1213	1-164-004-11	CERAMIC CHIP	0.1µF	10%	25V
C1214	1-164-004-11	CERAMIC CHIP	0.1µF	10%	25V
C1215	1-164-004-11	CERAMIC CHIP	0.1µF	10%	25V
C1221	1-107-943-11	ELECT	10µF	20%	160V
	<CONNECTOR>				
CN264	* 1-564-726-11	PIN, CONNECTOR (SMALL TYPE)10P			
CN265	* 1-564-507-11	PLUG, CONNECTOR 4P			
CN266	* 1-564-507-11	PLUG, CONNECTOR 4P			
CN269	* 1-564-518-11	PLUG, CONNECTOR 3P			
CN270	* 1-785-522-11	PIN, CONNECTOR (PC BOARD) 18P			
	<DIODE>				
D801	8-719-800-76	DIODE 1SS226			
D806	8-719-978-04	DIODE DTZ-TT11-3.3B			
D811	8-719-901-83	DIODE 1SS83			
D812	8-719-901-83	DIODE 1SS83			
D820	8-719-800-76	DIODE 1SS226			
D821	8-719-106-53	DIODE RD10M-B2			
D831	8-719-107-24	DIODE RD20M-B2			
D832	8-719-901-83	DIODE 1SS83			
D833	8-719-901-83	DIODE 1SS83			
D841	8-719-901-83	DIODE 1SS83			
D842	8-719-901-83	DIODE 1SS83			
D851	8-719-914-43	DIODE DAN202K			
D861	8-719-914-43	DIODE DAN202K			
D901	8-719-800-76	DIODE 1SS226			
D906	8-719-978-04	DIODE DTZ-TT11-3.3B			
D941	8-719-901-83	DIODE 1SS83			
D942	8-719-901-83	DIODE 1SS83			
D945	8-719-018-98	DIODE 1SS311(TE85L)			
D955	8-719-800-76	DIODE 1SS226			
D956	8-719-106-53	DIODE RD10M-B2			
D960	8-719-801-78	DIODE 1SS184			
D961	8-719-800-76	DIODE 1SS226			
D965	8-719-105-82	DIODE RD5.1M-B2			
D981	8-719-106-53	DIODE RD10M-B2			
D982	8-719-800-76	DIODE 1SS226			
D1001	8-719-976-96	DIODE DTZ4.7C			

Ref.No.	Part No.	Description	Remark
D1211	8-719-800-76	DIODE 1SS226	
D1215	8-719-106-53	DIODE RD10M-B2	
	<FILTER>		
FL1001	1-233-831-11	FILTER, EMI	
FL1002	1-233-831-11	FILTER, EMI	
FL1011	1-233-512-21	FERRITE 37μH	
FL1012	1-233-512-21	FERRITE 37μH	
FL1013	1-233-512-21	FERRITE 37μH	
FL1014	1-233-512-21	FERRITE 37μH	
	<IC>		
IC801	8-749-014-86	IC VPJ15H	
IC802	8-759-710-78	IC NJM082BM-T1	
IC851	8-759-460-81	IC BA12FP-E2	
IC861	8-759-335-28	IC TA78M09F(TE16L)	
IC901	8-749-014-86	IC VPJ15H	
IC902	8-759-381-53	IC UPC814G2-E2	
IC961	8-749-011-45	IC NJL5152MD	
IC971	8-759-710-78	IC NJM082BM-T1	
IC981	8-759-234-77	IC TC4S66F	
IC990	8-759-710-78	IC NJM082BM-T1	
IC998	8-759-710-78	IC NJM082BM-T1	
IC1211	8-759-198-34	IC TA75S558F	
	<COIL>		
L801	1-412-533-21	INDUCTOR 47μH	
L818	1-414-137-31	INDUCTOR 0.22μH	
L951	1-412-533-21	INDUCTOR 47μH	
L954	1-414-137-31	INDUCTOR 0.22μH	
L955	1-414-137-31	INDUCTOR 0.22μH	
L956	1-414-137-31	INDUCTOR 0.22μH	
L957	1-414-137-31	INDUCTOR 0.22μH	
	<TRANSISTOR>		
Q801	8-729-033-16	TRANSISTOR 2SA1669-TB	
Q802	8-729-112-65	TRANSISTOR 2SA1462-T1Y33	
Q806	8-729-145-13	TRANSISTOR 2SC3356-(R25)	
Q807	8-729-033-16	TRANSISTOR 2SA1669-TB	
Q815	8-729-116-05	TRANSISTOR 2SK160-K5	
Q819	8-729-801-88	TRANSISTOR 2SA1381-E	
Q821	8-729-821-02	TRANSISTOR 2SC3503-DE	
Q901	8-729-033-16	TRANSISTOR 2SA1669-TB	
Q902	8-729-112-65	TRANSISTOR 2SA1462-T1Y33	
Q906	8-729-145-13	TRANSISTOR 2SC3356-(R25)	
Q907	8-729-033-16	TRANSISTOR 2SA1669-TB	
Q948	8-729-804-63	TRANSISTOR 2SA1406-E	
Q961	1-801-806-11	TRANSISTOR DTC144EKA-T146	
Q974	8-729-230-49	TRANSISTOR 2SC2712-YG	
Q1204	8-729-821-02	TRANSISTOR 2SC3503-DE	
Q1210	8-729-111-07	TRANSISTOR 2SD1590-L	

Ref.No.	Part No.	Description			Remark
	<RESISTOR>				
R801	1-216-017-91	RES,CHIP	47	5%	1/10W
R802	1-216-033-00	RES,CHIP	220	5%	1/10W
R803	1-216-025-91	RES,CHIP	100	5%	1/10W
R804	1-216-653-11	METAL CHIP	1.2K	0.50%	1/10W
R805	1-216-667-11	METAL CHIP	4.7K	0.50%	1/10W
R806	1-216-017-91	RES,CHIP	47	5%	1/10W
R807	1-216-017-91	RES,CHIP	47	5%	1/10W
R808	1-216-001-00	RES,CHIP	10	5%	1/10W
R809	1-216-001-00	RES,CHIP	10	5%	1/10W
R810	1-216-001-00	RES,CHIP	10	5%	1/10W
R811	1-216-627-11	METAL CHIP	100	0.50%	1/10W
R814	1-216-619-11	METAL CHIP	47	0.50%	1/10W
R815	1-249-401-11	CARBON	47	5%	1/4W F
R819	1-216-033-00	RES,CHIP	220	5%	1/10W
R820	1-216-049-91	RES,CHIP	1K	5%	1/10W
R821	1-215-485-00	METAL	470K	1%	1/4W
R822	1-215-485-00	METAL	470K	1%	1/4W
R823	1-215-461-00	METAL	47K	1%	1/4W
R824	1-216-121-91	RES,CHIP	1M	5%	1/10W
R825	1-216-025-91	RES,CHIP	100	5%	1/10W
R826	1-216-075-00	RES,CHIP	12K	5%	1/10W
R827	1-216-667-11	METAL CHIP	4.7K	0.50%	1/10W
R828	1-216-675-11	METAL CHIP	10K	0.50%	1/10W
R829	1-216-057-00	RES,CHIP	2.2K	5%	1/10W
R830	1-216-667-11	METAL CHIP	4.7K	0.50%	1/10W
R831	1-215-461-00	METAL	47K	1%	1/4W
R832	1-249-417-11	CARBON	1K	5%	1/4W
R833	1-249-417-11	CARBON	1K	5%	1/4W
R841	1-215-477-00	METAL	220K	1%	1/4W
R851	1-220-274-11	RES,CHIP	1.2K	5%	1/2W
R852	1-220-274-11	RES,CHIP	1.2K	5%	1/2W
R901	1-216-017-91	RES,CHIP	47	5%	1/10W
R902	1-216-033-00	RES,CHIP	220	5%	1/10W
R903	1-216-025-91	RES,CHIP	100	5%	1/10W
R904	1-216-653-11	METAL CHIP	1.2K	0.50%	1/10W
R905	1-216-667-11	METAL CHIP	4.7K	0.50%	1/10W
R906	1-216-017-91	RES,CHIP	47	5%	1/10W
R907	1-216-017-91	RES,CHIP	47	5%	1/10W
R908	1-216-001-00	RES,CHIP	10	5%	1/10W
R909	1-216-001-00	RES,CHIP	10	5%	1/10W
R910	1-216-001-00	RES,CHIP	10	5%	1/10W
R911	1-216-627-11	METAL CHIP	100	0.50%	1/10W
R912	1-216-619-11	METAL CHIP	47	0.50%	1/10W
R919	1-216-033-00	RES,CHIP	220	5%	1/10W
R921	1-215-485-00	METAL	470K	1%	1/4W
R922	1-215-485-00	METAL	470K	1%	1/4W
R923	1-215-445-00	METAL	10K	1%	1/4W
R924	1-216-049-91	RES,CHIP	1K	5%	1/10W
R925	1-216-025-91	RES,CHIP	100	5%	1/10W
R951	1-220-274-11	RES,CHIP	1.2K	5%	1/2W
R952	1-220-274-11	RES,CHIP	1.2K	5%	1/2W
R955	1-249-401-11	CARBON	47	5%	1/4W F
R957	1-215-493-00	METAL	1M	1%	1/4W
R958	1-219-741-91	CARBON	10	5%	1/2W
R959	1-219-743-11	CARBON	100	5%	1/2W
R960	1-216-649-11	METAL CHIP	820	0.50%	1/10W
R961	1-216-683-11	METAL CHIP	22K	0.50%	1/10W

Ref.No.	Part No.	Description			Remark
R967	1-216-025-91	RES,CHIP	100	5%	1/10W
R971	1-216-025-91	RES,CHIP	100	5%	1/10W
R972	1-216-653-11	METAL CHIP	1.2K	0.50%	1/10W
R973	1-216-653-11	METAL CHIP	1.2K	0.50%	1/10W
R974	1-216-073-00	RES,CHIP	10K	5%	1/10W
R975	1-216-045-00	RES,CHIP	680	5%	1/10W
R976	1-216-675-11	METAL CHIP	10K	0.50%	1/10W
R977	1-216-073-00	RES,CHIP	10K	5%	1/10W
R978	1-216-025-91	RES,CHIP	100	5%	1/10W
R979	1-216-025-91	RES,CHIP	100	5%	1/10W
R982	1-216-065-91	RES,CHIP	4.7K	5%	1/10W
R983	1-216-089-91	RES,CHIP	47K	5%	1/10W
R984	1-216-017-91	RES,CHIP	47	5%	1/10W
R990	1-216-025-91	RES,CHIP	100	5%	1/10W
R991	1-216-673-11	METAL CHIP	8.2K	0.50%	1/10W
R992	1-216-673-11	METAL CHIP	8.2K	0.50%	1/10W
R993	1-216-049-91	RES,CHIP	1K	5%	1/10W
R994	1-216-025-91	RES,CHIP	100	5%	1/10W
R995	1-216-025-91	RES,CHIP	100	5%	1/10W
R996	1-216-675-11	METAL CHIP	10K	0.50%	1/10W
R997	1-216-659-11	METAL CHIP	2.2K	0.50%	1/10W
R998	1-216-105-91	RES,CHIP	220K	5%	1/10W
R999	1-216-049-91	RES,CHIP	1K	5%	1/10W
R1001	1-216-057-00	RES,CHIP	2.2K	5%	1/10W
R1007	1-216-619-11	METAL CHIP	47	0.50%	1/10W
R1201	1-215-439-00	METAL	5.6K	1%	1/4W
R1202	1-215-455-00	METAL	27K	1%	1/4W
R1203	1-216-667-11	METAL CHIP	4.7K	0.50%	1/10W
R1204	1-216-025-91	RES,CHIP	100	5%	1/10W
R1211	1-216-049-91	RES,CHIP	1K	5%	1/10W
R1212	1-216-073-00	RES,CHIP	10K	5%	1/10W
R1213	1-216-675-11	METAL CHIP	10K	0.50%	1/10W
R1214	1-216-675-11	METAL CHIP	10K	0.50%	1/10W
R1221	1-215-477-00	METAL	220K	1%	1/4W
R1222	1-215-485-00	METAL	470K	1%	1/4W
R1223	1-216-699-11	METAL CHIP	100K	0.50%	1/10W
R1224	1-216-683-11	METAL CHIP	22K	0.50%	1/10W

<VARIABLE RESISTOR>

⊠RV965 ⚠		RES, ADJ, CERMET 2K
RV1223	1-238-804-11	RES, ADJ, CERMET 50K

<SWITCH>

S796	1-571-674-11	SWITCH, SLIDE

****

* A-1335-107-A CB COMPLETE PC BOARD
(Include CAB, CDB Mounted PC BOARD)
****

	3-701-809-31	SCREW, TERMINAL (M3X8)
	4-057-640-01	COVER, VOLUME
*	4-067-812-01	HOLDER (C), TR
*	4-067-820-01	HOLDER (VP)
*	7-322-065-72	RUBBER, RTV (SE-9168) (130G)
	7-682-652-09	SCREW +PS 3X16
	7-682-949-01	SCREW +PSW 3X10

****

CAB MOUNTED PC BOARD
****

<CAPACITOR>

Ref.No.	Part No.	Description			Remark
C11	1-110-648-11	ELECT CHIP	220μF	20%	25V
C12	1-128-304-11	ELECT CHIP	330μF	20%	16V
C15	1-128-361-11	ELECT CHIP	470μF	20%	10V
C16	1-128-361-11	ELECT CHIP	470μF	20%	10V
C21	1-110-648-11	ELECT CHIP	220μF	20%	25V
C22	1-128-304-11	ELECT CHIP	330μF	20%	16V
C24	1-128-361-11	ELECT CHIP	470μF	20%	10V
C51	1-164-004-11	CERAMIC CHIP	0.1μF	10%	25V
C61	1-164-004-11	CERAMIC CHIP	0.1μF	10%	25V
C71	1-164-004-11	CERAMIC CHIP	0.1μF	10%	25V
C81	1-164-004-11	CERAMIC CHIP	0.1μF	10%	25V
C105	1-164-004-11	CERAMIC CHIP	0.1μF	10%	25V
C106	1-104-913-11	TANTAL. CHIP	10μF	10%	16V
C107	1-164-004-11	CERAMIC CHIP	0.1μF	10%	25V
C108	1-104-913-11	TANTAL. CHIP	10μF	10%	16V
C111	1-126-392-11	ELECT CHIP	100μF	20%	6.3V
C132	1-164-004-11	CERAMIC CHIP	0.1μF	10%	25V
C135	1-164-004-11	CERAMIC CHIP	0.1μF	10%	25V
C136	1-126-394-11	ELECT CHIP	10μF	20%	16V
C141	1-163-021-91	CERAMIC CHIP	0.01μF	10%	50V
C142	1-163-009-11	CERAMIC CHIP	0.001μF	10%	50V
C146	1-164-004-11	CERAMIC CHIP	0.1μF	10%	25V
C151	1-163-017-00	CERAMIC CHIP	0.0047μF	10%	50V
C152	1-163-017-00	CERAMIC CHIP	0.0047μF	10%	50V
C153	1-164-004-11	CERAMIC CHIP	0.1μF	10%	25V
C154	1-164-004-11	CERAMIC CHIP	0.1μF	10%	25V
C171	1-164-004-11	CERAMIC CHIP	0.1μF	10%	25V
C172	1-135-177-21	TANTAL. CHIP	1μF	20%	16V
C173	1-164-004-11	CERAMIC CHIP	0.1μF	10%	25V
C174	1-135-177-21	TANTAL. CHIP	1μF	20%	16V
C441	1-163-001-11	CERAMIC CHIP	220PF	10%	50V
C444	1-135-177-21	TANTAL. CHIP	1μF	20%	16V
C445	1-164-004-11	CERAMIC CHIP	0.1μF	10%	25V
C446	1-163-001-11	CERAMIC CHIP	220PF	10%	50V
C451	1-163-001-11	CERAMIC CHIP	220PF	10%	50V
C454	1-135-177-21	TANTAL. CHIP	1μF	20%	16V
C455	1-164-004-11	CERAMIC CHIP	0.1μF	10%	25V
C456	1-163-001-11	CERAMIC CHIP	220PF	10%	50V
C502	1-104-607-11	ELECT CHIP	47μF	20%	16V
C503	1-164-004-11	CERAMIC CHIP	0.1μF	10%	25V
C505	1-164-004-11	CERAMIC CHIP	0.1μF	10%	25V
C506	1-164-004-11	CERAMIC CHIP	0.1μF	10%	25V
C511	1-104-913-11	TANTAL. CHIP	10μF	10%	16V
C512	1-164-004-11	CERAMIC CHIP	0.1μF	10%	25V
C513	1-164-004-11	CERAMIC CHIP	0.1μF	10%	25V
C514	1-164-004-11	CERAMIC CHIP	0.1μF	10%	25V
C515	1-104-913-11	TANTAL. CHIP	10μF	10%	16V
C516	1-104-913-11	TANTAL. CHIP	10μF	10%	16V

Ref.No.	Part No.	Description	Remark
C525	1-126-394-11	ELECT CHIP 10μF 20%	16V
C526	1-164-004-11	CERAMIC CHIP 0.1μF 10%	25V
C527	1-164-004-11	CERAMIC CHIP 0.1μF 10%	25V
C540	1-164-004-11	CERAMIC CHIP 0.1μF 10%	25V
C551	1-164-004-11	CERAMIC CHIP 0.1μF 10%	25V
C552	1-164-004-11	CERAMIC CHIP 0.1μF 10%	25V
C560	1-164-004-11	CERAMIC CHIP 0.1μF 10%	25V
C561	1-164-004-11	CERAMIC CHIP 0.1μF 10%	25V
C562	1-164-004-11	CERAMIC CHIP 0.1μF 10%	25V
C571	1-164-004-11	CERAMIC CHIP 0.1μF 10%	25V
C572	1-164-004-11	CERAMIC CHIP 0.1μF 10%	25V
C573	1-164-004-11	CERAMIC CHIP 0.1μF 10%	25V
C591	1-164-004-11	CERAMIC CHIP 0.1μF 10%	25V
C592	1-104-913-11	TANTAL. CHIP 10μF 10%	16V
C593	1-164-004-11	CERAMIC CHIP 0.1μF 10%	25V
C594	1-104-913-11	TANTAL. CHIP 10μF 10%	16V
C606	1-164-004-11	CERAMIC CHIP 0.1μF 10%	25V
C610	1-104-607-11	ELECT CHIP 47μF 20%	16V
C611	1-164-004-11	CERAMIC CHIP 0.1μF 10%	25V
C612	1-164-004-11	CERAMIC CHIP 0.1μF 10%	25V
C617	1-164-004-11	CERAMIC CHIP 0.1μF 10%	25V
C621	1-104-913-11	TANTAL. CHIP 10μF 10%	16V
C622	1-164-004-11	CERAMIC CHIP 0.1μF 10%	25V
C631	1-126-767-11	ELECT 1000μF 20%	16V
C632	1-164-004-11	CERAMIC CHIP 0.1μF 10%	25V
C636	1-163-089-00	CERAMIC CHIP 6PF 0.5PF	50V
C638	1-164-004-11	CERAMIC CHIP 0.1μF 10%	25V
C639	1-104-913-11	TANTAL. CHIP 10μF 10%	16V
C646	1-164-004-11	CERAMIC CHIP 0.1μF 10%	25V
C647	1-164-004-11	CERAMIC CHIP 0.1μF 10%	25V
C648	1-104-607-11	ELECT CHIP 47μF 20%	16V
C649	1-104-913-11	TANTAL. CHIP 10μF 10%	16V
C651	1-164-004-11	CERAMIC CHIP 0.1μF 10%	25V
C652	1-104-913-11	TANTAL. CHIP 10μF 10%	16V
C655	1-104-607-11	ELECT CHIP 47μF 20%	16V
C656	1-164-004-11	CERAMIC CHIP 0.1μF 10%	25V
C658	1-164-004-11	CERAMIC CHIP 0.1μF 10%	25V
C665	1-164-222-11	CERAMIC CHIP 0.22μF	25V
C667	1-164-004-11	CERAMIC CHIP 0.1μF 10%	25V
C669	1-107-823-11	CERAMIC CHIP 0.47μF 10%	16V
C671	1-164-004-11	CERAMIC CHIP 0.1μF 10%	25V
C672	1-164-004-11	CERAMIC CHIP 0.1μF 10%	25V
C681	1-164-004-11	CERAMIC CHIP 0.1μF 10%	25V
C683	1-164-004-11	CERAMIC CHIP 0.1μF 10%	25V
C691	1-104-913-11	TANTAL. CHIP 10μF 10%	16V
C692	1-164-004-11	CERAMIC CHIP 0.1μF 10%	25V
C698	1-104-913-11	TANTAL. CHIP 10μF 10%	16V
C699	1-164-004-11	CERAMIC CHIP 0.1μF 10%	25V
C701	1-107-781-11	ELECT CHIP 47μF 20%	16V
C702	1-104-607-11	ELECT CHIP 47μF 20%	16V
C703	1-164-004-11	CERAMIC CHIP 0.1μF 10%	25V
C712	1-163-091-00	CERAMIC CHIP 8PF 0.25PF	50V
C718	1-164-004-11	CERAMIC CHIP 0.1μF 10%	25V
C719	1-104-913-11	TANTAL. CHIP 10μF 10%	16V
C722	1-164-004-11	CERAMIC CHIP 0.1μF 10%	25V
C725	1-164-004-11	CERAMIC CHIP 0.1μF 10%	25V
C726	1-164-004-11	CERAMIC CHIP 0.1μF 10%	25V
C727	1-104-913-11	TANTAL. CHIP 10μF 10%	16V
C732	1-164-004-11	CERAMIC CHIP 0.1μF 10%	25V
C737	1-164-004-11	CERAMIC CHIP 0.1μF 10%	25V
C738	1-164-004-11	CERAMIC CHIP 0.1μF 10%	25V
C745	1-164-004-11	CERAMIC CHIP 0.1μF 10%	25V
C751	1-164-004-11	CERAMIC CHIP 0.1μF 10%	25V
C752	1-104-913-11	TANTAL. CHIP 10μF 10%	16V
C755	1-104-913-11	TANTAL. CHIP 10μF 10%	16V
C756	1-164-004-11	CERAMIC CHIP 0.1μF 10%	25V
C758	1-164-004-11	CERAMIC CHIP 0.1μF 10%	25V
C759	1-164-004-11	CERAMIC CHIP 0.1μF 10%	25V
C760	1-164-004-11	CERAMIC CHIP 0.1μF 10%	25V
C781	1-164-222-11	CERAMIC CHIP 0.22μF	25V
C784	1-164-004-11	CERAMIC CHIP 0.1μF 10%	25V
C785	1-164-004-11	CERAMIC CHIP 0.1μF 10%	25V
C787	1-164-004-11	CERAMIC CHIP 0.1μF 10%	25V
C789	1-164-004-11	CERAMIC CHIP 0.1μF 10%	25V
C791	1-164-004-11	CERAMIC CHIP 0.1μF 10%	25V
C793	1-107-823-11	CERAMIC CHIP 0.47μF 10%	16V
C796	1-164-004-11	CERAMIC CHIP 0.1μF 10%	25V
		<CONNECTOR>	
CN280	* 1-760-388-11	CONNECTOR PIN (SMD) 9 PIN	
CN282	* 1-691-551-11	PIN, CONNECTOR (SMD) 8P	
CN283	1-569-516-11	PIN, CONNECTOR 18P	
		<DIODE>	
D12	8-719-914-43	DIODE DAN202K	
D16	8-719-914-43	DIODE DAN202K	
D22	8-719-914-43	DIODE DAN202K	
D24	8-719-914-43	DIODE DAN202K	
D121	8-719-800-76	DIODE 1SS226	
D501	8-719-801-78	DIODE 1SS184	
D511	8-719-801-78	DIODE 1SS184	
D512	8-719-422-12	DIODE MA8039	
D525	8-719-801-78	DIODE 1SS184	
D527	8-719-801-78	DIODE 1SS184	
D581	8-719-801-78	DIODE 1SS184	
D611	8-719-800-76	DIODE 1SS226	
D612	8-719-801-78	DIODE 1SS184	
D615	8-719-800-76	DIODE 1SS226	
D625	8-719-800-76	DIODE 1SS226	
D650	8-719-056-73	DIODE UDZ-TE-17-2.7B	
D651	8-719-800-76	DIODE 1SS226	
D652	8-719-800-76	DIODE 1SS226	
D667	8-719-977-28	DIODE DTZ10B	
D672	8-719-800-76	DIODE 1SS226	
D691	8-719-056-73	DIODE UDZ-TE-17-2.7B	
D710	8-719-801-78	DIODE 1SS184	
D726	8-719-109-93	DIODE RD6.2ESB2	
D737	8-719-800-76	DIODE 1SS226	
D738	8-719-104-34	DIODE 1S2836	
D751	8-719-056-73	DIODE UDZ-TE-17-2.7B	
D787	8-719-977-28	DIODE DTZ10B	
		<FILTER>	
FL11	1-233-512-21	FERRITE 37μH	

CAB

Ref.No.	Part No.	Description	Remark
FL12	1-233-512-21	FERRITE 37μH	
FL21	1-233-512-21	FERRITE 37μH	
FL101	1-233-512-21	FERRITE 37μH	
FL102	1-233-512-21	FERRITE 37μH	
FL103	1-233-512-21	FERRITE 37μH	
FL104	1-233-512-21	FERRITE 37μH	
FL111	1-233-283-11	FILTER, EMI (SMD)	
FL112	1-233-283-11	FILTER, EMI (SMD)	
FL113	1-233-283-11	FILTER, EMI (SMD)	
FL114	1-233-283-11	FILTER, EMI (SMD)	
	<IC>		
IC12	8-759-460-81	IC BA12FP-E2	
IC16	8-759-460-74	IC BA05FP-E2	
IC22	8-759-549-53	IC LM2990SX-12	
IC24	8-759-045-17	IC NJM79L05UA	
IC101	8-759-541-88	IC EPM7064STC44-10-PULSE	
IC102	8-759-564-62	IC MAX4224ESA-TG06	
IC141	8-759-381-53	IC UPC814G2-E2	
IC171	8-759-392-64	IC AD828AR	
IC560	8-759-710-78	IC NJM082BM-T1	
IC570	8-759-082-61	IC TC4W53FU	
IC595	8-759-542-11	IC MAX4223ESA-TG06	
IC661	8-759-381-53	IC UPC814G2-E2	
IC781	8-759-381-53	IC UPC814G2-E2	
	<JACK>		
J280	1-568-547-11	JACK, MINIATUER PIN	
	<COIL>		
L648	1-412-066-21	INDUCTOR CHIP 220μH	
	<TRANSISTOR>		
Q121	8-729-033-16	TRANSISTOR 2SA1669-TB	
Q133	8-729-112-65	TRANSISTOR 2SA1462-T1Y33	
Q141	8-729-116-05	TRANSISTOR 2SK160-K5	
Q441	8-729-107-31	TRANSISTOR 2SC3545-T43	
Q446	8-729-107-31	TRANSISTOR 2SC3545-T43	
Q447	8-729-216-22	TRANSISTOR 2SA1162-G	
Q451	8-729-107-31	TRANSISTOR 2SC3545-T43	
Q456	8-729-107-31	TRANSISTOR 2SC3545-T43	
Q457	8-729-216-22	TRANSISTOR 2SA1162-G	
Q501	8-729-033-16	TRANSISTOR 2SA1669-TB	
Q502	8-729-112-65	TRANSISTOR 2SA1462-T1Y33	
Q510	8-729-129-54	TRANSISTOR 2SC2954	
Q511	8-729-129-54	TRANSISTOR 2SC2954	
Q525	8-729-107-31	TRANSISTOR 2SC3545-T43	
Q527	8-729-230-49	TRANSISTOR 2SC2712-YG	
Q540	8-729-216-22	TRANSISTOR 2SA1162-G	
Q551	8-729-129-54	TRANSISTOR 2SC2954	
Q563	8-729-230-49	TRANSISTOR 2SC2712-YG	
Q581	8-729-112-65	TRANSISTOR 2SA1462-T1Y33	
Q605	8-729-107-31	TRANSISTOR 2SC3545-T43	
Q610	8-729-033-16	TRANSISTOR 2SA1669-TB	
Q618	8-729-112-65	TRANSISTOR 2SA1462-T1Y33	
Q625	8-729-143-46	TRANSISTOR 2SC3356-R24	
Q631	8-729-143-46	TRANSISTOR 2SC3356-R24	
Q645	8-729-033-16	TRANSISTOR 2SA1669-TB	
Q647	8-729-107-31	TRANSISTOR 2SC3545-T43	
Q651	8-729-143-46	TRANSISTOR 2SC3356-R24	
Q656	8-729-129-54	TRANSISTOR 2SC2954	
Q665	8-729-116-05	TRANSISTOR 2SK160-K5	
Q671	8-729-107-31	TRANSISTOR 2SC3545-T43	
Q691	8-729-143-46	TRANSISTOR 2SC3356-R24	
Q692	8-729-033-16	TRANSISTOR 2SA1669-TB	
Q701	8-729-129-54	TRANSISTOR 2SC2954	
Q721	8-729-143-46	TRANSISTOR 2SC3356-R24	
Q723	8-729-107-31	TRANSISTOR 2SC3545-T43	
Q726	8-729-129-54	TRANSISTOR 2SC2954	
Q733	8-729-129-54	TRANSISTOR 2SC2954	
Q736	8-729-033-16	TRANSISTOR 2SA1669-TB	
Q738	8-729-112-65	TRANSISTOR 2SA1462-T1Y33	
Q741	8-729-112-65	TRANSISTOR 2SA1462-T1Y33	
Q751	8-729-143-46	TRANSISTOR 2SC3356-R24	
Q752	8-729-033-16	TRANSISTOR 2SA1669-TB	
Q781	8-729-116-05	TRANSISTOR 2SK160-K5	
Q797	8-729-230-49	TRANSISTOR 2SC2712-YG	
	<RESISTOR>		
R51	1-216-073-00	RES,CHIP 10K 5% 1/10W	
R63	1-216-073-00	RES,CHIP 10K 5% 1/10W	
R75	1-216-295-91	SHORT 0	
R76	1-216-295-91	SHORT 0	
R82	1-216-049-91	RES,CHIP 1K 5% 1/10W	
R83	1-216-065-91	RES,CHIP 4.7K 5% 1/10W	
R84	1-216-025-91	RES,CHIP 100 5% 1/10W	
R85	1-216-025-91	RES,CHIP 100 5% 1/10W	
R101	1-216-631-11	METAL CHIP 150 0.50% 1/10W	
R102	1-216-631-11	METAL CHIP 150 0.50% 1/10W	
R103	1-216-017-91	RES,CHIP 47 5% 1/10W	
R105	1-216-642-11	METAL CHIP 430 0.50% 1/10W	
R106	1-216-643-11	METAL CHIP 470 0.50% 1/10W	
R121	1-216-017-91	RES,CHIP 47 5% 1/10W	
R131	1-216-659-11	METAL CHIP 2.2K 0.50% 1/10W	
R132	1-216-667-11	METAL CHIP 4.7K 0.50% 1/10W	
R133	1-216-033-00	RES,CHIP 220 5% 1/10W	
R135	1-216-647-11	METAL CHIP 680 0.50% 1/10W	
R136	1-216-647-11	METAL CHIP 680 0.50% 1/10W	
R140	1-216-049-91	RES,CHIP 1K 5% 1/10W	
R141	1-216-121-91	RES,CHIP 1M 5% 1/10W	
R142	1-216-025-91	RES,CHIP 100 5% 1/10W	
R143	1-216-025-91	RES,CHIP 100 5% 1/10W	
R145	1-216-677-11	METAL CHIP 12K 0.50% 1/10W	
R146	1-216-683-11	METAL CHIP 22K 0.50% 1/10W	
R147	1-216-295-91	SHORT 0	
R148	1-216-049-91	RES,CHIP 1K 5% 1/10W	
R151	1-216-073-00	RES,CHIP 10K 5% 1/10W	
R155	1-216-057-00	RES,CHIP 2.2K 5% 1/10W	
R171	1-216-025-91	RES,CHIP 100 5% 1/10W	
R172	1-216-049-91	RES,CHIP 1K 5% 1/10W	
R173	1-216-051-00	RES,CHIP 1.2K 5% 1/10W	
R174	1-216-025-91	RES,CHIP 100 5% 1/10W	

Ref.No.	Part No.	Description			Remark
R180	1-216-025-91	RES,CHIP	100	5%	1/10W
R182	1-216-049-91	RES,CHIP	1K	5%	1/10W
R183	1-216-049-91	RES,CHIP	1K	5%	1/10W
R184	1-216-025-91	RES,CHIP	100	5%	1/10W
R441	1-216-065-91	RES,CHIP	4.7K	5%	1/10W
R445	1-216-065-91	RES,CHIP	4.7K	5%	1/10W
R446	1-216-025-91	RES,CHIP	100	5%	1/10W
R447	1-216-001-00	RES,CHIP	10	5%	1/10W
R448	1-216-025-91	RES,CHIP	100	5%	1/10W
R451	1-216-065-91	RES,CHIP	4.7K	5%	1/10W
R455	1-216-065-91	RES,CHIP	4.7K	5%	1/10W
R456	1-216-025-91	RES,CHIP	100	5%	1/10W
R457	1-216-001-00	RES,CHIP	10	5%	1/10W
R458	1-216-025-91	RES,CHIP	100	5%	1/10W
R501	1-216-033-00	RES,CHIP	220	5%	1/10W
R502	1-216-643-11	METAL CHIP	470	0.50%	1/10W
R503	1-216-033-00	RES,CHIP	220	5%	1/10W
R504	1-216-659-11	METAL CHIP	2.2K	0.50%	1/10W
R505	1-216-667-11	METAL CHIP	4.7K	0.50%	1/10W
R506	1-216-045-00	RES,CHIP	680	5%	1/10W
R507	1-216-045-00	RES,CHIP	680	5%	1/10W
R508	1-216-045-00	RES,CHIP	680	5%	1/10W
R509	1-216-045-00	RES,CHIP	680	5%	1/10W
R510	1-216-017-91	RES,CHIP	47	5%	1/10W
R511	1-216-033-00	RES,CHIP	220	5%	1/10W
R521	1-216-643-11	METAL CHIP	470	0.50%	1/10W
R523	1-216-057-00	RES,CHIP	2.2K	5%	1/10W
R524	1-216-065-91	RES,CHIP	4.7K	5%	1/10W
R525	1-216-081-00	RES,CHIP	22K	5%	1/10W
R526	1-216-057-00	RES,CHIP	2.2K	5%	1/10W
R527	1-216-073-00	RES,CHIP	10K	5%	1/10W
R540	1-216-033-00	RES,CHIP	220	5%	1/10W
R541	1-216-057-00	RES,CHIP	2.2K	5%	1/10W
R542	1-216-071-00	RES,CHIP	8.2K	5%	1/10W
R551	1-216-051-00	RES,CHIP	1.2K	5%	1/10W
R552	1-216-075-00	RES,CHIP	12K	5%	1/10W
R553	1-216-033-00	RES,CHIP	220	5%	1/10W
R554	1-220-273-11	RES,CHIP	1K	5%	1/2W
R560	1-216-049-91	RES,CHIP	1K	5%	1/10W
R561	1-216-675-11	METAL CHIP	10K	0.50%	1/10W
R562	1-216-675-11	METAL CHIP	10K	0.50%	1/10W
R563	1-216-033-00	RES,CHIP	220	5%	1/10W
R564	1-216-653-11	METAL CHIP	1.2K	0.50%	1/10W
R566	1-216-675-11	METAL CHIP	10K	0.50%	1/10W
R567	1-216-049-91	RES,CHIP	1K	5%	1/10W
R571	1-216-049-91	RES,CHIP	1K	5%	1/10W
R572	1-216-049-91	RES,CHIP	1K	5%	1/10W
R573	1-216-049-91	RES,CHIP	1K	5%	1/10W
R581	1-216-033-00	RES,CHIP	220	5%	1/10W
R591	1-216-017-91	RES,CHIP	47	5%	1/10W
R592	1-216-295-91	SHORT 0			
R593	1-216-295-91	SHORT 0			
R595	1-216-043-91	RES,CHIP	560	5%	1/10W
R596	1-216-295-91	SHORT 0			
R605	1-216-033-00	RES,CHIP	220	5%	1/10W
R606	1-216-687-11	METAL CHIP	33K	0.50%	1/10W
R607	1-216-017-91	RES,CHIP	47	5%	1/10W
R609	1-216-295-91	SHORT 0			

Ref.No.	Part No.	Description			Remark
R610	1-216-017-91	RES,CHIP	47	5%	1/10W
R616	1-216-653-11	METAL CHIP	1.2K	0.50%	1/10W
R617	1-216-667-11	METAL CHIP	4.7K	0.50%	1/10W
R618	1-216-025-91	RES,CHIP	100	5%	1/10W
R619	1-216-631-11	METAL CHIP	150	0.50%	1/10W
R621	1-216-659-11	METAL CHIP	2.2K	0.50%	1/10W
R622	1-216-627-11	METAL CHIP	100	0.50%	1/10W
R625	1-216-033-00	RES,CHIP	220	5%	1/10W
R631	1-216-017-91	RES,CHIP	47	5%	1/10W
R632	1-216-627-11	METAL CHIP	100	0.50%	1/10W
R633	1-216-627-11	METAL CHIP	100	0.50%	1/10W
R635	1-216-641-11	METAL CHIP	390	0.50%	1/10W
R636	1-216-635-11	METAL CHIP	220	0.50%	1/10W
R645	1-216-001-00	RES,CHIP	10	5%	1/10W
R646	1-216-073-00	RES,CHIP	10K	5%	1/10W
R647	1-216-033-00	RES,CHIP	220	5%	1/10W
R648	1-216-653-11	METAL CHIP	1.2K	0.50%	1/10W
R649	1-216-673-11	METAL CHIP	8.2K	0.50%	1/10W
R650	1-216-639-11	METAL CHIP	330	0.50%	1/10W
R651	1-216-017-91	RES,CHIP	47	5%	1/10W
R653	1-216-635-11	METAL CHIP	220	0.50%	1/10W
R654	1-216-627-11	METAL CHIP	100	0.50%	1/10W
R655	1-216-627-11	METAL CHIP	100	0.50%	1/10W
R656	1-216-635-11	METAL CHIP	220	0.50%	1/10W
R657	1-216-033-00	RES,CHIP	220	5%	1/10W
R658	1-216-667-11	METAL CHIP	4.7K	0.50%	1/10W
R659	1-216-653-11	METAL CHIP	1.2K	0.50%	1/10W
R661	1-216-049-91	RES,CHIP	1K	5%	1/10W
R665	1-216-121-91	RES,CHIP	1M	5%	1/10W
R666	1-216-049-91	RES,CHIP	1K	5%	1/10W
R667	1-216-073-00	RES,CHIP	10K	5%	1/10W
R668	1-216-049-91	RES,CHIP	1K	5%	1/10W
R669	1-216-081-00	RES,CHIP	22K	5%	1/10W
R672	1-216-025-91	RES,CHIP	100	5%	1/10W
R675	1-216-627-11	METAL CHIP	100	0.50%	1/10W
R676	1-216-001-00	RES,CHIP	10	5%	1/10W
R681	1-216-677-11	METAL CHIP	12K	0.50%	1/10W
R683	1-216-669-11	METAL CHIP	5.6K	0.50%	1/10W
R691	1-216-017-91	RES,CHIP	47	5%	1/10W
R692	1-216-017-91	RES,CHIP	47	5%	1/10W
R693	1-216-001-00	RES,CHIP	10	5%	1/10W
R695	1-216-001-00	RES,CHIP	10	5%	1/10W
R696	1-216-001-00	RES,CHIP	10	5%	1/10W
R698	1-220-273-11	RES,CHIP	1K	5%	1/2W
R699	1-220-273-11	RES,CHIP	1K	5%	1/2W
R701	1-216-017-91	RES,CHIP	47	5%	1/10W
R704	1-216-635-11	METAL CHIP	220	0.50%	1/10W
R710	1-216-065-91	RES,CHIP	4.7K	5%	1/10W
R711	1-216-637-11	METAL CHIP	270	0.50%	1/10W
R712	1-216-635-11	METAL CHIP	220	0.50%	1/10W
R717	1-216-627-11	METAL CHIP	100	0.50%	1/10W
R719	1-216-643-11	METAL CHIP	470	0.50%	1/10W
R720	1-216-635-11	METAL CHIP	220	0.50%	1/10W
R721	1-216-017-91	RES,CHIP	47	5%	1/10W
R722	1-216-057-00	RES,CHIP	2.2K	5%	1/10W
R723	1-216-025-91	RES,CHIP	100	5%	1/10W
R724	1-216-667-11	METAL CHIP	4.7K	0.50%	1/10W
R725	1-216-657-11	METAL CHIP	1.8K	0.50%	1/10W
R726	1-216-017-91	RES,CHIP	47	5%	1/10W

Ref.No.	Part No.	Description			Remark
R727	1-216-017-91	RES,CHIP	47	5%	1/10W
R731	1-216-667-11	METAL CHIP	4.7K	0.50%	1/10W
R732	1-216-669-11	METAL CHIP	5.6K	0.50%	1/10W
R733	1-216-025-91	RES,CHIP	100	5%	1/10W
R734	1-220-269-11	RES,CHIP	330	5%	1/2W
R735	1-220-274-11	RES,CHIP	1.2K	5%	1/2W
R736	1-216-017-91	RES,CHIP	47	5%	1/10W
R737	1-220-274-11	RES,CHIP	1.2K	5%	1/2W
R738	1-216-033-00	RES,CHIP	220	5%	1/10W
R739	1-216-653-11	METAL CHIP	1.2K	0.50%	1/10W
R740	1-216-667-11	METAL CHIP	4.7K	0.50%	1/10W
R741	1-216-033-00	RES,CHIP	220	5%	1/10W
R742	1-216-659-11	METAL CHIP	2.2K	0.50%	1/10W
R743	1-216-651-11	METAL CHIP	1K	0.50%	1/10W
R745	1-216-659-11	METAL CHIP	2.2K	0.50%	1/10W
R746	1-216-669-11	METAL CHIP	5.6K	0.50%	1/10W
R751	1-216-017-91	RES,CHIP	47	5%	1/10W
R752	1-216-017-91	RES,CHIP	47	5%	1/10W
R753	1-216-001-00	RES,CHIP	10	5%	1/10W
R754	1-216-635-11	METAL CHIP	220	0.50%	1/10W
R755	1-216-635-11	METAL CHIP	220	0.50%	1/10W
R756	1-216-001-00	RES,CHIP	10	5%	1/10W
R757	1-216-001-00	RES,CHIP	10	5%	1/10W
R758	1-220-273-11	RES,CHIP	1K	5%	1/2W
R759	1-220-273-11	RES,CHIP	1K	5%	1/2W
R781	1-216-049-91	RES,CHIP	1K	5%	1/10W
R782	1-216-121-91	RES,CHIP	1M	5%	1/10W
R783	1-216-049-91	RES,CHIP	1K	5%	1/10W
R784	1-216-677-11	METAL CHIP	12K	0.50%	1/10W
R785	1-216-659-11	METAL CHIP	2.2K	0.50%	1/10W
R786	1-216-651-11	METAL CHIP	1K	0.50%	1/10W
R787	1-216-049-91	RES,CHIP	1K	5%	1/10W
R789	1-216-049-91	RES,CHIP	1K	5%	1/10W
R791	1-216-073-00	RES,CHIP	10K	5%	1/10W
R795	1-216-675-11	METAL CHIP	10K	0.50%	1/10W
R796	1-216-675-11	METAL CHIP	10K	0.50%	1/10W
R797	1-216-025-91	RES,CHIP	100	5%	1/10W
R798	1-216-057-00	RES,CHIP	2.2K	5%	1/10W
	<RESISTOR BLOCK>				
RB51	1-233-576-11	RES, CHIP	NETWORK 100		
RB71	1-233-414-11	RES, CHIP	NETWORK 4.7K (3216)		
RB72	1-233-576-11	RES, CHIP	NETWORK 100		
RB81	1-233-576-11	RES, CHIP	NETWORK 100		
	<VARIABLE RESISTOR>				
RV145	1-230-871-11	RES, ADJ, METAL GLAZE 22K			
RV622	1-238-785-21	RES, ADJ, CERMET 2K			
RV623	1-238-783-11	RES, ADJ, CERMET 500			
RV682	1-238-786-11	RES, ADJ, CERMET 5K			
RV718	1-238-785-21	RES, ADJ, CERMET 2K			
RV785	1-238-786-11	RES, ADJ, CERMET 5K			
RV796	1-230-871-11	RES, ADJ, METAL GLAZE 22K			
	<SWITCH>				
S796	1-571-674-11	SWITCH, SLIDE			

Ref.No.	Part No.	Description	Remark
	<TEST PIN>		
TP21	1-535-757-11	CHIP, CHECKER	
TP22	1-535-757-11	CHIP, CHECKER	
TP23	1-535-757-11	CHIP, CHECKER	
TP24	1-535-757-11	CHIP, CHECKER	
TP34	1-535-757-11	CHIP, CHECKER	
TP35	1-535-757-11	CHIP, CHECKER	
TP71	1-535-757-11	CHIP, CHECKER	
TP72	1-535-757-11	CHIP, CHECKER	
TP73	1-535-757-11	CHIP, CHECKER	
TP501	1-535-757-11	CHIP, CHECKER	
TP511	1-535-757-11	CHIP, CHECKER	
TP691	1-535-757-11	CHIP, CHECKER	
TP751	1-535-757-11	CHIP, CHECKER	

****

CDB MOUNTED PC BOARD
****

Ref.No.	Part No.	Description			Remark
	<CAPACITOR>				
C800	1-128-304-11	ELECT CHIP	330μF	20%	16V
C801	1-164-004-11	CERAMIC CHIP	0.1μF	10%	25V
C802	1-104-913-11	TANTAL. CHIP	10μF	10%	16V
C803	1-104-913-11	TANTAL. CHIP	10μF	10%	16V
C805	1-164-004-11	CERAMIC CHIP	0.1μF	10%	25V
C811	1-124-779-00	ELECT CHIP	10μF	20%	16V
C812	1-164-004-11	CERAMIC CHIP	0.1μF	10%	25V
C815	1-163-251-11	CERAMIC CHIP	100PF	5%	50V
C816	1-163-227-11	CERAMIC CHIP	10PF	0.5PF	50V
C817	1-163-121-00	CERAMIC CHIP	150PF	5%	50V
C818	1-162-117-00	CERAMIC	100PF	10%	500V
C820	1-107-961-91	ELECT	10μF	20%	250V
C821	1-102-050-00	CERAMIC	0.01μF	99%	500V
C822	1-107-943-11	ELECT	10μF	20%	160V
C823	1-164-004-11	CERAMIC CHIP	0.1μF	10%	25V
C824	1-164-004-11	CERAMIC CHIP	0.1μF	10%	25V
C826	1-126-397-11	ELECT CHIP	33μF	20%	25V
C827	1-164-004-11	CERAMIC CHIP	0.1μF	10%	25V
C828	1-164-506-11	CERAMIC CHIP	4.7μF		16V
C829	1-164-506-11	CERAMIC CHIP	4.7μF		16V
C830	1-164-004-11	CERAMIC CHIP	0.1μF	10%	25V
C832	1-164-004-11	CERAMIC CHIP	0.1μF	10%	25V
C833	1-102-050-00	CERAMIC	0.01μF	99%	500V
C834	1-107-961-91	ELECT	10μF	20%	250V
C851	1-110-648-11	ELECT CHIP	220μF	20%	25V
C852	1-128-304-11	ELECT CHIP	330μF	20%	16V
C853	1-164-004-11	CERAMIC CHIP	0.1μF	10%	25V
C854	1-104-913-11	TANTAL. CHIP	10μF	10%	16V
C862	1-128-304-11	ELECT CHIP	330μF	20%	16V
C901	1-164-004-11	CERAMIC CHIP	0.1μF	10%	25V
C902	1-164-004-11	CERAMIC CHIP	0.1μF	10%	25V
C903	1-164-004-11	CERAMIC CHIP	0.1μF	10%	25V
C904	1-104-913-11	TANTAL. CHIP	10μF	10%	16V
C905	1-164-004-11	CERAMIC CHIP	0.1μF	10%	25V
C906	1-104-913-11	TANTAL. CHIP	10μF	10%	16V

Ref.No.	Part No.	Description	Remark
C911	1-124-779-00	ELECT CHIP 10μF 20% 16V	
C912	1-164-004-11	CERAMIC CHIP 0.1μF 10% 25V	
C913	1-163-249-11	CERAMIC CHIP 82PF 5% 50V	
C914	1-163-235-11	CERAMIC CHIP 22PF 5% 50V	
C915	1-163-243-11	CERAMIC CHIP 47PF 5% 50V	
C953	1-164-004-11	CERAMIC CHIP 0.1μF 10% 25V	
C954	1-104-913-11	TANTAL. CHIP 10μF 10% 16V	
C956	1-162-117-00	CERAMIC 100PF 10% 500V	
C957	1-102-050-00	CERAMIC 0.01μF 99% 500V	
C958	1-107-943-11	ELECT 10μF 20% 160V	
C961	1-102-038-00	CERAMIC 0.001μF 500V	
C962	1-163-275-11	CERAMIC CHIP 0.001μF 5% 50V	
C965	1-164-004-11	CERAMIC CHIP 0.1μF 10% 25V	
C968	1-164-004-11	CERAMIC CHIP 0.1μF 10% 25V	
C969	1-164-004-11	CERAMIC CHIP 0.1μF 10% 25V	
C970	1-164-004-11	CERAMIC CHIP 0.1μF 10% 25V	
C971	1-124-779-00	ELECT CHIP 10μF 20% 16V	
C973	1-164-004-11	CERAMIC CHIP 0.1μF 10% 25V	
C974	1-164-004-11	CERAMIC CHIP 0.1μF 10% 25V	
C977	1-164-004-11	CERAMIC CHIP 0.1μF 10% 25V	
C982	1-163-251-11	CERAMIC CHIP 100PF 5% 50V	
C991	1-164-004-11	CERAMIC CHIP 0.1μF 10% 25V	
C992	1-164-004-11	CERAMIC CHIP 0.1μF 10% 25V	
C993	1-164-004-11	CERAMIC CHIP 0.1μF 10% 25V	
C995	1-163-251-11	CERAMIC CHIP 100PF 5% 50V	
C996	1-164-004-11	CERAMIC CHIP 0.1μF 10% 25V	
C997	1-164-004-11	CERAMIC CHIP 0.1μF 10% 25V	
C998	1-164-506-11	CERAMIC CHIP 4.7μF 16V	
C999	1-164-506-11	CERAMIC CHIP 4.7μF 16V	
C1000	1-164-004-11	CERAMIC CHIP 0.1μF 10% 25V	
C1002	1-164-004-11	CERAMIC CHIP 0.1μF 10% 25V	
C1201	1-107-943-11	ELECT 10μF 20% 160V	
C1210	1-107-943-11	ELECT 10μF 20% 160V	
C1211	1-107-823-11	CERAMIC CHIP 0.47μF 10% 16V	
C1212	1-164-004-11	CERAMIC CHIP 0.1μF 10% 25V	
C1213	1-164-004-11	CERAMIC CHIP 0.1μF 10% 25V	
C1214	1-164-004-11	CERAMIC CHIP 0.1μF 10% 25V	
C1215	1-164-004-11	CERAMIC CHIP 0.1μF 10% 25V	
C1221	1-107-943-11	ELECT 10μF 20% 160V	
	<CONNECTOR>		
CN284	* 1-564-726-11	PIN, CONNECTOR (SMALL TYPE)10P	
CN285	* 1-564-507-11	PLUG, CONNECTOR 4P	
CN286	* 1-564-507-11	PLUG, CONNECTOR 4P	
CN289	* 1-564-518-11	PLUG, CONNECTOR 3P	
CN290	* 1-785-522-11	PIN, CONNECTOR (PC BOARD) 18P	
	<DIODE>		
D801	8-719-800-76	DIODE 1SS226	
D806	8-719-978-04	DIODE DTZ-TT11-3.3B	
D811	8-719-901-83	DIODE 1SS83	
D812	8-719-901-83	DIODE 1SS83	
D820	8-719-800-76	DIODE 1SS226	
D821	8-719-106-53	DIODE RD10M-B2	
D831	8-719-107-24	DIODE RD20M-B2	
D832	8-719-901-83	DIODE 1SS83	
D833	8-719-901-83	DIODE 1SS83	
D841	8-719-901-83	DIODE 1SS83	
D842	8-719-901-83	DIODE 1SS83	
D851	8-719-914-43	DIODE DAN202K	
D861	8-719-914-43	DIODE DAN202K	
D901	8-719-800-76	DIODE 1SS226	
D906	8-719-978-04	DIODE DTZ-TT11-3.3B	
D941	8-719-901-83	DIODE 1SS83	
D942	8-719-901-83	DIODE 1SS83	
D945	8-719-018-98	DIODE 1SS311(TE85L)	
D955	8-719-800-76	DIODE 1SS226	
D956	8-719-106-53	DIODE RD10M-B2	
D960	8-719-801-78	DIODE 1SS184	
D961	8-719-800-76	DIODE 1SS226	
D965	8-719-105-82	DIODE RD5.1M-B2	
D981	8-719-106-53	DIODE RD10M-B2	
D982	8-719-800-76	DIODE 1SS226	
D1001	8-719-976-96	DIODE DTZ4.7C	
D1211	8-719-800-76	DIODE 1SS226	
D1215	8-719-106-53	DIODE RD10M-B2	
	<FILTER>		
FL1001	1-233-831-11	FILTER, EMI	
FL1002	1-233-831-11	FILTER, EMI	
FL1011	1-233-512-21	FERRITE 37μH	
FL1012	1-233-512-21	FERRITE 37μH	
FL1013	1-233-512-21	FERRITE 37μH	
FL1014	1-233-512-21	FERRITE 37μH	
	<IC>		
IC801	8-749-014-86	IC VPJ15H	
IC802	8-759-710-78	IC NJM082BM-T1	
IC851	8-759-460-81	IC BA12FP-E2	
IC861	8-759-335-28	IC TA78M09F(TE16L)	
IC901	8-749-014-86	IC VPJ15H	
IC902	8-759-381-53	IC UPC814G2-E2	
IC961	8-749-011-45	IC NJL5152MD	
IC971	8-759-710-78	IC NJM082BM-T1	
IC981	8-759-234-77	IC TC4S66F	
IC990	8-759-710-78	IC NJM082BM-T1	
IC998	8-759-710-78	IC NJM082BM-T1	
IC1211	8-759-198-34	IC TA75S558F	
	<COIL>		
L801	1-412-533-21	INDUCTOR 47μH	
L818	1-414-137-31	INDUCTOR 0.22μH	
L951	1-412-533-21	INDUCTOR 47μH	
L954	1-414-137-31	INDUCTOR 0.22μH	
L955	1-414-137-31	INDUCTOR 0.22μH	
L956	1-414-137-31	INDUCTOR 0.22μH	
L957	1-414-137-31	INDUCTOR 0.22μH	
	<TRANSISTOR>		
Q801	8-729-033-16	TRANSISTOR 2SA1669-TB	
Q802	8-729-112-65	TRANSISTOR 2SA1462-T1Y33	
Q806	8-729-145-13	TRANSISTOR 2SC3356-(R25)	
Q807	8-729-033-16	TRANSISTOR 2SA1669-TB	

CDB

Ref.No.	Part No.	Description				Remark
Q815	8-729-116-05	TRANSISTOR 2SK160-K5				
Q819	8-729-801-88	TRANSISTOR 2SA1381-E				
Q821	8-729-821-02	TRANSISTOR 2SC3503-DE				
Q901	8-729-033-16	TRANSISTOR 2SA1669-TB				
Q902	8-729-112-65	TRANSISTOR 2SA1462-T1Y33				
Q906	8-729-145-13	TRANSISTOR 2SC3356-(R25)				
Q907	8-729-033-16	TRANSISTOR 2SA1669-TB				
Q948	8-729-804-63	TRANSISTOR 2SA1406-E				
Q961	1-801-806-11	TRANSISTOR DTC144EKA-T146				
Q974	8-729-230-49	TRANSISTOR 2SC2712-YG				
Q1204	8-729-821-02	TRANSISTOR 2SC3503-DE				
Q1210	8-729-111-07	TRANSISTOR 2SD1590-L				
	<RESISTOR>					
R801	1-216-017-91	RES,CHIP	47	5%	1/10W	
R802	1-216-033-00	RES,CHIP	220	5%	1/10W	
R803	1-216-025-91	RES,CHIP	100	5%	1/10W	
R804	1-216-653-11	METAL CHIP	1.2K	0.50%	1/10W	
R805	1-216-667-11	METAL CHIP	4.7K	0.50%	1/10W	
R806	1-216-017-91	RES,CHIP	47	5%	1/10W	
R807	1-216-017-91	RES,CHIP	47	5%	1/10W	
R808	1-216-001-00	RES,CHIP	10	5%	1/10W	
R809	1-216-001-00	RES,CHIP	10	5%	1/10W	
R810	1-216-001-00	RES,CHIP	10	5%	1/10W	
R811	1-216-627-11	METAL CHIP	100	0.50%	1/10W	
R814	1-216-619-11	METAL CHIP	47	0.50%	1/10W	
R815	1-249-401-11	CARBON	47	5%	1/4W	F
R819	1-216-033-00	RES,CHIP	220	5%	1/10W	
R820	1-216-049-91	RES,CHIP	1K	5%	1/10W	
R821	1-215-485-00	METAL	470K	1%	1/4W	
R822	1-215-485-00	METAL	470K	1%	1/4W	
R823	1-215-461-00	METAL	47K	1%	1/4W	
R824	1-216-121-91	RES,CHIP	1M	5%	1/10W	
R825	1-216-025-91	RES,CHIP	100	5%	1/10W	
R826	1-216-075-00	RES,CHIP	12K	5%	1/10W	
R827	1-216-667-11	METAL CHIP	4.7K	0.50%	1/10W	
R828	1-216-675-11	METAL CHIP	10K	0.50%	1/10W	
R829	1-216-057-00	RES,CHIP	2.2K	5%	1/10W	
R830	1-216-667-11	METAL CHIP	4.7K	0.50%	1/10W	
R831	1-215-461-00	METAL	47K	1%	1/4W	
R832	1-249-417-11	CARBON	1K	5%	1/4W	
R833	1-249-417-11	CARBON	1K	5%	1/4W	
R841	1-215-477-00	METAL	220K	1%	1/4W	
R851	1-220-274-11	RES,CHIP	1.2K	5%	1/2W	
R852	1-220-274-11	RES,CHIP	1.2K	5%	1/2W	
R901	1-216-017-91	RES,CHIP	47	5%	1/10W	
R902	1-216-033-00	RES,CHIP	220	5%	1/10W	
R903	1-216-025-91	RES,CHIP	100	5%	1/10W	
R904	1-216-653-11	METAL CHIP	1.2K	0.50%	1/10W	
R905	1-216-667-11	METAL CHIP	4.7K	0.50%	1/10W	
R906	1-216-017-91	RES,CHIP	47	5%	1/10W	
R907	1-216-017-91	RES,CHIP	47	5%	1/10W	
R908	1-216-001-00	RES,CHIP	10	5%	1/10W	
R909	1-216-001-00	RES,CHIP	10	5%	1/10W	
R910	1-216-001-00	RES,CHIP	10	5%	1/10W	
R911	1-216-627-11	METAL CHIP	100	0.50%	1/10W	
R912	1-216-619-11	METAL CHIP	47	0.50%	1/10W	
R919	1-216-033-00	RES,CHIP	220	5%	1/10W	
R921	1-215-485-00	METAL	470K	1%	1/4W	
R922	1-215-485-00	METAL	470K	1%	1/4W	
R923	1-215-445-00	METAL	10K	1%	1/4W	
R924	1-216-049-91	RES,CHIP	1K	5%	1/10W	
R925	1-216-025-91	RES,CHIP	100	5%	1/10W	
R951	1-220-274-11	RES,CHIP	1.2K	5%	1/2W	
R952	1-220-274-11	RES,CHIP	1.2K	5%	1/2W	
R955	1-249-401-11	CARBON	47	5%	1/4W	F
R957	1-215-493-00	METAL	1M	1%	1/4W	
R958	1-219-741-91	CARBON	10	5%	1/2W	
R959	1-219-743-11	CARBON	100	5%	1/2W	
R960	1-216-649-11	METAL CHIP	820	0.50%	1/10W	
R961	1-216-683-11	METAL CHIP	22K	0.50%	1/10W	
R967	1-216-025-91	RES,CHIP	100	5%	1/10W	
R971	1-216-025-91	RES,CHIP	100	5%	1/10W	
R972	1-216-653-11	METAL CHIP	1.2K	0.50%	1/10W	
R973	1-216-653-11	METAL CHIP	1.2K	0.50%	1/10W	
R974	1-216-073-00	RES,CHIP	10K	5%	1/10W	
R975	1-216-045-00	RES,CHIP	680	5%	1/10W	
R976	1-216-675-11	METAL CHIP	10K	0.50%	1/10W	
R977	1-216-073-00	RES,CHIP	10K	5%	1/10W	
R978	1-216-025-91	RES,CHIP	100	5%	1/10W	
R979	1-216-025-91	RES,CHIP	100	5%	1/10W	
R982	1-216-065-91	RES,CHIP	4.7K	5%	1/10W	
R983	1-216-089-91	RES,CHIP	47K	5%	1/10W	
R984	1-216-017-91	RES,CHIP	47	5%	1/10W	
R990	1-216-025-91	RES,CHIP	100	5%	1/10W	
R991	1-216-673-11	METAL CHIP	8.2K	0.50%	1/10W	
R992	1-216-673-11	METAL CHIP	8.2K	0.50%	1/10W	
R993	1-216-049-91	RES,CHIP	1K	5%	1/10W	
R994	1-216-025-91	RES,CHIP	100	5%	1/10W	
R995	1-216-025-91	RES,CHIP	100	5%	1/10W	
R996	1-216-675-11	METAL CHIP	10K	0.50%	1/10W	
R997	1-216-659-11	METAL CHIP	2.2K	0.50%	1/10W	
R998	1-216-105-91	RES,CHIP	220K	5%	1/10W	
R999	1-216-049-91	RES,CHIP	1K	5%	1/10W	
R1001	1-216-057-00	RES,CHIP	2.2K	5%	1/10W	
R1007	1-216-619-11	METAL CHIP	47	0.50%	1/10W	
R1201	1-215-439-00	METAL	5.6K	1%	1/4W	
R1202	1-215-455-00	METAL	27K	1%	1/4W	
R1203	1-216-667-11	METAL CHIP	4.7K	0.50%	1/10W	
R1204	1-216-025-91	RES,CHIP	100	5%	1/10W	
R1211	1-216-049-91	RES,CHIP	1K	5%	1/10W	
R1212	1-216-073-00	RES,CHIP	10K	5%	1/10W	
R1213	1-216-675-11	METAL CHIP	10K	0.50%	1/10W	
R1214	1-216-675-11	METAL CHIP	10K	0.50%	1/10W	
R1221	1-215-477-00	METAL	220K	1%	1/4W	
R1222	1-215-485-00	METAL	470K	1%	1/4W	
R1223	1-216-699-11	METAL CHIP	100K	0.50%	1/10W	
R1224	1-216-683-11	METAL CHIP	22K	0.50%	1/10W	
	<VARIABLE RESISTOR>					
⊠RV965 ⚠		RES, ADJ, CERMET 2K				
RV1223	1-238-804-11	RES, ADJ, CERMET 50K				

Ref.No.	Part No.	Description			Remark
**********					
	* A-1343-549-A	EC MOUNTED PC BOARD **********			
	<CAPACITOR>				
C2001	1-136-153-00	FILM	0.01µF	5%	50V
	<CONNECTOR>				
CN121	1-564-718-11	PIN, CONNECTOR (SMALL TYPE) 2P			
CN127	1-564-721-11	PIN, CONNECTOR (SMALL TYPE) 5P			
	<RESISTOR>				
R2001	1-247-807-31	CARBON	100	5%	1/4W
R2002	1-247-807-31	CARBON	100	5%	1/4W
	<SWITCH>				
S2001	1-570-865-11	SWITCH, SLIDE			
S2002	1-570-245-11	SWITCH, MICRO			
**********					
	* A-1343-562-A	EBQ MOUNTED PC BOARD **********			
	4-067-815-01	SHEET (EBQH), INSULATOR			
	4-382-854-11	SCREW (M3X10), P, SW (+)			
	7-682-651-09	SCREW +PS 3X14			
	<CAPACITOR>				
C100	1-126-968-11	ELECT	100µF	20%	50V
C101	1-126-968-11	ELECT	100µF	20%	50V
C102	1-107-906-11	ELECT	10µF	20%	50V
C103	1-107-906-11	ELECT	10µF	20%	50V
C104	1-124-242-00	ELECT	33µF	20%	25V
C105	1-101-004-00	CERAMIC	0.01µF		50V
C200	1-102-973-00	CERAMIC	100PF	5%	50V
C201	1-102-973-00	CERAMIC	100PF	5%	50V
C202	1-102-973-00	CERAMIC	100PF	5%	50V
C203	1-102-973-00	CERAMIC	100PF	5%	50V
C204	1-101-004-00	CERAMIC	0.01µF		50V
C205	1-101-004-00	CERAMIC	0.01µF		50V
C206	1-126-968-11	ELECT	100µF	20%	50V
C207	1-126-968-11	ELECT	100µF	20%	50V
C208	1-102-973-00	CERAMIC	100PF	5%	50V
C209	1-102-973-00	CERAMIC	100PF	5%	50V
C210	1-101-004-00	CERAMIC	0.01µF		50V
C211	1-101-004-00	CERAMIC	0.01µF		50V
C212	1-126-968-11	ELECT	100µF	20%	50V
C213	1-126-968-11	ELECT	100µF	20%	50V
C300	1-102-973-00	CERAMIC	100PF	5%	50V
C301	1-102-973-00	CERAMIC	100PF	5%	50V
C302	1-102-973-00	CERAMIC	100PF	5%	50V
C303	1-102-973-00	CERAMIC	100PF	5%	50V
C304	1-101-004-00	CERAMIC	0.01µF		50V
C305	1-101-004-00	CERAMIC	0.01µF		50V
C306	1-126-968-11	ELECT	100µF	20%	50V
C307	1-126-968-11	ELECT	100µF	20%	50V
C308	1-102-973-00	CERAMIC	100PF	5%	50V
C309	1-102-973-00	CERAMIC	100PF	5%	50V
C310	1-101-004-00	CERAMIC	0.01µF		50V
C311	1-101-004-00	CERAMIC	0.01µF		50V
C312	1-126-968-11	ELECT	100µF	20%	50V
C313	1-126-968-11	ELECT	100µF	20%	50V
	<CONNECTOR>				
CN130	* 1-564-711-11	PIN, CONNECTOR (SMALL TYPE) 9P			
CN131	* 1-564-714-11	PIN, CONNECTOR (SMALL TYPE)12P			
CN132	* 1-564-507-11	PLUG, CONNECTOR 4P			
CN133	* 1-564-507-11	PLUG, CONNECTOR 4P			
CN134	* 1-564-507-11	PLUG, CONNECTOR 4P			
	<DIODE>				
D100	8-719-911-19	DIODE 1SS119-25			
D101	8-719-911-19	DIODE 1SS119-25			
D102	8-719-911-19	DIODE 1SS119-25			
	<IC>				
IC100	8-759-103-93	IC UPC393C			
IC200	8-749-924-98	IC STK392-040			
IC300	8-749-924-98	IC STK392-040			
	<COIL>				
L100	1-406-663-21	INDUCTOR 47µH			
L101	1-406-663-21	INDUCTOR 47µH			
	<TRANSISTOR>				
Q100	8-729-207-89	TRANSISTOR 2SA1358-Y			
Q101	8-729-207-82	TRANSISTOR 2SC3421-Y			
Q102	8-729-030-02	TRANSISTOR DTC144ESA			
	<RESISTOR>				
R100	1-249-413-11	CARBON	470	5%	1/4W
R101	1-247-863-91	CARBON	22K	5%	1/4W
R102	1-249-429-11	CARBON	10K	5%	1/4W
R103	1-249-436-11	CARBON	39K	5%	1/4W
R104	1-249-413-11	CARBON	470	5%	1/4W
R105	1-216-367-11	METAL OXIDE	0.68	5%	2W F
R106	1-249-429-11	CARBON	10K	5%	1/4W
R107	1-249-429-11	CARBON	10K	5%	1/4W
R108	1-216-367-11	METAL OXIDE	0.68	5%	2W F
R109	1-249-435-11	CARBON	33K	5%	1/4W
R110	1-249-435-11	CARBON	33K	5%	1/4W
R111	1-249-435-11	CARBON	33K	5%	1/4W
R112	1-249-437-11	CARBON	47K	5%	1/4W
R113	1-249-417-11	CARBON	1K	5%	1/4W
R114	1-247-807-31	CARBON	100	5%	1/4W

EBQ EBH

Ref.No.	Part No.	Description				Remark
R200	1-249-415-11	CARBON	680	5%	1/4W	
R201	1-249-411-11	CARBON	330	5%	1/4W	
R202	1-249-415-11	CARBON	680	5%	1/4W	
R203	1-249-411-11	CARBON	330	5%	1/4W	
R204	1-249-415-11	CARBON	680	5%	1/4W	
R205	1-249-411-11	CARBON	330	5%	1/4W	
R206	1-215-433-00	METAL	3.3K	1%	1/4W	
R207	1-215-433-00	METAL	3.3K	1%	1/4W	
R208	1-249-405-11	CARBON	100	5%	1/4W	F
R209	1-249-405-11	CARBON	100	5%	1/4W	F
R210	1-216-392-11	METAL OXIDE	1.8	5%	3W	F
R211	1-215-433-00	METAL	3.3K	1%	1/4W	
R212	1-216-392-11	METAL OXIDE	1.8	5%	3W	F
R213	1-216-392-11	METAL OXIDE	1.8	5%	3W	F
R214	1-215-911-11	METAL OXIDE	100	5%	3W	F
R215	1-215-911-11	METAL OXIDE	100	5%	3W	F
R216	1-215-911-11	METAL OXIDE	100	5%	3W	F
R300	1-249-415-11	CARBON	680	5%	1/4W	
R301	1-249-411-11	CARBON	330	5%	1/4W	
R302	1-249-415-11	CARBON	680	5%	1/4W	
R303	1-249-411-11	CARBON	330	5%	1/4W	
R304	1-249-415-11	CARBON	680	5%	1/4W	
R305	1-249-411-11	CARBON	330	5%	1/4W	
R306	1-215-433-00	METAL	3.3K	1%	1/4W	
R307	1-215-433-00	METAL	3.3K	1%	1/4W	
R308	1-249-405-11	CARBON	100	5%	1/4W	F
R309	1-249-405-11	CARBON	100	5%	1/4W	F
R310	1-216-392-11	METAL OXIDE	1.8	5%	3W	F
R311	1-215-433-00	METAL	3.3K	1%	1/4W	
R312	1-216-392-11	METAL OXIDE	1.8	5%	3W	F
R313	1-216-392-11	METAL OXIDE	1.8	5%	3W	F
R314	1-215-911-11	METAL OXIDE	100	5%	3W	F
R315	1-215-911-11	METAL OXIDE	100	5%	3W	F
R316	1-215-911-11	METAL OXIDE	100	5%	3W	F

****

* A-1343-563-A EBH MOUNTED PC BOARD
****

4-067-815-01 SHEET (EBQH), INSULATOR
4-382-854-11 SCREW (M3X10), P, SW (+)
7-682-651-09 SCREW +PS 3X14

<CAPACITOR>

Ref.No.	Part No.	Description				Remark
C500	1-126-968-11	ELECT	100μF	20%	50V	
C501	1-126-968-11	ELECT	100μF	20%	50V	
C502	1-107-906-11	ELECT	10μF	20%	50V	
C503	1-107-906-11	ELECT	10μF	20%	50V	
C504	1-124-242-00	ELECT	33μF	20%	25V	
C505	1-101-004-00	CERAMIC	0.01μF		50V	
C600	1-102-973-00	CERAMIC	100PF	5%	50V	
C601	1-102-973-00	CERAMIC	100PF	5%	50V	
C602	1-102-973-00	CERAMIC	100PF	5%	50V	
C603	1-102-973-00	CERAMIC	100PF	5%	50V	
C604	1-101-004-00	CERAMIC	0.01μF		50V	
C605	1-101-004-00	CERAMIC	0.01μF		50V	
C606	1-126-968-11	ELECT	100μF	20%	50V	
C607	1-126-968-11	ELECT	100μF	20%	50V	
C608	1-102-973-00	CERAMIC	100PF	5%	50V	
C609	1-102-973-00	CERAMIC	100PF	5%	50V	
C610	1-101-004-00	CERAMIC	0.01μF		50V	
C611	1-101-004-00	CERAMIC	0.01μF		50V	
C612	1-126-968-11	ELECT	100μF	20%	50V	
C613	1-126-968-11	ELECT	100μF	20%	50V	
C700	1-102-973-00	CERAMIC	100PF	5%	50V	
C701	1-102-973-00	CERAMIC	100PF	5%	50V	
C702	1-102-973-00	CERAMIC	100PF	5%	50V	
C703	1-102-973-00	CERAMIC	100PF	5%	50V	
C704	1-101-004-00	CERAMIC	0.01μF		50V	
C705	1-101-004-00	CERAMIC	0.01μF		50V	
C706	1-126-968-11	ELECT	100μF	20%	50V	
C707	1-126-968-11	ELECT	100μF	20%	50V	
C708	1-102-973-00	CERAMIC	100PF	5%	50V	
C709	1-102-973-00	CERAMIC	100PF	5%	50V	
C710	1-101-004-00	CERAMIC	0.01μF		50V	
C711	1-101-004-00	CERAMIC	0.01μF		50V	
C712	1-126-968-11	ELECT	100μF	20%	50V	
C713	1-126-968-11	ELECT	100μF	20%	50V	

<CONNECTOR>

Ref.No.	Part No.	Description
CN135	* 1-564-711-11	PIN, CONNECTOR (SMALL TYPE) 9P
CN136	* 1-564-714-11	PIN, CONNECTOR (SMALL TYPE)12P
CN137	* 1-564-507-11	PLUG, CONNECTOR 4P
CN138	* 1-564-507-11	PLUG, CONNECTOR 4P
CN139	* 1-564-507-11	PLUG, CONNECTOR 4P

<DIODE>

Ref.No.	Part No.	Description
D500	8-719-911-19	DIODE 1SS119-25
D501	8-719-911-19	DIODE 1SS119-25
D502	8-719-911-19	DIODE 1SS119-25

<IC>

Ref.No.	Part No.	Description
IC500	8-759-103-93	IC UPC393C
IC600	8-749-924-98	IC STK392-040
IC700	8-749-924-98	IC STK392-040

<COIL>

Ref.No.	Part No.	Description
L500	1-406-663-21	INDUCTOR 47μH
L501	1-406-663-21	INDUCTOR 47μH

<TRANSISTOR>

Ref.No.	Part No.	Description
Q500	8-729-207-89	TRANSISTOR 2SA1358-Y
Q501	8-729-207-82	TRANSISTOR 2SC3421-Y
Q502	8-729-030-02	TRANSISTOR DTC144ESA

<RESISTOR>

Ref.No.	Part No.	Description				Remark
R500	1-249-413-11	CARBON	470	5%	1/4W	
R501	1-247-863-91	CARBON	22K	5%	1/4W	
R502	1-249-429-11	CARBON	10K	5%	1/4W	
R503	1-249-436-11	CARBON	39K	5%	1/4W	
R504	1-249-413-11	CARBON	470	5%	1/4W	

Ref.No.	Part No.	Description				Remark
R505	1-216-367-11	METAL OXIDE	0.68	5%	2W	F
R506	1-249-429-11	CARBON	10K	5%	1/4W	
R507	1-249-429-11	CARBON	10K	5%	1/4W	
R508	1-216-367-11	METAL OXIDE	0.68	5%	2W	F
R509	1-249-435-11	CARBON	33K	5%	1/4W	
R510	1-249-435-11	CARBON	33K	5%	1/4W	
R511	1-249-435-11	CARBON	33K	5%	1/4W	
R512	1-249-437-11	CARBON	47K	5%	1/4W	
R513	1-249-417-11	CARBON	1K	5%	1/4W	
R514	1-247-807-31	CARBON	100	5%	1/4W	
R600	1-249-415-11	CARBON	680	5%	1/4W	
R601	1-249-411-11	CARBON	330	5%	1/4W	
R602	1-249-415-11	CARBON	680	5%	1/4W	
R603	1-249-411-11	CARBON	330	5%	1/4W	
R604	1-249-415-11	CARBON	680	5%	1/4W	
R605	1-249-411-11	CARBON	330	5%	1/4W	
R606	1-215-433-00	METAL	3.3K	1%	1/4W	
R607	1-215-433-00	METAL	3.3K	1%	1/4W	
R608	1-249-405-11	CARBON	100	5%	1/4W	F
R609	1-249-405-11	CARBON	100	5%	1/4W	F
R610	1-216-392-11	METAL OXIDE	1.8	5%	3W	F
R611	1-215-433-00	METAL	3.3K	1%	1/4W	
R612	1-216-392-11	METAL OXIDE	1.8	5%	3W	F
R613	1-216-392-11	METAL OXIDE	1.8	5%	3W	F
R614	1-215-911-11	METAL OXIDE	100	5%	3W	F
R615	1-215-911-11	METAL OXIDE	100	5%	3W	F
R616	1-215-911-11	METAL OXIDE	100	5%	3W	F
R700	1-249-415-11	CARBON	680	5%	1/4W	
R701	1-249-411-11	CARBON	330	5%	1/4W	
R702	1-249-415-11	CARBON	680	5%	1/4W	
R703	1-249-411-11	CARBON	330	5%	1/4W	
R704	1-249-415-11	CARBON	680	5%	1/4W	
R705	1-249-411-11	CARBON	330	5%	1/4W	
R706	1-215-433-00	METAL	3.3K	1%	1/4W	
R707	1-215-433-00	METAL	3.3K	1%	1/4W	
R708	1-249-405-11	CARBON	100	5%	1/4W	F
R709	1-249-405-11	CARBON	100	5%	1/4W	F
R710	1-216-392-11	METAL OXIDE	1.8	5%	3W	F
R711	1-215-433-00	METAL	3.3K	1%	1/4W	
R712	1-216-392-11	METAL OXIDE	1.8	5%	3W	F
R713	1-216-392-11	METAL OXIDE	1.8	5%	3W	F
R714	1-215-911-11	METAL OXIDE	100	5%	3W	F
R715	1-215-911-11	METAL OXIDE	100	5%	3W	F
R716	1-215-911-11	METAL OXIDE	100	5%	3W	F

****

* A-1346-771-A ED COMPLETE PC BOARD
(Include EA Mounted PC BOARD)
****

3-701-809-31 SCREW, TERMINAL (M3X8)
* 4-067-829-01 HOLDER (EDA), TR
* 4-067-830-01 HOLDER (EDB), TR

<CAPACITOR>

Ref.No.	Part No.	Description				Remark
C1	1-163-031-11	CERAMIC CHIP	0.01μF		50V	
C2	1-163-031-11	CERAMIC CHIP	0.01μF		50V	
C3	1-163-133-00	CERAMIC CHIP	470PF	5%	50V	
C4	1-126-964-11	ELECT	10μF	20%	50V	
C5	1-126-964-11	ELECT	10μF	20%	50V	
C6	1-126-960-11	ELECT	1μF	20%	50V	
C7	1-107-713-11	ELECT	4.7μF	20%	50V	
C8	1-163-251-11	CERAMIC CHIP	100PF	5%	50V	
C9	1-136-165-00	FILM	0.1μF	5%	50V	
C10	1-136-165-00	FILM	0.1μF	5%	50V	
C11	1-109-889-11	ELECT	1μF	20%	50V	
C12	1-136-159-00	FILM	0.033μF	5%	50V	
C13	1-126-933-11	ELECT	100μF	20%	16V	
C14	1-126-966-11	ELECT	33μF	20%	16V	
C15	1-126-966-11	ELECT	33μF	20%	16V	
C16	1-136-165-00	FILM	0.1μF	5%	50V	
C17	1-126-966-11	ELECT	33μF	20%	16V	
C18	1-126-933-11	ELECT	100μF	20%	16V	
C19	1-136-153-00	FILM	0.01μF	5%	50V	
C20	1-130-471-00	FILM	0.001μF	5%	50V	
C21	1-126-964-11	ELECT	10μF	20%	50V	
C22	1-136-153-00	FILM	0.01μF	5%	50V	
C23	1-136-153-00	FILM	0.01μF	5%	50V	
C24	1-126-960-11	ELECT	1μF	20%	50V	
C25	1-136-165-00	FILM	0.1μF	5%	50V	
C26	1-126-960-11	ELECT	1μF	20%	50V	
C27	1-126-960-11	ELECT	1μF	20%	50V	
C29	1-126-960-11	ELECT	1μF	20%	50V	
C30	1-136-153-00	FILM	0.01μF	5%	50V	
C31	1-126-964-11	ELECT	10μF	20%	50V	
C32	1-126-964-11	ELECT	10μF	20%	50V	
C34	1-126-964-11	ELECT	10μF	20%	50V	
C35	1-126-966-11	ELECT	33μF	20%	16V	
C38	1-130-471-00	FILM	0.001μF	5%	50V	
C39	1-136-165-00	FILM	0.1μF	5%	50V	
C40	1-136-165-00	FILM	0.1μF	5%	50V	
C41	1-163-133-00	CERAMIC CHIP	470PF	5%	50V	
C1001	1-104-665-11	ELECT	100μF	20%	25V	
C1002	1-128-578-11	ELECT	1μF	20%	100V	
C1003	1-126-933-11	ELECT	100μF	20%	16V	
C1004	1-128-582-11	ELECT	10μF	20%	100V	
C1005	1-128-578-11	ELECT	1μF	20%	100V	
C1006	1-128-582-11	ELECT	10μF	20%	100V	
C1007	1-126-933-11	ELECT	100μF	20%	16V	
C1008	1-104-665-11	ELECT	100μF	20%	25V	
C1009	1-104-965-11	ELECT	10μF	0	160V	
C1010	1-136-111-00	FILM	1μF	5%	200V	
C1011	1-107-746-11	ELECT	10μF	20%	200V	
C1012	1-136-157-00	FILM	0.022μF	5%	50V	
C1013	1-136-111-00	FILM	1μF	5%	200V	
C1014	1-126-960-11	ELECT	1μF	20%	50V	
C1026	1-136-153-00	FILM	0.01μF	5%	50V	
C1027	1-163-133-00	CERAMIC CHIP	470PF	5%	50V	
C1028	1-163-133-00	CERAMIC CHIP	470PF	5%	50V	
C1033	1-136-153-00	FILM	0.01μF	5%	50V	
C1036	1-163-133-00	CERAMIC CHIP	470PF	5%	50V	
C1037	1-163-133-00	CERAMIC CHIP	470PF	5%	50V	
C1041	1-136-153-00	FILM	0.01μF	5%	50V	
C1042	1-163-133-00	CERAMIC CHIP	470PF	5%	50V	
C1043	1-163-133-00	CERAMIC CHIP	470PF	5%	50V	

ED

Ref.No.	Part No.	Description	Remark
C1047	1-128-563-11	ELECT 100µF 20%	100V
C1048	1-128-563-11	ELECT 100µF 20%	100V
C1049	1-136-153-00	FILM 0.01µF 5%	50V
		<CONNECTOR>	
CN750	* 1-785-517-11	CONNECTOR, BOARD TO BOARD 13P	
CN751	* 1-785-517-11	CONNECTOR, BOARD TO BOARD 13P	
CN752	* 1-785-518-11	CONNECTOR, BOARD TO BOARD 15P	
CN753	* 1-785-518-11	CONNECTOR, BOARD TO BOARD 15P	
CN754	* 1-564-713-11	PIN, CONNECTOR (SMALL TYPE)11P	
CN755	* 1-564-513-11	PLUG, CONNECTOR 10P	
CN756	* 1-564-709-11	PIN, CONNECTOR (SMALL TYPE) 7P	
CN758	* 1-785-530-11	PIN, CONNECTOR (PC BOARD) 10P	
CN759	* 1-785-519-11	PIN, CONNECTOR (PC BOARD) 24P	
		<DIODE>	
D1	8-719-801-78	DIODE 1SS184	
D2	8-719-801-78	DIODE 1SS184	
D3	8-719-801-78	DIODE 1SS184	
D4	8-719-801-78	DIODE 1SS184	
D5	8-719-801-78	DIODE 1SS184	
D6	8-719-948-45	DIODE ERA22-08	
D7	8-719-801-78	DIODE 1SS184	
D8	8-719-801-78	DIODE 1SS184	
D9	8-719-801-78	DIODE 1SS184	
D10	8-719-801-78	DIODE 1SS184	
D11	8-719-801-78	DIODE 1SS184	
D12	8-719-948-45	DIODE ERA22-08	
D13	8-719-801-78	DIODE 1SS184	
D1001	8-719-948-45	DIODE ERA22-08	
D1002	8-719-948-45	DIODE ERA22-08	
D1003	8-719-948-45	DIODE ERA22-08	
D1004	8-719-948-45	DIODE ERA22-08	
D1005	8-719-911-19	DIODE 1SS119-25	
D1006	8-719-911-19	DIODE 1SS119-25	
D1007	8-719-911-19	DIODE 1SS119-25	
D1008	8-719-300-80	DIODE RU-1C	
D1009	8-719-300-80	DIODE RU-1C	
D1010	8-719-300-80	DIODE RU-1C	
D1011	8-719-948-45	DIODE ERA22-08	
D1012	8-719-911-19	DIODE 1SS119-25	
D1013	8-719-911-19	DIODE 1SS119-25	
D1014	8-719-300-80	DIODE RU-1C	
D1015	8-719-911-19	DIODE 1SS119-25	
D1016	8-719-911-19	DIODE 1SS119-25	
D1017	8-719-110-72	DIODE RD30ESB2	
D1018	8-719-110-72	DIODE RD30ESB2	
		<FERRITE BEAD>	
FB1000	1-410-396-41	FERRITE 0.45µH	
		<IC>	
IC1	8-759-100-96	IC UPC4558G2	
IC2	8-759-433-43	IC MC1495BP	
IC3	8-759-442-21	IC MC1436CP1	
IC4	8-759-100-96	IC UPC4558G2	
IC5	8-759-381-53	IC UPC814G2-E2	
IC6	8-759-300-78	IC HD14538BFP	
IC7	8-759-100-96	IC UPC4558G2	
IC8	8-759-100-96	IC UPC4558G2	
IC9	8-759-100-93	IC UPC393G2	
IC12	8-759-100-93	IC UPC393G2	
IC1001	8-759-231-58	IC TA7812S	
IC1002	8-759-929-65	IC LM7912CT	
IC1010	8-759-100-96	IC UPC4558G2	
IC1011	8-759-100-96	IC UPC4558G2	
IC1013	8-759-100-96	IC UPC4558G2	
IC1014	8-759-100-96	IC UPC4558G2	
		<COIL>	
L1	1-410-067-21	INDUCTOR 4.7mH	
L1001	1-412-533-21	INDUCTOR 47µH	
L1002	1-412-533-21	INDUCTOR 47µH	
L1003	1-412-533-21	INDUCTOR 47µH	
L1004	1-412-533-21	INDUCTOR 47µH	
L1005	1-459-104-00	COIL, DUST CORE	
L1006	1-459-104-00	COIL, DUST CORE	
L1007	1-410-680-31	INDUCTOR 330µH	
		<TRANSISTOR>	
Q1	8-729-230-49	TRANSISTOR 2SC2712-YG	
Q2	8-729-216-22	TRANSISTOR 2SA1162-G	
Q3	8-729-116-05	TRANSISTOR 2SK160-K5	
Q4	8-729-230-49	TRANSISTOR 2SC2712-YG	
Q5	1-801-806-11	TRANSISTOR DTC144EKA-T146	
Q6	8-729-216-22	TRANSISTOR 2SA1162-G	
Q7	8-729-116-05	TRANSISTOR 2SK160-K5	
Q8	8-729-230-49	TRANSISTOR 2SC2712-YG	
Q9	8-729-230-49	TRANSISTOR 2SC2712-YG	
Q10	8-729-216-22	TRANSISTOR 2SA1162-G	
Q11	8-729-230-49	TRANSISTOR 2SC2712-YG	
Q12	8-729-216-22	TRANSISTOR 2SA1162-G	
Q13	8-729-216-22	TRANSISTOR 2SA1162-G	
Q14	1-801-806-11	TRANSISTOR DTC144EKA-T146	
Q15	8-729-119-80	TRANSISTOR 2SC2688-LK	
Q16	8-729-230-49	TRANSISTOR 2SC2712-YG	
Q17	8-729-230-49	TRANSISTOR 2SC2712-YG	
Q18	8-729-230-49	TRANSISTOR 2SC2712-YG	
Q19	8-729-216-22	TRANSISTOR 2SA1162-G	
Q20	8-729-230-49	TRANSISTOR 2SC2712-YG	
Q21	8-729-230-49	TRANSISTOR 2SC2712-YG	
Q22	8-729-216-22	TRANSISTOR 2SA1162-G	
Q1001	8-729-140-96	TRANSISTOR 2SD774-34	
Q1003	8-729-140-97	TRANSISTOR 2SB734-34	
Q1007	8-729-119-80	TRANSISTOR 2SC2688-LK	
Q1009	8-729-119-80	TRANSISTOR 2SC2688-LK	
Q1010	8-729-905-86	TRANSISTOR 2SC4054N	
Q1011	8-729-143-42	TRANSISTOR 2SK929	
Q1012	8-729-905-86	TRANSISTOR 2SC4054N	
Q1013	8-729-402-03	TRANSISTOR 2SK755	
Q1014	8-729-802-71	TRANSISTOR 2SA1407-D	

Ref.No.	Part No.	Description			Remark
	<RESISTOR>				
R1	1-216-659-11	METAL CHIP	2.2K	0.50%	1/10W
R2	1-216-659-11	METAL CHIP	2.2K	0.50%	1/10W
R3	1-216-699-11	METAL CHIP	100K	0.50%	1/10W
R4	1-216-659-11	METAL CHIP	2.2K	0.50%	1/10W
R5	1-216-659-11	METAL CHIP	2.2K	0.50%	1/10W
R6	1-216-049-91	RES,CHIP	1K	5%	1/10W
R7	1-216-049-91	RES,CHIP	1K	5%	1/10W
R8	1-216-697-91	METAL CHIP	82K	0.50%	1/10W
R10	1-216-687-11	METAL CHIP	33K	0.50%	1/10W
R11	1-216-663-11	METAL CHIP	3.3K	0.50%	1/10W
R12	1-216-061-00	RES,CHIP	3.3K	5%	1/10W
R13	1-216-663-11	METAL CHIP	3.3K	0.50%	1/10W
R14	1-216-651-11	METAL CHIP	1K	0.50%	1/10W
R15	1-216-675-11	METAL CHIP	10K	0.50%	1/10W
R16	1-216-061-00	RES,CHIP	3.3K	5%	1/10W
R17	1-216-073-00	RES,CHIP	10K	5%	1/10W
R18	1-216-675-11	METAL CHIP	10K	0.50%	1/10W
R19	1-216-073-00	RES,CHIP	10K	5%	1/10W
R20	1-216-687-11	METAL CHIP	33K	0.50%	1/10W
R21	1-216-675-11	METAL CHIP	10K	0.50%	1/10W
R22	1-216-677-11	METAL CHIP	12K	0.50%	1/10W
R23	1-216-679-11	METAL CHIP	15K	0.50%	1/10W
R24	1-216-663-11	METAL CHIP	3.3K	0.50%	1/10W
R25	1-216-065-91	RES,CHIP	4.7K	5%	1/10W
R26	1-216-685-11	METAL CHIP	27K	0.50%	1/10W
R27	1-216-089-91	RES,CHIP	47K	5%	1/10W
R28	1-216-073-00	RES,CHIP	10K	5%	1/10W
R29	1-216-073-00	RES,CHIP	10K	5%	1/10W
R30	1-216-121-91	RES,CHIP	1M	5%	1/10W
R31	1-216-061-00	RES,CHIP	3.3K	5%	1/10W
R32	1-216-073-00	RES,CHIP	10K	5%	1/10W
R33	1-216-049-91	RES,CHIP	1K	5%	1/10W
R34	1-216-677-11	METAL CHIP	12K	0.50%	1/10W
R35	1-216-677-11	METAL CHIP	12K	0.50%	1/10W
R36	1-216-691-11	METAL CHIP	47K	0.50%	1/10W
R37	1-216-061-00	RES,CHIP	3.3K	5%	1/10W
R38	1-216-101-00	RES,CHIP	150K	5%	1/10W
R39	1-216-057-00	RES,CHIP	2.2K	5%	1/10W
R40	1-216-061-00	RES,CHIP	3.3K	5%	1/10W
R41	1-216-065-91	RES,CHIP	4.7K	5%	1/10W
R42	1-216-081-00	RES,CHIP	22K	5%	1/10W
R43	1-216-057-00	RES,CHIP	2.2K	5%	1/10W
R44	1-216-073-00	RES,CHIP	10K	5%	1/10W
R45	1-216-055-00	RES,CHIP	1.8K	5%	1/10W
R46	1-216-677-11	METAL CHIP	12K	0.50%	1/10W
R47	1-216-675-11	METAL CHIP	10K	0.50%	1/10W
R48	1-216-061-00	RES,CHIP	3.3K	5%	1/10W
R49	1-216-065-91	RES,CHIP	4.7K	5%	1/10W
R50	1-216-049-91	RES,CHIP	1K	5%	1/10W
R51	1-216-061-00	RES,CHIP	3.3K	5%	1/10W
R52	1-216-057-00	RES,CHIP	2.2K	5%	1/10W
R53	1-216-675-11	METAL CHIP	10K	0.50%	1/10W
R54	1-216-675-11	METAL CHIP	10K	0.50%	1/10W
R55	1-216-675-11	METAL CHIP	10K	0.50%	1/10W
R56	1-216-675-11	METAL CHIP	10K	0.50%	1/10W
R57	1-216-681-11	METAL CHIP	18K	0.50%	1/10W
R58	1-216-691-11	METAL CHIP	47K	0.50%	1/10W
R59	1-216-699-11	METAL CHIP	100K	0.50%	1/10W
R60	1-216-675-11	METAL CHIP	10K	0.50%	1/10W
R61	1-216-065-91	RES,CHIP	4.7K	5%	1/10W
R62	1-216-687-11	METAL CHIP	33K	0.50%	1/10W
R63	1-216-049-91	RES,CHIP	1K	5%	1/10W
R64	1-216-065-91	RES,CHIP	4.7K	5%	1/10W
R65	1-216-675-11	METAL CHIP	10K	0.50%	1/10W
R66	1-216-089-91	RES,CHIP	47K	5%	1/10W
R67	1-216-097-91	RES,CHIP	100K	5%	1/10W
R68	1-216-057-00	RES,CHIP	2.2K	5%	1/10W
R69	1-216-675-11	METAL CHIP	10K	0.50%	1/10W
R70	1-216-049-91	RES,CHIP	1K	5%	1/10W
R71	1-216-049-91	RES,CHIP	1K	5%	1/10W
R72	1-216-665-11	METAL CHIP	3.9K	0.50%	1/10W
R73	1-216-663-11	METAL CHIP	3.3K	0.50%	1/10W
R74	1-216-073-00	RES,CHIP	10K	5%	1/10W
R75	1-216-025-91	RES,CHIP	100	5%	1/10W
R76	1-216-025-91	RES,CHIP	100	5%	1/10W
R77	1-216-049-91	RES,CHIP	1K	5%	1/10W
R79	1-216-025-91	RES,CHIP	100	5%	1/10W
R81	1-216-065-91	RES,CHIP	4.7K	5%	1/10W
R88	1-216-061-00	RES,CHIP	3.3K	5%	1/10W
R89	1-216-097-91	RES,CHIP	100K	5%	1/10W
R90	1-216-699-11	METAL CHIP	100K	0.50%	1/10W
R91	1-216-061-00	RES,CHIP	3.3K	5%	1/10W
R92	1-216-675-11	METAL CHIP	10K	0.50%	1/10W
R93	1-216-025-91	RES,CHIP	100	5%	1/10W
R94	1-216-097-91	RES,CHIP	100K	5%	1/10W
R96	1-216-675-11	METAL CHIP	10K	0.50%	1/10W
R97	1-216-049-91	RES,CHIP	1K	5%	1/10W
R98	1-216-685-11	METAL CHIP	27K	0.50%	1/10W
R100	1-216-097-91	RES,CHIP	100K	5%	1/10W
R103	1-216-097-91	RES,CHIP	100K	5%	1/10W
R104	1-216-049-91	RES,CHIP	1K	5%	1/10W
R105	1-216-669-11	METAL CHIP	5.6K	0.50%	1/10W
R107	1-216-105-91	RES,CHIP	220K	5%	1/10W
R108	1-216-089-91	RES,CHIP	47K	5%	1/10W
R109	1-216-049-91	RES,CHIP	1K	5%	1/10W
R110	1-216-049-91	RES,CHIP	1K	5%	1/10W
R113	1-216-013-00	RES,CHIP	33	5%	1/10W
R114	1-216-089-91	RES,CHIP	47K	5%	1/10W
R115	1-216-651-11	METAL CHIP	1K	0.50%	1/10W
R116	1-216-665-11	METAL CHIP	3.9K	0.50%	1/10W
R117	1-216-073-00	RES,CHIP	10K	5%	1/10W
R118	1-216-089-91	RES,CHIP	47K	5%	1/10W
R119	1-216-691-11	METAL CHIP	47K	0.50%	1/10W
R120	1-216-057-00	RES,CHIP	2.2K	5%	1/10W
R121	1-216-065-91	RES,CHIP	4.7K	5%	1/10W
R122	1-216-089-91	RES,CHIP	47K	5%	1/10W
R123	1-216-665-11	METAL CHIP	3.9K	0.50%	1/10W
R124	1-216-025-91	RES,CHIP	100	5%	1/10W
R125	1-216-025-91	RES,CHIP	100	5%	1/10W
R126	1-216-025-91	RES,CHIP	100	5%	1/10W
R127	1-216-115-00	RES,CHIP	560K	5%	1/10W
R1002	1-260-296-11	CARBON	2.2	5%	1/2W
R1003	1-249-434-11	CARBON	27K	5%	1/4W
R1004	1-247-863-91	CARBON	22K	5%	1/4W
R1006	1-260-296-11	CARBON	2.2	5%	1/2W

ED E

Ref.No.	Part No.	Description				Remark
R1007	1-249-434-11	CARBON	27K	5%	1/4W	
R1011	1-247-863-91	CARBON	22K	5%	1/4W	
R1021	1-260-298-51	CARBON	3.3	5%	1/2W	
R1022	1-215-878-00	METAL OXIDE	33K	5%	1W	F
R1023	1-215-924-00	METAL OXIDE	15K	5%	3W	F
R1026	1-215-924-00	METAL OXIDE	15K	5%	3W	F
R1027	1-215-383-00	METAL	27	1%	1/4W	
R1030	1-215-924-00	METAL OXIDE	15K	5%	3W	F
R1031	1-215-383-00	METAL	27	1%	1/4W	
R1032	1-215-421-00	METAL	1K	1%	1/4W	
R1033	1-215-383-00	METAL	27	1%	1/4W	
R1036	1-247-807-31	CARBON	100	5%	1/4W	
R1037	1-247-807-31	CARBON	100	5%	1/4W	
R1038	1-249-429-11	CARBON	10K	5%	1/4W	
R1039	1-260-298-51	CARBON	3.3	5%	1/2W	
R1040	1-249-429-11	CARBON	10K	5%	1/4W	
R1041	1-249-441-11	CARBON	100K	5%	1/4W	
R1042	1-215-413-00	METAL	470	1%	1/4W	
R1043	1-215-387-00	METAL	39	1%	1/4W	
R1060	1-216-073-00	RES,CHIP	10K	5%	1/10W	
R1078	1-216-049-91	RES,CHIP	1K	5%	1/10W	
R1080	1-216-073-00	RES,CHIP	10K	5%	1/10W	
R1081	1-216-053-00	RES,CHIP	1.5K	5%	1/10W	
R1082	1-216-049-91	RES,CHIP	1K	5%	1/10W	
R1083	1-216-053-00	RES,CHIP	1.5K	5%	1/10W	
R1084	1-216-073-00	RES,CHIP	10K	5%	1/10W	
R1085	1-216-073-00	RES,CHIP	10K	5%	1/10W	
R1086	1-216-073-00	RES,CHIP	10K	5%	1/10W	
R1087	1-216-049-91	RES,CHIP	1K	5%	1/10W	
R1088	1-216-053-00	RES,CHIP	1.5K	5%	1/10W	
R1093	1-249-425-11	CARBON	4.7K	5%	1/4W	
R1094	1-249-425-11	CARBON	4.7K	5%	1/4W	
R1095	1-216-073-00	RES,CHIP	10K	5%	1/10W	
R1099	1-216-049-91	RES,CHIP	1K	5%	1/10W	
R1101	1-216-073-00	RES,CHIP	10K	5%	1/10W	
R1102	1-216-073-00	RES,CHIP	10K	5%	1/10W	
R1103	1-216-049-91	RES,CHIP	1K	5%	1/10W	
R1111	1-216-073-00	RES,CHIP	10K	5%	1/10W	
R1112	1-216-073-00	RES,CHIP	10K	5%	1/10W	
R1124	1-216-049-91	RES,CHIP	1K	5%	1/10W	
R1125	1-216-073-00	RES,CHIP	10K	5%	1/10W	
R1126	1-216-049-91	RES,CHIP	1K	5%	1/10W	
R1127	1-216-073-00	RES,CHIP	10K	5%	1/10W	
R1128	1-216-073-00	RES,CHIP	10K	5%	1/10W	
R1129	1-216-073-00	RES,CHIP	10K	5%	1/10W	
R1130	1-216-073-00	RES,CHIP	10K	5%	1/10W	
R1131	1-216-073-00	RES,CHIP	10K	5%	1/10W	
R1132	1-216-073-00	RES,CHIP	10K	5%	1/10W	
R1133	1-216-073-00	RES,CHIP	10K	5%	1/10W	
R1134	1-216-065-91	RES,CHIP	4.7K	5%	1/10W	
R1135	1-216-049-91	RES,CHIP	1K	5%	1/10W	

<VARIABLE RESISTOR>

RV1	1-238-791-11	RES, ADJ, CERMET 200K
RV2	1-238-790-11	RES, ADJ, CERMET 100K

Ref.No.	Part No.	Description				Remark
	<TEST PIN>					
TP1	* 1-537-864-11	PIN, POST				
TP2	* 1-537-864-11	PIN, POST				
TP3	* 1-537-864-11	PIN, POST				
TP4	* 1-537-864-11	PIN, POST				
TP5	* 1-537-864-11	PIN, POST				

****

	* A-1346-772-A	E COMPLETE PC BOARD			
		**********			
	1-923-514-14	TUBE DIA1.6 8MM BLK			
	3-701-809-31	SCREW, TERMINAL (M3X8)			
	4-056-066-01	HOLDER (C), TR			
	* 4-067-840-01	HOLDER (E), TR			
	4-382-854-11	SCREW (M3X10), P, SW (+)			
	4-393-406-01	SHEET (R), RADIATION			
	7-682-903-11	SCREW +PWH 3X6			
	<CAPACITOR>				
C1	1-126-899-11	ELECT	3900μF	20%	16V
C2	1-126-899-11	ELECT	3900μF	20%	16V
C3	1-126-899-11	ELECT	3900μF	20%	16V
C15	1-125-649-11	ELECT(BLOCK)	1500μF	20%	200V
C17	1-126-899-11	ELECT	3900μF	20%	16V
C18	1-126-899-11	ELECT	3900μF	20%	16V
C19	1-126-899-11	ELECT	3900μF	20%	16V
C20	1-162-116-00	CERAMIC	680PF	10%	2KV
C21	1-109-956-11	ELECT	1μF	20%	200V
C22	1-162-116-00	CERAMIC	680PF	10%	2KV
C23	1-127-686-11	FILM MELF	8.2μF	3%	200V
C24	1-127-686-11	FILM MELF	8.2μF	3%	200V
C25	1-127-686-11	FILM MELF	8.2μF	3%	200V
C26	1-127-686-11	FILM MELF	8.2μF	3%	200V
C27	1-127-686-11	FILM MELF	8.2μF	3%	200V
C28	1-127-686-11	FILM MELF	8.2μF	3%	200V
C29	1-127-686-11	FILM MELF	8.2μF	3%	200V
C30	1-127-686-11	FILM MELF	8.2μF	3%	200V
C31	1-127-686-11	FILM MELF	8.2μF	3%	200V
C32	1-127-686-11	FILM MELF	8.2μF	3%	200V
C33	1-127-683-11	FILM MELF	2400PF	3%	2.5KV
C35	1-107-746-11	ELECT	10μF	20%	200V
C36	1-126-969-11	ELECT	220μF	20%	50V
C37	1-101-821-00	CERAMIC	0.0022μF		500V
C38	1-137-194-81	FILM	0.47μF	5%	50V
C39	1-162-116-00	CERAMIC	680PF	10%	2KV
C40	1-102-824-00	CERAMIC	470PF	5%	50V
C41	1-137-194-81	FILM	0.47μF	5%	50V
C42	1-107-746-11	ELECT	10μF	20%	200V
C43	1-127-683-11	FILM MELF	2400PF	3%	2.5KV
C44	1-127-683-11	FILM MELF	2400PF	3%	2.5KV
C45	1-127-685-11	FILM MELF	8000PF	3%	2.5KV
C46	1-126-965-11	ELECT	22μF	20%	50V

Ref.No.	Part No.	Description	Remark
	<CONNECTOR>		
CN113	* 1-785-519-11	PIN, CONNECTOR (PC BOARD) 24P	
CN114	* 1-785-530-11	PIN, CONNECTOR (PC BOARD) 10P	
CN116	* 1-764-334-11	PLUG, CONNECTOR 11P	
CN117	* 1-785-524-11	PIN, CONNECTOR (PC BOARD) 3P	
CN118	* 1-785-514-11	PIN, CONNECTOR (PC BOARD) 6P	
CN119	* 1-785-514-11	PIN, CONNECTOR (PC BOARD) 6P	
CN120	* 1-785-514-11	PIN, CONNECTOR (PC BOARD) 6P	
CN121	* 1-564-506-11	PLUG, CONNECTOR 3P	
	<DIODE>		
D15	8-719-110-41	DIODE RD15ESB2	
D16	8-719-110-41	DIODE RD15ESB2	
D17	8-719-110-41	DIODE RD15ESB2	
D18	8-719-110-41	DIODE RD15ESB2	
D19	8-719-911-19	DIODE 1SS119-25	
D20	8-719-110-88	DIODE RD39ESB2	
D21	8-719-948-45	DIODE ERA22-08	
D22	8-719-110-41	DIODE RD15ESB2	
D23	8-719-110-41	DIODE RD15ESB2	
D24	8-719-911-19	DIODE 1SS119-25	
D25	8-719-110-41	DIODE RD15ESB2	
D26	8-719-110-72	DIODE RD30ESB2	
D27	8-719-110-72	DIODE RD30ESB2	
D28	8-719-911-19	DIODE 1SS119-25	
D29	8-719-911-19	DIODE 1SS119-25	
D30	8-719-911-19	DIODE 1SS119-25	
D31	8-719-911-19	DIODE 1SS119-25	
D32	8-719-901-19	DIODE V11N	
D33	8-719-970-89	DIODE DD50R	
D34	8-719-970-89	DIODE DD50R	
D35	8-719-920-67	DIODE ERC91-02	
D36	8-719-054-88	DIODE DFC15TR	
D37	8-719-054-88	DIODE DFC15TR	
D38	8-719-054-88	DIODE DFC15TR	
D39	8-719-054-88	DIODE DFC15TR	
D40	8-719-054-88	DIODE DFC15TR	
D41	8-719-920-67	DIODE ERC91-02	
D42	8-719-054-88	DIODE DFC15TR	
	<IC>		
IC3	8-759-442-21	IC MC1436CP1	
	<COIL>		
L8	1-406-664-21	INDUCTOR 68μH	
L9	1-406-664-21	INDUCTOR 68μH	
L10	1-416-875-11	COIL, HORIZONTAL LINEARITY	
L11	1-410-067-21	INDUCTOR 4.7mH	
L12	1-416-875-11	COIL, HORIZONTAL LINEARITY	
L13	1-410-067-21	INDUCTOR 4.7mH	
L14	1-416-875-11	COIL, HORIZONTAL LINEARITY	
	<VARIABLE COIL>		
LV1	1-416-873-11	COIL, HORIZONTAL WIZU	
LV2	1-416-873-11	COIL, HORIZONTAL WIZU	
LV3	1-416-873-11	COIL, HORIZONTAL WIZU	
	<TRANSISTOR>		
Q2	8-729-142-69	TRANSISTOR 2SK817	
Q4	8-729-140-96	TRANSISTOR 2SD774-34	
Q5	8-729-142-68	TRANSISTOR 2SJ143	
Q6	8-729-142-69	TRANSISTOR 2SK817	
Q8	8-729-142-68	TRANSISTOR 2SJ143	
Q15	8-729-142-69	TRANSISTOR 2SK817	
Q16	8-729-142-68	TRANSISTOR 2SJ143	
Q17	8-729-046-55	TRANSISTOR 2SK1452	
Q18	8-729-046-56	TRANSISTOR 2SJ413	
Q19	8-729-119-78	TRANSISTOR 2SC2785-HFE	
Q20	8-729-032-26	TRANSISTOR IRFI9620GS	
Q22	8-729-033-56	TRANSISTOR 2SC5238-CB	
Q23	8-729-033-56	TRANSISTOR 2SC5238-CB	
	<RESISTOR>		
R1	1-202-961-11	CEMENTED 1.8 5% 10W	
R2	1-260-300-11	CARBON 4.7 5% 1/2W	
R5	1-214-810-00	METAL 5.6 1% 1/2W	
R8	1-214-810-00	METAL 5.6 1% 1/2W	
R9	1-247-807-31	CARBON 100 5% 1/4W	
R10	1-214-810-00	METAL 5.6 1% 1/2W	
R12	1-247-843-11	CARBON 3.3K 5% 1/4W	
R13	1-214-810-00	METAL 5.6 1% 1/2W	
R14	1-247-807-31	CARBON 100 5% 1/4W	
R15	1-214-810-00	METAL 5.6 1% 1/2W	
R16	1-249-429-11	CARBON 10K 5% 1/4W	
R17	1-214-810-00	METAL 5.6 1% 1/2W	
R18	1-216-388-11	METAL OXIDE 0.82 5% 3W	F
R19	1-214-810-00	METAL 5.6 1% 1/2W	
R20	1-214-810-00	METAL 5.6 1% 1/2W	
R24	1-247-807-31	CARBON 100 5% 1/4W	
R25	1-214-810-00	METAL 5.6 1% 1/2W	
R28	1-214-810-00	METAL 5.6 1% 1/2W	
R29	1-247-807-31	CARBON 100 5% 1/4W	
R33	1-214-810-00	METAL 5.6 1% 1/2W	
R34	1-214-810-00	METAL 5.6 1% 1/2W	
R35	1-216-388-11	METAL OXIDE 0.82 5% 3W	F
R44	1-214-810-00	METAL 5.6 1% 1/2W	
R45	1-214-810-00	METAL 5.6 1% 1/2W	
R46	1-247-807-31	CARBON 100 5% 1/4W	
R47	1-214-810-00	METAL 5.6 1% 1/2W	
R48	1-214-810-00	METAL 5.6 1% 1/2W	
R49	1-247-807-31	CARBON 100 5% 1/4W	
R50	1-214-810-00	METAL 5.6 1% 1/2W	
R51	1-214-810-00	METAL 5.6 1% 1/2W	
R52	1-216-388-11	METAL OXIDE 0.82 5% 3W	F
R53	1-215-911-11	METAL OXIDE 100 5% 3W	F
R54	1-260-288-11	CARBON 0.47 5% 1/2W	
R55	1-260-288-11	CARBON 0.47 5% 1/2W	
R56	1-215-451-00	METAL 18K 1% 1/4W	
R57	1-249-417-11	CARBON 1K 5% 1/4W	
R58	1-249-417-11	CARBON 1K 5% 1/4W	
R59	1-249-393-11	CARBON 10 5% 1/4W	F

E DC

Ref.No.	Part No.	Description				Remark
R60	1-249-399-11	CARBON	33	5%	1/4W	F
R61	1-249-437-11	CARBON	47K	5%	1/4W	
R62	1-249-421-11	CARBON	2.2K	5%	1/4W	
R63	1-217-210-11	WIREWOUND	6.8	10%	2W	F
R64	1-260-340-11	CARBON	10K	5%	1/2W	
R65	1-202-961-11	CEMENTED	1.8	5%	10W	
R66	1-249-399-11	CARBON	33	5%	1/4W	F
R67	1-215-915-11	METAL OXIDE	470	5%	3W	F
R68	1-249-429-11	CARBON	10K	5%	1/4W	
R69	1-202-961-11	CEMENTED	1.8	5%	10W	
R70	1-249-431-11	CARBON	15K	5%	1/4W	
R71	1-207-688-00	WIREWOUND	220	10%	5W	F
R72	1-249-399-11	CARBON	33	5%	1/4W	F
R73	1-249-429-11	CARBON	10K	5%	1/4W	
R74	1-249-431-11	CARBON	15K	5%	1/4W	
R75	1-249-429-11	CARBON	10K	5%	1/4W	
R76	1-249-431-11	CARBON	15K	5%	1/4W	
R77	1-249-425-11	CARBON	4.7K	5%	1/4W	
R78	1-249-431-11	CARBON	15K	5%	1/4W	
R79	1-216-400-11	METAL OXIDE	8.2	5%	3W	F
R80	1-219-513-11	CARBON	4.7M	5%	1/2W	
R81	1-216-400-11	METAL OXIDE	8.2	5%	3W	F
R82	1-219-513-11	CARBON	4.7M	5%	1/2W	
R83	1-216-400-11	METAL OXIDE	8.2	5%	3W	F
R84	1-219-513-11	CARBON	4.7M	5%	1/2W	
R85	1-215-911-11	METAL OXIDE	100	5%	3W	F
R86	1-219-513-11	CARBON	4.7M	5%	1/2W	
R87	1-216-400-11	METAL OXIDE	8.2	5%	3W	F
R88	1-215-451-00	METAL	18K	1%	1/4W	
R89	1-215-451-00	METAL	18K	1%	1/4W	
R90	1-216-400-11	METAL OXIDE	8.2	5%	3W	F
R91	1-215-911-11	METAL OXIDE	100	5%	3W	F
R92	1-216-400-11	METAL OXIDE	8.2	5%	3W	F
R93	1-216-400-11	METAL OXIDE	8.2	5%	3W	F
R94	1-216-400-11	METAL OXIDE	8.2	5%	3W	F
R95	1-215-451-00	METAL	18K	1%	1/4W	
R96	1-215-451-00	METAL	18K	1%	1/4W	
R97	1-215-453-00	METAL	22K	1%	1/4W	
R98	1-215-915-11	METAL OXIDE	470	5%	3W	F
	<RELAY>					
RY1	* 1-515-868-11	RELAY				
	<TRANSFORMER>					
T1	1-433-524-11	TRANSFORMER, HORIZONTAL DRIVE				
T2	1-433-520-11	TRANSFORMER, FERRITE (HOT)				
	<TEST PIN>					
TP1	* 1-537-864-11	PIN, POST				
TP2	* 1-537-864-11	PIN, POST				

Ref.No.	Part No.	Description			Remark
	**********				
	* A-1346-773-A	DC COMPLETE PC BOARD			
		**********			
	* 4-056-414-01	BUSHING, SQUARE			
	4-067-833-01	SHEET (DC), INSULATOR			
	4-382-854-11	SCREW (M3X10), P, SW (+)			
	7-682-651-09	SCREW +PS 3X14			
	7-682-651-09	SCREW +PS 3X14			
	7-682-950-01	SCREW +PSW 3X12			
	<CAPACITOR>				
C1	1-162-318-11	CERAMIC	0.001μF	10%	500V
C2	1-162-318-11	CERAMIC	0.001μF	10%	500V
C3	1-162-318-11	CERAMIC	0.001μF	10%	500V
C4	1-162-318-11	CERAMIC	0.001μF	10%	500V
C5	1-162-318-11	CERAMIC	0.001μF	10%	500V
C6	1-162-318-11	CERAMIC	0.001μF	10%	500V
C7	1-107-906-11	ELECT	10μF	20%	50V
C8	1-101-004-00	CERAMIC	0.01μF		50V
C9	1-101-004-00	CERAMIC	0.01μF		50V
C10	1-102-050-00	CERAMIC	0.01μF	99%	500V
C11	1-102-050-00	CERAMIC	0.01μF	99%	500V
C12	1-111-168-91	ELECT	100μF	20%	100V
C13	1-102-050-00	CERAMIC	0.01μF	99%	500V
C14	1-102-824-00	CERAMIC	470PF	5%	50V
C15	1-101-004-00	CERAMIC	0.01μF		50V
C16	1-111-168-91	ELECT	100μF	20%	100V
C17	1-101-004-00	CERAMIC	0.01μF		50V
C18	1-111-168-91	ELECT	100μF	20%	100V
C19	1-102-050-00	CERAMIC	0.01μF	99%	500V
C20	1-111-168-91	ELECT	100μF	20%	100V
C21	1-102-852-91	CERAMIC	47PF	5%	50V
C22	1-107-926-11	ELECT	2.2μF	20%	100V
C23	1-102-824-00	CERAMIC	470PF	5%	50V
C24	1-102-852-91	CERAMIC	47PF	5%	50V
C25	1-102-824-00	CERAMIC	470PF	5%	50V
C26	1-128-526-11	ELECT	100μF	20%	16V
C27	1-102-852-91	CERAMIC	47PF	5%	50V
C28	1-107-906-11	ELECT	10μF	20%	50V
C29	1-102-824-00	CERAMIC	470PF	5%	50V
C30	1-102-824-00	CERAMIC	470PF	5%	50V
C31	1-102-824-00	CERAMIC	470PF	5%	50V
C32	1-101-004-00	CERAMIC	0.01μF		50V
C33	1-101-004-00	CERAMIC	0.01μF		50V
C34	1-101-004-00	CERAMIC	0.01μF		50V
C35	1-101-004-00	CERAMIC	0.01μF		50V
C38	1-102-050-00	CERAMIC	0.01μF	99%	500V
C39	1-111-168-91	ELECT	100μF	20%	100V
C40	1-107-906-11	ELECT	10μF	20%	50V
C43	1-111-171-31	ELECT	220μF	20%	100V
C44	1-128-526-11	ELECT	100μF	20%	16V
C45	1-111-057-11	ELECT	120μF	20%	25V
C46	1-102-050-00	CERAMIC	0.01μF	99%	500V
C49	1-111-168-91	ELECT	100μF	20%	100V
C50	1-102-050-00	CERAMIC	0.01μF	99%	500V
C51	1-107-906-11	ELECT	10μF	20%	50V

Ref.No.	Part No.	Description				Remark
C52	1-162-318-11	CERAMIC	0.001μF	10%	500V	
C53	1-162-318-11	CERAMIC	0.001μF	10%	500V	
C54	1-162-318-11	CERAMIC	0.001μF	10%	500V	
C55	1-162-318-11	CERAMIC	0.001μF	10%	500V	
C56	1-162-318-11	CERAMIC	0.001μF	10%	500V	
C57	1-162-318-11	CERAMIC	0.001μF	10%	500V	
C58	1-111-171-31	ELECT	220μF	20%	100V	
C59	1-102-050-00	CERAMIC	0.01μF	99%	500V	
C60	1-111-168-91	ELECT	100μF	20%	100V	
C61	1-128-526-11	ELECT	100μF	20%	16V	
C62	1-102-050-00	CERAMIC	0.01μF	99%	500V	
C63	1-102-050-00	CERAMIC	0.01μF	99%	500V	
C64	1-111-168-91	ELECT	100μF	20%	100V	
C65	1-102-050-00	CERAMIC	0.01μF	99%	500V	
C66	1-111-168-91	ELECT	100μF	20%	100V	
C67	1-111-168-91	ELECT	100μF	20%	100V	
C68	1-107-926-11	ELECT	2.2μF	20%	100V	
C69	1-102-824-00	CERAMIC	470PF	5%	50V	
C70	1-102-824-00	CERAMIC	470PF	5%	50V	
C71	1-102-824-00	CERAMIC	470PF	5%	50V	
C72	1-102-824-00	CERAMIC	470PF	5%	50V	
C73	1-102-852-91	CERAMIC	47PF	5%	50V	
C74	1-102-824-00	CERAMIC	470PF	5%	50V	
C75	1-102-852-91	CERAMIC	47PF	5%	50V	
C76	1-102-824-00	CERAMIC	470PF	5%	50V	
C77	1-102-852-91	CERAMIC	47PF	5%	50V	
	<CONNECTOR>					
CN190	* 1-564-515-11	PLUG, CONNECTOR 12P				
CN191	* 1-564-510-11	PLUG, CONNECTOR 7P				
CN192	* 1-764-334-11	PLUG, CONNECTOR 11P				
CN193	* 1-564-510-11	PLUG, CONNECTOR 7P				
CN194	* 1-564-510-11	PLUG, CONNECTOR 7P				
CN195	* 1-564-510-11	PLUG, CONNECTOR 7P				
CN196	* 1-564-507-11	PLUG, CONNECTOR 4P				
	<DIODE>					
D1	8-719-109-85	DIODE RD5.1ESB2				
D2	8-719-109-85	DIODE RD5.1ESB2				
D3	8-719-911-19	DIODE 1SS119-25				
D4	8-719-109-85	DIODE RD5.1ESB2				
D9	8-719-109-85	DIODE RD5.1ESB2				
D18	8-719-911-19	DIODE 1SS119-25				
D20	8-719-911-19	DIODE 1SS119-25				
D21	8-719-911-19	DIODE 1SS119-25				
	<IC>					
IC1	8-749-012-58	IC STK392-220				
IC2	8-759-103-93	IC UPC393C				
IC3	8-759-103-93	IC UPC393C				
IC4	8-749-012-58	IC STK392-220				
	<COIL>					
L1	1-459-155-00	COIL (WITH CORE) 45μH				
L2	1-459-155-00	COIL (WITH CORE) 45μH				

Ref.No.	Part No.	Description				Remark
L4	1-459-155-00	COIL (WITH CORE) 45μH				
	<TRANSISTOR>					
Q1	8-729-030-02	TRANSISTOR DTC144ESA				
Q2	8-729-207-82	TRANSISTOR 2SC3421-Y				
Q3	8-729-030-02	TRANSISTOR DTC144ESA				
Q7	8-729-207-82	TRANSISTOR 2SC3421-Y				
Q11	8-729-207-89	TRANSISTOR 2SA1358-Y				
Q12	8-729-207-82	TRANSISTOR 2SC3421-Y				
	<RESISTOR>					
R1	1-249-405-11	CARBON	100	5%	1/4W	F
R2	1-249-405-11	CARBON	100	5%	1/4W	F
R3	1-249-405-11	CARBON	100	5%	1/4W	F
R4	1-249-421-11	CARBON	2.2K	5%	1/4W	
R5	1-247-815-91	CARBON	220	5%	1/4W	
R6	1-247-815-91	CARBON	220	5%	1/4W	
R7	1-247-815-91	CARBON	220	5%	1/4W	
R8	1-247-815-91	CARBON	220	5%	1/4W	
R9	1-247-815-91	CARBON	220	5%	1/4W	
R10	1-247-815-91	CARBON	220	5%	1/4W	
R11	1-249-429-11	CARBON	10K	5%	1/4W	
R12	1-249-429-11	CARBON	10K	5%	1/4W	
R13	1-247-807-31	CARBON	100	5%	1/4W	
R14	1-249-437-11	CARBON	47K	5%	1/4W	
R15	1-247-863-91	CARBON	22K	5%	1/4W	
R16	1-215-433-00	METAL	3.3K	1%	1/4W	
R17	1-249-425-11	CARBON	4.7K	5%	1/4W	
R18	1-215-413-00	METAL	470	1%	1/4W	
R19	1-249-437-11	CARBON	47K	5%	1/4W	
R20	1-214-816-00	METAL	10	1%	1/2W	
R21	1-214-816-00	METAL	10	1%	1/2W	
R22	1-214-816-00	METAL	10	1%	1/2W	
R23	1-214-816-00	METAL	10	1%	1/2W	
R24	1-214-816-00	METAL	10	1%	1/2W	
R25	1-214-816-00	METAL	10	1%	1/2W	
R26	1-214-816-00	METAL	10	1%	1/2W	
R27	1-214-816-00	METAL	10	1%	1/2W	
R28	1-214-816-00	METAL	10	1%	1/2W	
R29	1-214-816-00	METAL	10	1%	1/2W	
R30	1-215-433-00	METAL	3.3K	1%	1/4W	
R31	1-216-475-11	METAL OXIDE	120	5%	3W	F
R32	1-247-807-31	CARBON	100	5%	1/4W	
R33	1-249-429-11	CARBON	10K	5%	1/4W	
R34	1-247-807-31	CARBON	100	5%	1/4W	
R35	1-249-434-11	CARBON	27K	5%	1/4W	
R36	1-215-413-00	METAL	470	1%	1/4W	
R37	1-249-421-11	CARBON	2.2K	5%	1/4W	
R38	1-216-475-11	METAL OXIDE	120	5%	3W	F
R39	1-214-816-00	METAL	10	1%	1/2W	
R40	1-214-816-00	METAL	10	1%	1/2W	
R41	1-214-816-00	METAL	10	1%	1/2W	
R42	1-214-816-00	METAL	10	1%	1/2W	
R43	1-214-816-00	METAL	10	1%	1/2W	
R44	1-214-816-00	METAL	10	1%	1/2W	
R45	1-214-816-00	METAL	10	1%	1/2W	

DC

Ref.No.	Part No.	Description				Remark
R46	1-214-816-00	METAL	10	1%	1/2W	
R47	1-214-816-00	METAL	10	1%	1/2W	
R48	1-214-816-00	METAL	10	1%	1/2W	
R49	1-215-433-00	METAL	3.3K	1%	1/4W	
R50	1-247-807-31	CARBON	100	5%	1/4W	
R51	1-215-413-00	METAL	470	1%	1/4W	
R52	1-247-807-31	CARBON	100	5%	1/4W	
R53	1-247-807-31	CARBON	100	5%	1/4W	
R54	1-247-807-31	CARBON	100	5%	1/4W	
R55	1-249-421-11	CARBON	2.2K	5%	1/4W	
R56	1-249-429-11	CARBON	10K	5%	1/4W	
R57	1-215-433-00	METAL	3.3K	1%	1/4W	
R58	1-215-433-00	METAL	3.3K	1%	1/4W	
R59	1-215-433-00	METAL	3.3K	1%	1/4W	
R60	1-214-816-00	METAL	10	1%	1/2W	
R61	1-214-816-00	METAL	10	1%	1/2W	
R62	1-214-816-00	METAL	10	1%	1/2W	
R63	1-214-816-00	METAL	10	1%	1/2W	
R64	1-214-816-00	METAL	10	1%	1/2W	
R65	1-214-816-00	METAL	10	1%	1/2W	
R66	1-214-816-00	METAL	10	1%	1/2W	
R67	1-214-816-00	METAL	10	1%	1/2W	
R68	1-214-816-00	METAL	10	1%	1/2W	
R69	1-214-816-00	METAL	10	1%	1/2W	
R70	1-249-429-11	CARBON	10K	5%	1/4W	
R71	1-247-863-91	CARBON	22K	5%	1/4W	
R72	1-247-807-31	CARBON	100	5%	1/4W	
R73	1-249-441-11	CARBON	100K	5%	1/4W	
R74	1-249-441-11	CARBON	100K	5%	1/4W	
R75	1-247-903-00	CARBON	1M	5%	1/4W	
R76	1-216-475-11	METAL OXIDE	120	5%	3W	F
R78	1-216-475-11	METAL OXIDE	120	5%	3W	F
R79	1-249-441-11	CARBON	100K	5%	1/4W	
R80	1-249-441-11	CARBON	100K	5%	1/4W	
R84	1-247-903-00	CARBON	1M	5%	1/4W	
R85	1-249-429-11	CARBON	10K	5%	1/4W	
R86	1-247-807-31	CARBON	100	5%	1/4W	
R89	1-247-863-91	CARBON	22K	5%	1/4W	
R90	1-249-421-11	CARBON	2.2K	5%	1/4W	
R95	1-216-475-11	METAL OXIDE	120	5%	3W	F
R96	1-249-413-11	CARBON	470	5%	1/4W	
R97	1-216-386-11	METAL OXIDE	0.56	5%	3W	F
R98	1-216-475-11	METAL OXIDE	120	5%	3W	F
R99	1-216-386-11	METAL OXIDE	0.56	5%	3W	F
R104	1-249-429-11	CARBON	10K	5%	1/4W	
R105	1-249-427-11	CARBON	6.8K	5%	1/4W	
R112	1-249-389-11	CARBON	4.7	5%	1/4W	F
R114	1-249-413-11	CARBON	470	5%	1/4W	
R115	1-216-386-11	METAL OXIDE	0.56	5%	3W	F
R116	1-249-405-11	CARBON	100	5%	1/4W	F
R117	1-249-405-11	CARBON	100	5%	1/4W	F
R118	1-249-405-11	CARBON	100	5%	1/4W	F
R119	1-247-815-91	CARBON	220	5%	1/4W	
R120	1-247-815-91	CARBON	220	5%	1/4W	
R121	1-247-815-91	CARBON	220	5%	1/4W	
R122	1-247-815-91	CARBON	220	5%	1/4W	
R123	1-247-815-91	CARBON	220	5%	1/4W	
R124	1-247-815-91	CARBON	220	5%	1/4W	
R125	1-216-386-11	METAL OXIDE	0.56	5%	3W	F
R126	1-249-429-11	CARBON	10K	5%	1/4W	
R127	1-249-427-11	CARBON	6.8K	5%	1/4W	
R128	1-247-863-91	CARBON	22K	5%	1/4W	
R129	1-249-425-11	CARBON	4.7K	5%	1/4W	
R130	1-249-434-11	CARBON	27K	5%	1/4W	
R131	1-247-807-31	CARBON	100	5%	1/4W	
R132	1-247-807-31	CARBON	100	5%	1/4W	
R133	1-247-807-31	CARBON	100	5%	1/4W	
R134	1-215-433-00	METAL	3.3K	1%	1/4W	
R135	1-215-433-00	METAL	3.3K	1%	1/4W	
R136	1-215-433-00	METAL	3.3K	1%	1/4W	
R137	1-215-433-00	METAL	3.3K	1%	1/4W	
R138	1-215-413-00	METAL	470	1%	1/4W	
R139	1-215-433-00	METAL	3.3K	1%	1/4W	
R140	1-215-413-00	METAL	470	1%	1/4W	
R141	1-215-433-00	METAL	3.3K	1%	1/4W	
R142	1-215-413-00	METAL	470	1%	1/4W	
R143	1-214-816-00	METAL	10	1%	1/2W	
R144	1-214-816-00	METAL	10	1%	1/2W	
R145	1-214-816-00	METAL	10	1%	1/2W	
R146	1-214-816-00	METAL	10	1%	1/2W	
R147	1-214-816-00	METAL	10	1%	1/2W	
R148	1-214-816-00	METAL	10	1%	1/2W	
R149	1-214-816-00	METAL	10	1%	1/2W	
R150	1-214-816-00	METAL	10	1%	1/2W	
R151	1-214-816-00	METAL	10	1%	1/2W	
R152	1-214-816-00	METAL	10	1%	1/2W	
R153	1-214-816-00	METAL	10	1%	1/2W	
R154	1-214-816-00	METAL	10	1%	1/2W	
R155	1-214-816-00	METAL	10	1%	1/2W	
R156	1-214-816-00	METAL	10	1%	1/2W	
R157	1-214-816-00	METAL	10	1%	1/2W	
R158	1-214-816-00	METAL	10	1%	1/2W	
R159	1-214-816-00	METAL	10	1%	1/2W	
R160	1-214-816-00	METAL	10	1%	1/2W	
R161	1-214-816-00	METAL	10	1%	1/2W	
R162	1-214-816-00	METAL	10	1%	1/2W	
R163	1-214-816-00	METAL	10	1%	1/2W	
R164	1-214-816-00	METAL	10	1%	1/2W	
R165	1-214-816-00	METAL	10	1%	1/2W	
R166	1-214-816-00	METAL	10	1%	1/2W	
R167	1-214-816-00	METAL	10	1%	1/2W	
R168	1-214-816-00	METAL	10	1%	1/2W	
R169	1-214-816-00	METAL	10	1%	1/2W	
R170	1-214-816-00	METAL	10	1%	1/2W	
R171	1-214-816-00	METAL	10	1%	1/2W	
R172	1-214-816-00	METAL	10	1%	1/2W	
R180	1-249-429-11	CARBON	10K	5%	1/4W	
R181	1-249-429-11	CARBON	10K	5%	1/4W	

Ref.No.	Part No.	Description			Remark
**********					
	* A-1346-774-A	DA COMPLETE PC BOARD			
		**********			
	<CAPACITOR>				
C101	1-126-968-11	ELECT	100µF	20%	50V
C102	1-164-004-11	CERAMIC CHIP	0.1µF	10%	25V
C103	1-126-963-11	ELECT	4.7µF	20%	50V
C104	1-163-251-11	CERAMIC CHIP	100PF	5%	50V
C105	1-126-964-11	ELECT	10µF	20%	50V
C106	1-126-933-11	ELECT	100µF	20%	16V
C107	1-163-253-11	CERAMIC CHIP	120PF	5%	50V
C108	1-163-251-11	CERAMIC CHIP	100PF	5%	50V
C109	1-126-968-11	ELECT	100µF	20%	50V
C110	1-164-004-11	CERAMIC CHIP	0.1µF	10%	25V
C111	1-137-366-11	FILM	0.0022µF	5%	50V
C112	1-126-959-11	ELECT	0.47µF	20%	50V
C113	1-126-963-11	ELECT	4.7µF	20%	50V
C114	1-136-159-00	FILM	0.033µF	5%	50V
C116	1-126-963-11	ELECT	4.7µF	20%	50V
C117	1-126-933-11	ELECT	100µF	20%	16V
C118	1-104-664-11	ELECT	47µF	20%	16V
C119	1-126-961-11	ELECT	2.2µF	20%	50V
C120	1-163-031-11	CERAMIC CHIP	0.01µF		50V
C121	1-163-031-11	CERAMIC CHIP	0.01µF		50V
C122	1-126-961-11	ELECT	2.2µF	20%	50V
C123	1-126-960-11	ELECT	1µF	20%	50V
C124	1-136-165-00	FILM	0.1µF	5%	50V
C125	1-163-031-11	CERAMIC CHIP	0.01µF		50V
C126	1-126-964-11	ELECT	10µF	20%	50V
C127	1-163-031-11	CERAMIC CHIP	0.01µF		50V
C128	1-137-368-11	FILM	0.0047µF	5%	50V
C129	1-163-031-11	CERAMIC CHIP	0.01µF		50V
C130	1-163-031-11	CERAMIC CHIP	0.01µF		50V
C131	1-137-194-81	FILM	0.47µF	5%	50V
C132	1-126-963-11	ELECT	4.7µF	20%	50V
C133	1-137-366-11	FILM	0.0022µF	5%	50V
C134	1-126-933-11	ELECT	100µF	20%	16V
C135	1-126-960-11	ELECT	1µF	20%	50V
C136	1-136-165-00	FILM	0.1µF	5%	50V
C137	1-130-471-00	FILM	0.001µF	5%	50V
C138	1-130-471-00	FILM	0.001µF	5%	50V
C139	1-126-965-11	ELECT	22µF	20%	50V
C140	1-126-960-11	ELECT	1µF	20%	50V
C141	1-130-471-00	FILM	0.001µF	5%	50V
C142	1-126-961-11	ELECT	2.2µF	20%	50V
C143	1-126-935-11	ELECT	470µF	20%	16V
C144	1-163-031-11	CERAMIC CHIP	0.01µF		50V
C145	1-136-157-00	FILM	0.022µF	5%	50V
C146	1-163-031-11	CERAMIC CHIP	0.01µF		50V
C147	1-126-934-11	ELECT	220µF	20%	16V
C148	1-163-251-11	CERAMIC CHIP	100PF	5%	50V
C149	1-163-259-91	CERAMIC CHIP	220PF	5%	50V
C150	1-126-961-11	ELECT	2.2µF	20%	50V
C151	1-163-031-11	CERAMIC CHIP	0.01µF	50V	
C152	1-163-251-11	CERAMIC CHIP	100PF	5%	50V
C153	1-163-251-11	CERAMIC CHIP	100PF	5%	50V
C154	1-126-964-11	ELECT	10µF	20%	50V
C155	1-126-960-11	ELECT	1µF	20%	50V
C156	1-126-960-11	ELECT	1µF	20%	50V
C157	1-136-153-00	FILM	0.01µF	5%	50V
C158	1-136-153-00	FILM	0.01µF	5%	50V
C159	1-163-031-11	CERAMIC CHIP	0.01µF		50V
C160	1-126-960-11	ELECT	1µF	20%	50V
C161	1-163-031-11	CERAMIC CHIP	0.01µF		50V
C162	1-126-964-11	ELECT	10µF	20%	50V
C163	1-126-934-11	ELECT	220µF	20%	16V
C164	1-163-031-11	CERAMIC CHIP	0.01µF		50V
C165	1-163-251-11	CERAMIC CHIP	100PF	5%	50V
C166	1-163-251-11	CERAMIC CHIP	100PF	5%	50V
C167	1-163-031-11	CERAMIC CHIP	0.01µF		50V
C168	1-126-964-11	ELECT	10µF	20%	50V
C169	1-163-251-11	CERAMIC CHIP	100PF	5%	50V
C170	1-163-031-11	CERAMIC CHIP	0.01µF		50V
C171	1-163-031-11	CERAMIC CHIP	0.01µF		50V
C172	1-163-031-11	CERAMIC CHIP	0.01µF		50V
C301	1-126-964-11	ELECT	10µF	20%	50V
C302	1-163-031-11	CERAMIC CHIP	0.01µF		50V
C303	1-126-964-11	ELECT	10µF	20%	50V
C304	1-164-346-11	CERAMIC CHIP	1µF		16V
C305	1-163-031-11	CERAMIC CHIP	0.01µF		50V
C306	1-126-964-11	ELECT	10µF	20%	50V
C307	1-163-251-11	CERAMIC CHIP	100PF	5%	50V
C308	1-126-964-11	ELECT	10µF	20%	50V
C309	1-163-031-11	CERAMIC CHIP	0.01µF		50V
C310	1-126-964-11	ELECT	10µF	20%	50V
C311	1-163-031-11	CERAMIC CHIP	0.01µF		50V
C312	1-163-031-11	CERAMIC CHIP	0.01µF		50V
C313	1-163-031-11	CERAMIC CHIP	0.01µF		50V
C314	1-163-031-11	CERAMIC CHIP	0.01µF		50V
C315	1-164-004-11	CERAMIC CHIP	0.1µF	10%	25V
C316	1-126-964-11	ELECT	10µF	20%	50V
C317	1-126-964-11	ELECT	10µF	20%	50V
C318	1-126-964-11	ELECT	10µF	20%	50V
C319	1-163-031-11	CERAMIC CHIP	0.01µF		50V
C320	1-163-031-11	CERAMIC CHIP	0.01µF		50V
C321	1-164-004-11	CERAMIC CHIP	0.1µF	10%	25V
C322	1-126-964-11	ELECT	10µF	20%	50V
C323	1-126-964-11	ELECT	10µF	20%	50V
C324	1-163-031-11	CERAMIC CHIP	0.01µF		50V
C325	1-163-031-11	CERAMIC CHIP	0.01µF		50V
C326	1-163-031-11	CERAMIC CHIP	0.01µF		50V
C327	1-163-031-11	CERAMIC CHIP	0.01µF		50V
C328	1-163-031-11	CERAMIC CHIP	0.01µF		50V
C329	1-163-031-11	CERAMIC CHIP	0.01µF		50V
C330	1-164-004-11	CERAMIC CHIP	0.1µF	10%	25V
C331	1-164-004-11	CERAMIC CHIP	0.1µF	10%	25V
C332	1-163-031-11	CERAMIC CHIP	0.01µF		50V
C333	1-163-031-11	CERAMIC CHIP	0.01µF		50V
C334	1-164-004-11	CERAMIC CHIP	0.1µF	10%	25V
C335	1-164-346-11	CERAMIC CHIP	1µF		16V
C351	1-126-964-11	ELECT	10µF	20%	50V
C352	1-163-031-11	CERAMIC CHIP	0.01µF		50V
C353	1-164-004-11	CERAMIC CHIP	0.1µF	10%	25V
C354	1-163-031-11	CERAMIC CHIP	0.01µF		50V

DA

Ref.No.	Part No.	Description			Remark
C355	1-164-004-11	CERAMIC CHIP 0.1μF	10%	25V	
C356	1-126-964-11	ELECT 10μF	20%	50V	
C357	1-164-004-11	CERAMIC CHIP 0.1μF	10%	25V	
C358	1-126-964-11	ELECT 10μF	20%	50V	
C359	1-164-004-11	CERAMIC CHIP 0.1μF	10%	25V	
C360	1-163-031-11	CERAMIC CHIP 0.01μF		50V	
C361	1-126-933-11	ELECT 100μF	20%	16V	
C362	1-126-933-11	ELECT 100μF	20%	16V	
C364	1-163-031-11	CERAMIC CHIP 0.01μF		50V	
C365	1-163-031-11	CERAMIC CHIP 0.01μF		50V	
C366	1-163-031-11	CERAMIC CHIP 0.01μF		50V	
C367	1-126-965-11	ELECT 22μF	20%	50V	
C368	1-126-965-11	ELECT 22μF	20%	50V	
C401	1-163-031-11	CERAMIC CHIP 0.01μF		50V	
C402	1-163-031-11	CERAMIC CHIP 0.01μF		50V	
C403	1-163-227-11	CERAMIC CHIP 10PF	0.5PF	50V	
C404	1-163-031-11	CERAMIC CHIP 0.01μF		50V	
C405	1-163-031-11	CERAMIC CHIP 0.01μF		50V	
C406	1-163-031-11	CERAMIC CHIP 0.01μF		50V	
C407	1-164-004-11	CERAMIC CHIP 0.1μF	10%	25V	
C409	1-163-031-11	CERAMIC CHIP 0.01μF		50V	
C410	1-163-031-11	CERAMIC CHIP 0.01μF		50V	
C411	1-163-031-11	CERAMIC CHIP 0.01μF		50V	
C412	1-164-004-11	CERAMIC CHIP 0.1μF	10%	25V	
C413	1-126-964-11	ELECT 10μF	20%	50V	
C414	1-163-031-11	CERAMIC CHIP 0.01μF		50V	
C415	1-126-964-11	ELECT 10μF	20%	50V	
C416	1-163-031-11	CERAMIC CHIP 0.01μF		50V	
C417	1-163-031-11	CERAMIC CHIP 0.01μF		50V	
C418	1-163-031-11	CERAMIC CHIP 0.01μF		50V	
C419	1-164-004-11	CERAMIC CHIP 0.1μF	10%	25V	
C425	1-126-960-11	ELECT 1μF	20%	50V	
C451	1-163-031-11	CERAMIC CHIP 0.01μF		50V	
C452	1-126-933-11	ELECT 100μF	20%	16V	
C453	1-126-933-11	ELECT 100μF	20%	16V	
C454	1-163-031-11	CERAMIC CHIP 0.01μF		50V	
C455	1-104-664-11	ELECT 47μF	20%	16V	
C456	1-126-964-11	ELECT 10μF	20%	50V	
C457	1-136-155-00	FILM 0.015μF	5%	50V	
C458	1-136-159-00	FILM 0.033μF	5%	50V	
C459	1-136-165-00	FILM 0.1μF	5%	50V	
	<CONNECTOR>				
CN170	* 1-778-891-11	CONNECTOR, BOARD TO BOARD			
	<DIODE>				
D101	8-719-053-18	DIODE 1SR154-400TE-25			
D102	8-719-801-78	DIODE 1SS184			
D103	8-719-053-18	DIODE 1SR154-400TE-25			
D104	8-719-801-78	DIODE 1SS184			
D105	8-719-053-18	DIODE 1SR154-400TE-25			
D106	8-719-801-78	DIODE 1SS184			
D107	8-719-801-78	DIODE 1SS184			
D108	8-719-800-76	DIODE 1SS226			
D109	8-719-801-78	DIODE 1SS184			
D110	8-719-158-49	DIODE RD12SB2			
D111	8-719-801-78	DIODE 1SS184			
D112	8-719-801-78	DIODE 1SS184			
D113	8-719-801-78	DIODE 1SS184			
D351	8-719-053-18	DIODE 1SR154-400TE-25			
D352	8-719-053-18	DIODE 1SR154-400TE-25			
D353	8-719-977-28	DIODE DTZ10B			
D354	8-719-056-76	DIODE UDZ-TE-17-3.6B			
D355	8-719-158-15	DIODE RD5.6SB			
D356	8-719-801-78	DIODE 1SS184			
	<IC>				
IC101	8-759-300-78	IC HD14538BFP			
IC102	8-759-460-81	IC BA12FP-E2			
IC103	8-759-300-78	IC HD14538BFP			
IC104	8-759-381-53	IC UPC814G2-E2			
IC105	8-759-466-51	IC NJM79M12DLA(TE1)			
IC106	8-749-010-15	IC MC-8639A			
IC107	8-759-381-53	IC UPC814G2-E2			
IC108	8-759-100-93	IC UPC393G2			
IC109	8-759-381-53	IC UPC814G2-E2			
IC110	8-759-100-60	IC UPC1377C			
IC112	8-759-381-53	IC UPC814G2-E2			
IC113	8-759-381-53	IC UPC814G2-E2			
IC114	8-759-300-78	IC HD14538BFP			
IC115	8-759-100-96	IC UPC4558G2			
IC116	8-759-300-78	IC HD14538BFP			
IC117	8-759-239-34	IC TC74HC4538AF			
IC301	8-752-068-37	IC CXA1726AM			
IC302	8-759-286-47	IC PC74HC4053D-T			
IC303	8-759-457-55	IC AD835AR-REEL			
IC305	8-759-984-88	IC LM6361M			
IC306	8-759-381-53	IC UPC814G2-E2			
IC307	8-759-984-88	IC LM6361M			
IC308	8-759-925-99	IC SN74HC109ANS			
IC309	8-759-421-87	IC UPC319G2-E2			
IC310	8-759-031-84	IC SC7S04F			
IC311	8-759-286-47	IC PC74HC4053D-T			
IC312	8-759-381-53	IC UPC814G2-E2			
IC313	8-759-381-53	IC UPC814G2-E2			
IC314	8-759-234-20	IC TC7S08F			
IC351	8-759-908-15	IC TL431CLP			
IC352	8-759-381-53	IC UPC814G2-E2			
IC353	8-759-460-74	IC BA05FP-E2			
IC354	8-759-381-53	IC UPC814G2-E2			
IC355	8-759-539-89	IC LM2990SX-5.0			
IC401	8-759-984-88	IC LM6361M			
IC402	8-759-392-64	IC AD828AR			
IC403	8-759-286-47	IC PC74HC4053D-T			
IC405	8-759-392-64	IC AD828AR			
IC406	8-759-457-55	IC AD835AR-REEL			
IC407	8-759-381-53	IC UPC814G2-E2			
IC451	8-752-065-69	IC CXA1470AS			
IC452	8-759-381-53	IC UPC814G2-E2			
	<COIL>				
L101	1-412-533-21	INDUCTOR 47μH			
L102	1-412-533-21	INDUCTOR 47μH			

Ref.No.	Part No.	Description			Remark
L351	1-412-533-21	INDUCTOR 47μH			
L352	1-412-533-21	INDUCTOR 47μH			
	<TRANSISTOR>				
Q101	8-729-030-02	TRANSISTOR DTC144ESA			
Q102	8-729-105-74	TRANSISTOR 2SK523-M1			
Q103	8-729-230-49	TRANSISTOR 2SC2712-YG			
Q104	8-729-230-49	TRANSISTOR 2SC2712-YG			
Q105	8-729-030-02	TRANSISTOR DTC144ESA			
Q106	8-729-230-49	TRANSISTOR 2SC2712-YG			
Q107	8-729-230-49	TRANSISTOR 2SC2712-YG			
Q108	8-729-230-49	TRANSISTOR 2SC2712-YG			
Q109	8-729-926-23	TRANSISTOR FMW5			
Q110	8-729-904-04	TRANSISTOR FMS2			
Q111	8-729-230-49	TRANSISTOR 2SC2712-YG			
Q112	8-729-230-49	TRANSISTOR 2SC2712-YG			
Q113	8-729-230-49	TRANSISTOR 2SC2712-YG			
Q114	8-729-216-22	TRANSISTOR 2SA1162-G			
Q115	8-729-216-22	TRANSISTOR 2SA1162-G			
Q116	8-729-030-02	TRANSISTOR DTC144ESA			
Q117	8-729-230-49	TRANSISTOR 2SC2712-YG			
Q118	8-729-030-02	TRANSISTOR DTC144ESA			
Q119	8-729-230-49	TRANSISTOR 2SC2712-YG			
Q120	8-729-230-49	TRANSISTOR 2SC2712-YG			
Q121	8-729-216-22	TRANSISTOR 2SA1162-G			
Q122	8-729-216-22	TRANSISTOR 2SA1162-G			
Q123	8-729-230-49	TRANSISTOR 2SC2712-YG			
Q124	8-729-216-22	TRANSISTOR 2SA1162-G			
Q125	8-729-230-49	TRANSISTOR 2SC2712-YG			
Q126	8-729-230-49	TRANSISTOR 2SC2712-YG			
Q127	8-729-216-22	TRANSISTOR 2SA1162-G			
Q128	1-801-806-11	TRANSISTOR DTC144EKA-T146			
Q301	8-729-230-49	TRANSISTOR 2SC2712-YG			
Q302	8-729-216-22	TRANSISTOR 2SA1162-G			
Q351	8-729-230-49	TRANSISTOR 2SC2712-YG			
Q352	8-729-216-22	TRANSISTOR 2SA1162-G			
Q353	8-729-230-49	TRANSISTOR 2SC2712-YG			
Q354	8-729-030-02	TRANSISTOR DTC144ESA			
Q401	8-729-926-23	TRANSISTOR FMW5			
Q402	8-729-026-57	TRANSISTOR FMS1A-T148			
Q403	8-729-216-22	TRANSISTOR 2SA1162-G			
Q404	8-729-230-49	TRANSISTOR 2SC2712-YG			
Q451	8-729-230-49	TRANSISTOR 2SC2712-YG			
Q452	8-729-230-49	TRANSISTOR 2SC2712-YG			
Q811	1-801-806-11	TRANSISTOR DTC144EKA-T146			
	<RESISTOR>				
R101	1-216-699-11	METAL CHIP	100K	0.50%	1/10W
R102	1-216-073-00	RES,CHIP	10K	5%	1/10W
R103	1-216-049-91	RES,CHIP	1K	5%	1/10W
R104	1-216-651-11	METAL CHIP	1K	0.50%	1/10W
R105	1-216-649-11	METAL CHIP	820	0.50%	1/10W
R106	1-216-065-91	RES,CHIP	4.7K	5%	1/10W
R107	1-216-651-11	METAL CHIP	1K	0.50%	1/10W
R108	1-216-687-11	METAL CHIP	33K	0.50%	1/10W
R109	1-216-049-91	RES,CHIP	1K	5%	1/10W
R110	1-216-077-00	RES,CHIP	15K	5%	1/10W
R111	1-216-101-00	RES,CHIP	150K	5%	1/10W
R112	1-216-083-00	RES,CHIP	27K	5%	1/10W
R113	1-216-033-00	RES,CHIP	220	5%	1/10W
R114	1-216-049-91	RES,CHIP	1K	5%	1/10W
R115	1-216-673-11	METAL CHIP	8.2K	0.50%	1/10W
R116	1-216-691-11	METAL CHIP	47K	0.50%	1/10W
R117	1-216-691-11	METAL CHIP	47K	0.50%	1/10W
R118	1-216-699-11	METAL CHIP	100K	0.50%	1/10W
R119	1-216-025-91	RES,CHIP	100	5%	1/10W
R120	1-216-057-00	RES,CHIP	2.2K	5%	1/10W
R121	1-216-041-00	RES,CHIP	470	5%	1/10W
R122	1-216-691-11	METAL CHIP	47K	0.50%	1/10W
R125	1-216-699-11	METAL CHIP	100K	0.50%	1/10W
R126	1-216-691-11	METAL CHIP	47K	0.50%	1/10W
R127	1-216-683-11	METAL CHIP	22K	0.50%	1/10W
R128	1-216-089-91	RES,CHIP	47K	5%	1/10W
R129	1-216-089-91	RES,CHIP	47K	5%	1/10W
R130	1-216-089-91	RES,CHIP	47K	5%	1/10W
R131	1-216-065-91	RES,CHIP	4.7K	5%	1/10W
R132	1-216-095-00	RES,CHIP	82K	5%	1/10W
R133	1-216-065-91	RES,CHIP	4.7K	5%	1/10W
R134	1-216-049-91	RES,CHIP	1K	5%	1/10W
R135	1-216-097-91	RES,CHIP	100K	5%	1/10W
R136	1-216-073-00	RES,CHIP	10K	5%	1/10W
R137	1-216-085-00	RES,CHIP	33K	5%	1/10W
R138	1-216-073-00	RES,CHIP	10K	5%	1/10W
R139	1-216-073-00	RES,CHIP	10K	5%	1/10W
R140	1-216-073-00	RES,CHIP	10K	5%	1/10W
R141	1-216-675-11	METAL CHIP	10K	0.50%	1/10W
R142	1-216-013-00	RES,CHIP	33	5%	1/10W
R143	1-216-697-91	METAL CHIP	82K	0.50%	1/10W
R144	1-216-697-91	METAL CHIP	82K	0.50%	1/10W
R145	1-216-081-00	RES,CHIP	22K	5%	1/10W
R146	1-216-049-91	RES,CHIP	1K	5%	1/10W
R147	1-216-643-11	METAL CHIP	470	0.50%	1/10W
R148	1-216-663-11	METAL CHIP	3.3K	0.50%	1/10W
R149	1-216-091-00	RES,CHIP	56K	5%	1/10W
R150	1-216-049-91	RES,CHIP	1K	5%	1/10W
R151	1-216-697-91	METAL CHIP	82K	0.50%	1/10W
R152	1-216-697-91	METAL CHIP	82K	0.50%	1/10W
R153	1-216-025-91	RES,CHIP	100	5%	1/10W
R154	1-216-655-11	METAL CHIP	1.5K	0.50%	1/10W
R155	1-216-691-11	METAL CHIP	47K	0.50%	1/10W
R156	1-216-651-11	METAL CHIP	1K	0.50%	1/10W
R157	1-216-699-11	METAL CHIP	100K	0.50%	1/10W
R158	1-216-651-11	METAL CHIP	1K	0.50%	1/10W
R159	1-216-677-11	METAL CHIP	12K	0.50%	1/10W
R160	1-216-673-11	METAL CHIP	8.2K	0.50%	1/10W
R161	1-216-673-11	METAL CHIP	8.2K	0.50%	1/10W
R162	1-216-695-11	METAL CHIP	68K	0.50%	1/10W
R163	1-216-679-11	METAL CHIP	15K	0.50%	1/10W
R164	1-216-073-00	RES,CHIP	10K	5%	1/10W
R165	1-216-665-11	METAL CHIP	3.9K	0.50%	1/10W
R166	1-216-065-91	RES,CHIP	4.7K	5%	1/10W
R167	1-216-659-11	METAL CHIP	2.2K	0.50%	1/10W
R168	1-216-085-00	RES,CHIP	33K	5%	1/10W
R169	1-216-065-91	RES,CHIP	4.7K	5%	1/10W
R170	1-216-073-00	RES,CHIP	10K	5%	1/10W
R171	1-216-069-00	RES,CHIP	6.8K	5%	1/10W

DA

Ref.No.	Part No.	Description			Remark
R172	1-216-071-00	RES,CHIP	8.2K	5%	1/10W
R173	1-216-049-91	RES,CHIP	1K	5%	1/10W
R174	1-216-049-91	RES,CHIP	1K	5%	1/10W
R175	1-216-049-91	RES,CHIP	1K	5%	1/10W
R176	1-216-105-91	RES,CHIP	220K	5%	1/10W
R177	1-216-043-91	RES,CHIP	560	5%	1/10W
R178	1-216-017-91	RES,CHIP	47	5%	1/10W
R179	1-216-089-91	RES,CHIP	47K	5%	1/10W
R180	1-216-031-00	RES,CHIP	180	5%	1/10W
R181	1-216-683-11	METAL CHIP	22K	0.50%	1/10W
R182	1-216-651-11	METAL CHIP	1K	0.50%	1/10W
R183	1-216-043-91	RES,CHIP	560	5%	1/10W
R184	1-216-683-11	METAL CHIP	22K	0.50%	1/10W
R185	1-216-025-91	RES,CHIP	100	5%	1/10W
R186	1-216-091-00	RES,CHIP	56K	5%	1/10W
R187	1-216-025-91	RES,CHIP	100	5%	1/10W
R188	1-216-049-91	RES,CHIP	1K	5%	1/10W
R189	1-216-073-00	RES,CHIP	10K	5%	1/10W
R190	1-216-073-00	RES,CHIP	10K	5%	1/10W
R191	1-216-061-00	RES,CHIP	3.3K	5%	1/10W
R192	1-216-057-00	RES,CHIP	2.2K	5%	1/10W
R193	1-216-059-00	RES,CHIP	2.7K	5%	1/10W
R194	1-216-049-91	RES,CHIP	1K	5%	1/10W
R195	1-216-049-91	RES,CHIP	1K	5%	1/10W
R196	1-216-073-00	RES,CHIP	10K	5%	1/10W
R197	1-216-057-00	RES,CHIP	2.2K	5%	1/10W
R198	1-216-055-00	RES,CHIP	1.8K	5%	1/10W
R199	1-216-025-91	RES,CHIP	100	5%	1/10W
R200	1-216-049-91	RES,CHIP	1K	5%	1/10W
R201	1-216-073-00	RES,CHIP	10K	5%	1/10W
R202	1-216-691-11	METAL CHIP	47K	0.50%	1/10W
R203	1-216-077-00	RES,CHIP	15K	5%	1/10W
R204	1-216-065-91	RES,CHIP	4.7K	5%	1/10W
R205	1-216-073-00	RES,CHIP	10K	5%	1/10W
R206	1-216-077-00	RES,CHIP	15K	5%	1/10W
R207	1-216-073-00	RES,CHIP	10K	5%	1/10W
R208	1-216-073-00	RES,CHIP	10K	5%	1/10W
R209	1-216-073-00	RES,CHIP	10K	5%	1/10W
R210	1-216-073-00	RES,CHIP	10K	5%	1/10W
R211	1-216-049-91	RES,CHIP	1K	5%	1/10W
R212	1-216-643-11	METAL CHIP	470	0.50%	1/10W
R213	1-216-049-91	RES,CHIP	1K	5%	1/10W
R214	1-216-061-00	RES,CHIP	3.3K	5%	1/10W
R215	1-216-061-00	RES,CHIP	3.3K	5%	1/10W
R216	1-216-667-11	METAL CHIP	4.7K	0.50%	1/10W
R217	1-216-677-11	METAL CHIP	12K	0.50%	1/10W
R218	1-216-675-11	METAL CHIP	10K	0.50%	1/10W
R219	1-216-669-11	METAL CHIP	5.6K	0.50%	1/10W
R220	1-216-667-11	METAL CHIP	4.7K	0.50%	1/10W
R221	1-216-667-11	METAL CHIP	4.7K	0.50%	1/10W
R222	1-216-001-00	RES,CHIP	10	5%	1/10W
R223	1-216-667-11	METAL CHIP	4.7K	0.50%	1/10W
R224	1-216-651-11	METAL CHIP	1K	0.50%	1/10W
R225	1-216-641-11	METAL CHIP	390	0.50%	1/10W
R226	1-216-673-11	METAL CHIP	8.2K	0.50%	1/10W
R227	1-216-065-91	RES,CHIP	4.7K	5%	1/10W
R228	1-216-025-91	RES,CHIP	100	5%	1/10W
R229	1-216-659-11	METAL CHIP	2.2K	0.50%	1/10W

Ref.No.	Part No.	Description			Remark
R301	1-218-758-11	METAL CHIP	180K	0.50%	1/10W
R302	1-216-685-11	METAL CHIP	27K	0.50%	1/10W
R303	1-216-651-11	METAL CHIP	1K	0.50%	1/10W
R304	1-216-651-11	METAL CHIP	1K	0.50%	1/10W
R305	1-216-661-11	METAL CHIP	2.7K	0.50%	1/10W
R306	1-216-661-11	METAL CHIP	2.7K	0.50%	1/10W
R307	1-216-025-91	RES,CHIP	100	5%	1/10W
R308	1-216-651-11	METAL CHIP	1K	0.50%	1/10W
R309	1-216-675-11	METAL CHIP	10K	0.50%	1/10W
R310	1-216-025-91	RES,CHIP	100	5%	1/10W
R311	1-216-651-11	METAL CHIP	1K	0.50%	1/10W
R312	1-216-657-11	METAL CHIP	1.8K	0.50%	1/10W
R313	1-216-025-91	RES,CHIP	100	5%	1/10W
R315	1-216-025-91	RES,CHIP	100	5%	1/10W
R317	1-216-659-11	METAL CHIP	2.2K	0.50%	1/10W
R318	1-216-635-11	METAL CHIP	220	0.50%	1/10W
R319	1-216-685-11	METAL CHIP	27K	0.50%	1/10W
R320	1-216-675-11	METAL CHIP	10K	0.50%	1/10W
R321	1-216-665-11	METAL CHIP	3.9K	0.50%	1/10W
R322	1-216-669-11	METAL CHIP	5.6K	0.50%	1/10W
R323	1-216-661-11	METAL CHIP	2.7K	0.50%	1/10W
R324	1-216-025-91	RES,CHIP	100	5%	1/10W
R325	1-216-699-11	METAL CHIP	100K	0.50%	1/10W
R326	1-216-025-91	RES,CHIP	100	5%	1/10W
R327	1-216-651-11	METAL CHIP	1K	0.50%	1/10W
R328	1-216-695-11	METAL CHIP	68K	0.50%	1/10W
R329	1-216-651-11	METAL CHIP	1K	0.50%	1/10W
R330	1-216-667-11	METAL CHIP	4.7K	0.50%	1/10W
R331	1-216-667-11	METAL CHIP	4.7K	0.50%	1/10W
R332	1-216-025-91	RES,CHIP	100	5%	1/10W
R333	1-216-651-11	METAL CHIP	1K	0.50%	1/10W
R334	1-216-667-11	METAL CHIP	4.7K	0.50%	1/10W
R335	1-216-651-11	METAL CHIP	1K	0.50%	1/10W
R336	1-216-667-11	METAL CHIP	4.7K	0.50%	1/10W
R337	1-216-667-11	METAL CHIP	4.7K	0.50%	1/10W
R338	1-216-679-11	METAL CHIP	15K	0.50%	1/10W
R339	1-216-667-11	METAL CHIP	4.7K	0.50%	1/10W
R341	1-216-049-91	RES,CHIP	1K	5%	1/10W
R342	1-216-049-91	RES,CHIP	1K	5%	1/10W
R343	1-216-097-91	RES,CHIP	100K	5%	1/10W
R344	1-216-073-00	RES,CHIP	10K	5%	1/10W
R345	1-216-101-00	RES,CHIP	150K	5%	1/10W
R351	1-216-635-11	METAL CHIP	220	0.50%	1/10W
R352	1-216-683-11	METAL CHIP	22K	0.50%	1/10W
R353	1-216-681-11	METAL CHIP	18K	0.50%	1/10W
R354	1-216-675-11	METAL CHIP	10K	0.50%	1/10W
R355	1-216-675-11	METAL CHIP	10K	0.50%	1/10W
R356	1-218-754-11	METAL CHIP	120K	0.50%	1/10W
R357	1-218-754-11	METAL CHIP	120K	0.50%	1/10W
R358	1-216-667-11	METAL CHIP	4.7K	0.50%	1/10W
R359	1-216-667-11	METAL CHIP	4.7K	0.50%	1/10W
R360	1-216-667-11	METAL CHIP	4.7K	0.50%	1/10W
R361	1-216-667-11	METAL CHIP	4.7K	0.50%	1/10W
R362	1-216-667-11	METAL CHIP	4.7K	0.50%	1/10W
R363	1-216-675-11	METAL CHIP	10K	0.50%	1/10W
R364	1-216-667-11	METAL CHIP	4.7K	0.50%	1/10W
R365	1-216-667-11	METAL CHIP	4.7K	0.50%	1/10W
R366	1-216-657-11	METAL CHIP	1.8K	0.50%	1/10W

Ref.No.	Part No.	Description			Remark
R367	1-216-685-11	METAL CHIP	27K	0.50%	1/10W
R368	1-216-073-00	RES,CHIP	10K	5%	1/10W
R369	1-216-669-11	METAL CHIP	5.6K	0.50%	1/10W
R370	1-216-073-00	RES,CHIP	10K	5%	1/10W
R371	1-216-065-91	RES,CHIP	4.7K	5%	1/10W
R375	1-216-065-91	RES,CHIP	4.7K	5%	1/10W
R376	1-216-065-91	RES,CHIP	4.7K	5%	1/10W
R377	1-216-065-91	RES,CHIP	4.7K	5%	1/10W
R378	1-216-065-91	RES,CHIP	4.7K	5%	1/10W
R379	1-216-025-91	RES,CHIP	100	5%	1/10W
R380	1-216-663-11	METAL CHIP	3.3K	0.50%	1/10W
R381	1-216-065-91	RES,CHIP	4.7K	5%	1/10W
R382	1-216-065-91	RES,CHIP	4.7K	5%	1/10W
R383	1-216-057-00	RES,CHIP	2.2K	5%	1/10W
R401	1-216-025-91	RES,CHIP	100	5%	1/10W
R402	1-216-025-91	RES,CHIP	100	5%	1/10W
R403	1-216-025-91	RES,CHIP	100	5%	1/10W
R404	1-216-667-11	METAL CHIP	4.7K	0.50%	1/10W
R405	1-216-667-11	METAL CHIP	4.7K	0.50%	1/10W
R406	1-216-025-91	RES,CHIP	100	5%	1/10W
R407	1-216-673-11	METAL CHIP	8.2K	0.50%	1/10W
R408	1-216-659-11	METAL CHIP	2.2K	0.50%	1/10W
R409	1-216-025-91	RES,CHIP	100	5%	1/10W
R410	1-216-025-91	RES,CHIP	100	5%	1/10W
R411	1-216-025-91	RES,CHIP	100	5%	1/10W
R412	1-216-025-91	RES,CHIP	100	5%	1/10W
R413	1-216-025-91	RES,CHIP	100	5%	1/10W
R414	1-216-661-11	METAL CHIP	2.7K	0.50%	1/10W
R415	1-216-661-11	METAL CHIP	2.7K	0.50%	1/10W
R417	1-216-675-11	METAL CHIP	10K	0.50%	1/10W
R418	1-216-675-11	METAL CHIP	10K	0.50%	1/10W
R419	1-216-671-11	METAL CHIP	6.8K	0.50%	1/10W
R420	1-216-675-11	METAL CHIP	10K	0.50%	1/10W
R421	1-216-681-11	METAL CHIP	18K	0.50%	1/10W
R422	1-216-675-11	METAL CHIP	10K	0.50%	1/10W
R423	1-216-659-11	METAL CHIP	2.2K	0.50%	1/10W
R424	1-216-659-11	METAL CHIP	2.2K	0.50%	1/10W
R425	1-216-065-91	RES,CHIP	4.7K	5%	1/10W
R426	1-216-025-91	RES,CHIP	100	5%	1/10W
R427	1-216-659-11	METAL CHIP	2.2K	0.50%	1/10W
R428	1-216-643-11	METAL CHIP	470	0.50%	1/10W
R429	1-216-687-11	METAL CHIP	33K	0.50%	1/10W
R430	1-216-057-00	RES,CHIP	2.2K	5%	1/10W
R431	1-216-065-91	RES,CHIP	4.7K	5%	1/10W
R432	1-216-025-91	RES,CHIP	100	5%	1/10W
R433	1-216-097-91	RES,CHIP	100K	5%	1/10W
R434	1-216-065-91	RES,CHIP	4.7K	5%	1/10W
R435	1-216-667-11	METAL CHIP	4.7K	0.50%	1/10W
R436	1-216-057-00	RES,CHIP	2.2K	5%	1/10W
R437	1-216-065-91	RES,CHIP	4.7K	5%	1/10W
R438	1-216-659-11	METAL CHIP	2.2K	0.50%	1/10W
R439	1-216-025-91	RES,CHIP	100	5%	1/10W
R440	1-216-681-11	METAL CHIP	18K	0.50%	1/10W
R441	1-216-025-91	RES,CHIP	100	5%	1/10W
R442	1-216-025-91	RES,CHIP	100	5%	1/10W
R451	1-216-061-00	RES,CHIP	3.3K	5%	1/10W
R452	1-216-049-91	RES,CHIP	1K	5%	1/10W
R453	1-216-677-11	METAL CHIP	12K	0.50%	1/10W
R454	1-216-061-00	RES,CHIP	3.3K	5%	1/10W
R455	1-216-663-11	METAL CHIP	3.3K	0.50%	1/10W
R456	1-216-049-91	RES,CHIP	1K	5%	1/10W
R457	1-216-683-11	METAL CHIP	22K	0.50%	1/10W
R458	1-216-692-11	METAL CHIP	51K	0.50%	1/10W
R459	1-216-025-91	RES,CHIP	100	5%	1/10W
R460	1-216-699-11	METAL CHIP	100K	0.50%	1/10W
R462	1-216-025-91	RES,CHIP	100	5%	1/10W
R463	1-216-025-91	RES,CHIP	100	5%	1/10W
R464	1-216-025-91	RES,CHIP	100	5%	1/10W
R465	1-216-025-91	RES,CHIP	100	5%	1/10W
R466	1-216-025-91	RES,CHIP	100	5%	1/10W

<VARIABLE RESISTOR>

RV101	1-238-787-11	RES, ADJ, CERMET 10K	
RV102	1-238-789-11	RES, ADJ, CERMET 50K	
RV103	1-238-790-11	RES, ADJ, CERMET 100K	
RV104	1-238-787-11	RES, ADJ, CERMET 10K	
RV105	1-238-785-21	RES, ADJ, CERMET 2K	
RV301	1-238-784-11	RES, ADJ, CERMET 1K	
RV302	1-238-787-11	RES, ADJ, CERMET 10K	
RV303	1-238-783-11	RES, ADJ, CERMET 500	
RV402	1-238-787-11	RES, ADJ, CERMET 10K	
RV403	1-238-787-11	RES, ADJ, CERMET 10K	

<SWITCH>

S101	1-570-865-11	SWITCH, SLIDE	
S102	1-570-865-11	SWITCH, SLIDE	

<TEST PIN>

TP101	* 1-537-864-11	PIN, POST	
TP102	* 1-537-864-11	PIN, POST	
TP103	* 1-537-864-11	PIN, POST	
TP104	* 1-537-864-11	PIN, POST	
TP105	* 1-537-864-11	PIN, POST	
TP106	* 1-537-864-11	PIN, POST	
TP107	* 1-537-864-11	PIN, POST	
TP301	* 1-537-864-11	PIN, POST	
TP401	* 1-537-864-11	PIN, POST	
TP402	* 1-537-864-11	PIN, POST	
TP403	* 1-537-864-11	PIN, POST	

****

* A-1346-775-A DD COMPLETE PC BOARD
****

<CAPACITOR>

C101	1-163-031-11	CERAMIC CHIP 0.01μF	50V
C102	1-163-031-11	CERAMIC CHIP 0.01μF	50V
C103	1-163-031-11	CERAMIC CHIP 0.01μF	50V
C104	1-163-031-11	CERAMIC CHIP 0.01μF	50V
C105	1-163-031-11	CERAMIC CHIP 0.01μF	50V
C106	1-163-031-11	CERAMIC CHIP 0.01μF	50V
C107	1-163-031-11	CERAMIC CHIP 0.01μF	50V

DD

Ref.No.	Part No.	Description	Remark
C108	1-163-031-11	CERAMIC CHIP 0.01μF	50V
C109	1-163-031-11	CERAMIC CHIP 0.01μF	50V
C110	1-163-031-11	CERAMIC CHIP 0.01μF	50V
C111	1-163-031-11	CERAMIC CHIP 0.01μF	50V
C112	1-163-031-11	CERAMIC CHIP 0.01μF	50V
C113	1-163-031-11	CERAMIC CHIP 0.01μF	50V
C114	1-163-031-11	CERAMIC CHIP 0.01μF	50V
C115	1-163-031-11	CERAMIC CHIP 0.01μF	50V
C116	1-163-031-11	CERAMIC CHIP 0.01μF	50V
C117	1-163-031-11	CERAMIC CHIP 0.01μF	50V
C118	1-163-031-11	CERAMIC CHIP 0.01μF	50V
C119	1-163-031-11	CERAMIC CHIP 0.01μF	50V
C120	1-163-031-11	CERAMIC CHIP 0.01μF	50V
C121	1-163-031-11	CERAMIC CHIP 0.01μF	50V
C122	1-163-031-11	CERAMIC CHIP 0.01μF	50V
C123	1-163-031-11	CERAMIC CHIP 0.01μF	50V
C124	1-163-031-11	CERAMIC CHIP 0.01μF	50V
C125	1-163-031-11	CERAMIC CHIP 0.01μF	50V
C126	1-163-031-11	CERAMIC CHIP 0.01μF	50V
C127	1-163-031-11	CERAMIC CHIP 0.01μF	50V
C128	1-126-933-11	ELECT 100μF 20%	16V
C129	1-126-933-11	ELECT 100μF 20%	16V
C131	1-164-004-11	CERAMIC CHIP 0.1μF 10%	25V
C132	1-164-004-11	CERAMIC CHIP 0.1μF 10%	25V
C133	1-126-964-11	ELECT 10μF 20%	50V
C134	1-126-964-11	ELECT 10μF 20%	50V
C135	1-126-965-11	ELECT 22μF 20%	50V
C136	1-126-933-11	ELECT 100μF 20%	16V
C137	1-163-031-11	CERAMIC CHIP 0.01μF	50V
C138	1-126-933-11	ELECT 100μF 20%	16V
C139	1-126-964-11	ELECT 10μF 20%	50V
C140	1-126-960-11	ELECT 1μF 20%	50V
C141	1-163-031-11	CERAMIC CHIP 0.01μF	50V
C142	1-163-031-11	CERAMIC CHIP 0.01μF	50V
C143	1-109-889-11	ELECT 1μF 20%	50V
C301	1-163-031-11	CERAMIC CHIP 0.01μF	50V
C302	1-163-031-11	CERAMIC CHIP 0.01μF	50V
C303	1-163-031-11	CERAMIC CHIP 0.01μF	50V
C304	1-163-031-11	CERAMIC CHIP 0.01μF	50V
C305	1-163-031-11	CERAMIC CHIP 0.01μF	50V
C306	1-163-031-11	CERAMIC CHIP 0.01μF	50V
C307	1-163-031-11	CERAMIC CHIP 0.01μF	50V
C308	1-163-031-11	CERAMIC CHIP 0.01μF	50V
C309	1-163-031-11	CERAMIC CHIP 0.01μF	50V
C310	1-163-031-11	CERAMIC CHIP 0.01μF	50V
C311	1-163-031-11	CERAMIC CHIP 0.01μF	50V
C312	1-163-031-11	CERAMIC CHIP 0.01μF	50V
C313	1-163-031-11	CERAMIC CHIP 0.01μF	50V
C314	1-163-031-11	CERAMIC CHIP 0.01μF	50V
C315	1-163-031-11	CERAMIC CHIP 0.01μF	50V
C316	1-163-031-11	CERAMIC CHIP 0.01μF	50V
C317	1-163-031-11	CERAMIC CHIP 0.01μF	50V
C318	1-163-031-11	CERAMIC CHIP 0.01μF	50V
C319	1-163-031-11	CERAMIC CHIP 0.01μF	50V
C320	1-163-031-11	CERAMIC CHIP 0.01μF	50V
C321	1-163-031-11	CERAMIC CHIP 0.01μF	50V
C322	1-163-031-11	CERAMIC CHIP 0.01μF	50V
C323	1-163-031-11	CERAMIC CHIP 0.01μF	50V
C324	1-163-031-11	CERAMIC CHIP 0.01μF	50V
C325	1-163-031-11	CERAMIC CHIP 0.01μF	50V
C328	1-163-031-11	CERAMIC CHIP 0.01μF	50V
C329	1-163-031-11	CERAMIC CHIP 0.01μF	50V
C332	1-163-031-11	CERAMIC CHIP 0.01μF	50V
C333	1-163-031-11	CERAMIC CHIP 0.01μF	50V
C336	1-163-031-11	CERAMIC CHIP 0.01μF	50V
C337	1-163-031-11	CERAMIC CHIP 0.01μF	50V
C340	1-163-031-11	CERAMIC CHIP 0.01μF	50V
C341	1-163-031-11	CERAMIC CHIP 0.01μF	50V
C342	1-126-934-11	ELECT 220μF 20%	16V
C343	1-163-031-11	CERAMIC CHIP 0.01μF	50V
C344	1-164-346-11	CERAMIC CHIP 1μF	16V
C345	1-164-346-11	CERAMIC CHIP 1μF	16V
C346	1-164-346-11	CERAMIC CHIP 1μF	16V
C347	1-164-346-11	CERAMIC CHIP 1μF	16V
C348	1-164-346-11	CERAMIC CHIP 1μF	16V
C349	1-164-346-11	CERAMIC CHIP 1μF	16V
C450	1-163-031-11	CERAMIC CHIP 0.01μF	50V
C451	1-163-031-11	CERAMIC CHIP 0.01μF	50V
C452	1-163-031-11	CERAMIC CHIP 0.01μF	50V
C453	1-163-031-11	CERAMIC CHIP 0.01μF	50V
C454	1-163-031-11	CERAMIC CHIP 0.01μF	50V
C455	1-163-031-11	CERAMIC CHIP 0.01μF	50V
C456	1-163-031-11	CERAMIC CHIP 0.01μF	50V
C457	1-163-031-11	CERAMIC CHIP 0.01μF	50V
C458	1-163-031-11	CERAMIC CHIP 0.01μF	50V
C459	1-163-031-11	CERAMIC CHIP 0.01μF	50V
C460	1-163-031-11	CERAMIC CHIP 0.01μF	50V
C461	1-163-031-11	CERAMIC CHIP 0.01μF	50V
C462	1-163-031-11	CERAMIC CHIP 0.01μF	50V
C463	1-109-889-11	ELECT 1μF 20%	50V
	<CONNECTOR>		
CN210	* 1-778-891-11	CONNECTOR, BOARD TO BOARD	
	<DIODE>		
D101	8-719-053-18	DIODE 1SR154-400TE-25	
D102	8-719-053-18	DIODE 1SR154-400TE-25	
D103	8-719-056-76	DIODE UDZ-TE-17-3.6B	
D104	8-719-404-50	DIODE MA111-TX	
D105	8-719-404-50	DIODE MA111-TX	
D106	8-719-404-50	DIODE MA111-TX	
D301	8-719-404-50	DIODE MA111-TX	
D302	8-719-404-50	DIODE MA111-TX	
	<IC>		
IC101	8-759-326-65	IC MP7670AS-TE2	
IC102	8-759-326-65	IC MP7670AS-TE2	
IC103	8-759-326-65	IC MP7670AS-TE2	
IC104	8-759-326-65	IC MP7670AS-TE2	
IC105	8-759-326-65	IC MP7670AS-TE2	
IC106	8-759-326-65	IC MP7670AS-TE2	
IC107	8-759-326-65	IC MP7670AS-TE2	
IC108	8-759-326-65	IC MP7670AS-TE2	
IC109	8-759-326-65	IC MP7670AS-TE2	

Ref.No.	Part No.	Description			Remark
IC110	8-759-326-65	IC MP7670AS-TE2			
IC111	8-759-326-65	IC MP7670AS-TE2			
IC112	8-759-326-65	IC MP7670AS-TE2			
IC113	8-759-237-59	IC TC74HC541AF(EL)			
IC114	8-759-460-74	IC BA05FP-E2			
IC115	8-759-539-89	IC LM2990SX-5.0			
IC116	8-759-443-72	IC RH5VL43AA-T1			
IC117	8-759-908-15	IC TL431CLP			
IC118	8-759-549-40	IC AD826AR-REEL			
IC301	8-759-326-65	IC MP7670AS-TE2			
IC302	8-759-326-65	IC MP7670AS-TE2			
IC303	8-759-326-65	IC MP7670AS-TE2			
IC304	8-759-326-65	IC MP7670AS-TE2			
IC305	8-759-326-65	IC MP7670AS-TE2			
IC306	8-759-326-65	IC MP7670AS-TE2			
IC307	8-759-326-65	IC MP7670AS-TE2			
IC308	8-759-326-65	IC MP7670AS-TE2			
IC309	8-759-326-65	IC MP7670AS-TE2			
IC310	8-759-326-65	IC MP7670AS-TE2			
IC311	8-759-326-65	IC MP7670AS-TE2			
IC312	8-759-326-65	IC MP7670AS-TE2			
IC313	8-759-392-64	IC AD828AR			
IC314	8-759-392-64	IC AD828AR			
IC315	8-759-392-64	IC AD828AR			
IC316	8-759-392-64	IC AD828AR			
IC317	8-759-392-64	IC AD828AR			
IC322	8-759-443-72	IC RH5VL43AA-T1			
IC323	8-759-392-64	IC AD828AR			
IC450	8-759-326-65	IC MP7670AS-TE2			
IC451	8-759-326-65	IC MP7670AS-TE2			
IC452	8-759-326-65	IC MP7670AS-TE2			
IC453	8-759-326-65	IC MP7670AS-TE2			
IC454	8-759-326-65	IC MP7670AS-TE2			
IC455	8-759-326-65	IC MP7670AS-TE2			
	<COIL>				
L101	1-412-533-21	INDUCTOR 47μH			
L102	1-412-533-21	INDUCTOR 47μH			
	<TRANSISTOR>				
Q101	8-729-230-49	TRANSISTOR 2SC2712-YG			
Q102	1-801-806-11	TRANSISTOR DTC144EKA-T146			
	<RESISTOR>				
R101	1-216-681-11	METAL CHIP	18K	0.50%	1/10W
R102	1-216-697-91	METAL CHIP	82K	0.50%	1/10W
R103	1-216-681-11	METAL CHIP	18K	0.50%	1/10W
R104	1-216-025-91	RES,CHIP	100	5%	1/10W
R105	1-216-683-11	METAL CHIP	22K	0.50%	1/10W
R106	1-216-683-11	METAL CHIP	22K	0.50%	1/10W
R107	1-216-681-11	METAL CHIP	18K	0.50%	1/10W
R108	1-216-697-91	METAL CHIP	82K	0.50%	1/10W
R109	1-216-025-91	RES,CHIP	100	5%	1/10W
R110	1-216-697-91	METAL CHIP	82K	0.50%	1/10W
R111	1-216-687-11	METAL CHIP	33K	0.50%	1/10W
R112	1-216-671-11	METAL CHIP	6.8K	0.50%	1/10W
R113	1-216-025-91	RES,CHIP	100	5%	1/10W
R114	1-216-671-11	METAL CHIP	6.8K	0.50%	1/10W
R115	1-216-687-11	METAL CHIP	33K	0.50%	1/10W
R116	1-216-671-11	METAL CHIP	6.8K	0.50%	1/10W
R117	1-216-025-91	RES,CHIP	100	5%	1/10W
R118	1-216-687-11	METAL CHIP	33K	0.50%	1/10W
R119	1-216-695-11	METAL CHIP	68K	0.50%	1/10W
R120	1-216-675-11	METAL CHIP	10K	0.50%	1/10W
R121	1-216-695-11	METAL CHIP	68K	0.50%	1/10W
R122	1-216-025-91	RES,CHIP	100	5%	1/10W
R123	1-216-673-11	METAL CHIP	8.2K	0.50%	1/10W
R124	1-216-673-11	METAL CHIP	8.2K	0.50%	1/10W
R125	1-216-673-11	METAL CHIP	8.2K	0.50%	1/10W
R126	1-216-675-11	METAL CHIP	10K	0.50%	1/10W
R127	1-216-695-11	METAL CHIP	68K	0.50%	1/10W
R128	1-216-675-11	METAL CHIP	10K	0.50%	1/10W
R129	1-216-675-11	METAL CHIP	10K	0.50%	1/10W
R130	1-216-675-11	METAL CHIP	10K	0.50%	1/10W
R131	1-216-025-91	RES,CHIP	100	5%	1/10W
R132	1-216-671-11	METAL CHIP	6.8K	0.50%	1/10W
R133	1-216-687-11	METAL CHIP	33K	0.50%	1/10W
R134	1-216-671-11	METAL CHIP	6.8K	0.50%	1/10W
R135	1-216-025-91	RES,CHIP	100	5%	1/10W
R136	1-216-671-11	METAL CHIP	6.8K	0.50%	1/10W
R137	1-216-691-11	METAL CHIP	47K	0.50%	1/10W
R138	1-216-671-11	METAL CHIP	6.8K	0.50%	1/10W
R139	1-216-687-11	METAL CHIP	33K	0.50%	1/10W
R140	1-216-025-91	RES,CHIP	100	5%	1/10W
R141	1-216-687-11	METAL CHIP	33K	0.50%	1/10W
R142	1-216-671-11	METAL CHIP	6.8K	0.50%	1/10W
R143	1-216-691-11	METAL CHIP	47K	0.50%	1/10W
R144	1-216-671-11	METAL CHIP	6.8K	0.50%	1/10W
R145	1-216-025-91	RES,CHIP	100	5%	1/10W
R146	1-216-651-11	METAL CHIP	1K	0.50%	1/10W
R147	1-216-665-11	METAL CHIP	3.9K	0.50%	1/10W
R148	1-216-679-11	METAL CHIP	15K	0.50%	1/10W
R149	1-216-691-11	METAL CHIP	47K	0.50%	1/10W
R150	1-216-025-91	RES,CHIP	100	5%	1/10W
R151	1-216-687-11	METAL CHIP	33K	0.50%	1/10W
R152	1-216-651-11	METAL CHIP	1K	0.50%	1/10W
R153	1-216-671-11	METAL CHIP	6.8K	0.50%	1/10W
R154	1-216-653-11	METAL CHIP	1.2K	0.50%	1/10W
R155	1-216-025-91	RES,CHIP	100	5%	1/10W
R156	1-216-653-11	METAL CHIP	1.2K	0.50%	1/10W
R157	1-216-671-11	METAL CHIP	6.8K	0.50%	1/10W
R158	1-216-653-11	METAL CHIP	1.2K	0.50%	1/10W
R159	1-216-665-11	METAL CHIP	3.9K	0.50%	1/10W
R160	1-216-025-91	RES,CHIP	100	5%	1/10W
R161	1-216-025-91	RES,CHIP	100	5%	1/10W
R162	1-216-671-11	METAL CHIP	6.8K	0.50%	1/10W
R163	1-216-683-11	METAL CHIP	22K	0.50%	1/10W
R164	1-216-683-11	METAL CHIP	22K	0.50%	1/10W
R165	1-216-683-11	METAL CHIP	22K	0.50%	1/10W
R166	1-216-025-91	RES,CHIP	100	5%	1/10W
R167	1-216-681-11	METAL CHIP	18K	0.50%	1/10W
R168	1-216-025-91	RES,CHIP	100	5%	1/10W
R169	1-216-025-91	RES,CHIP	100	5%	1/10W
R170	1-216-025-91	RES,CHIP	100	5%	1/10W

DD

Ref.No.	Part No.	Description			Remark
R171	1-216-659-11	METAL CHIP	2.2K	0.50%	1/10W
R172	1-216-659-11	METAL CHIP	2.2K	0.50%	1/10W
R173	1-216-659-11	METAL CHIP	2.2K	0.50%	1/10W
R174	1-216-025-91	RES,CHIP	100	5%	1/10W
R175	1-216-683-11	METAL CHIP	22K	0.50%	1/10W
R176	1-216-683-11	METAL CHIP	22K	0.50%	1/10W
R177	1-216-683-11	METAL CHIP	22K	0.50%	1/10W
R178	1-216-025-91	RES,CHIP	100	5%	1/10W
R179	1-216-025-91	RES,CHIP	100	5%	1/10W
R180	1-216-683-11	METAL CHIP	22K	0.50%	1/10W
R181	1-216-683-11	METAL CHIP	22K	0.50%	1/10W
R182	1-216-683-11	METAL CHIP	22K	0.50%	1/10W
R183	1-216-659-11	METAL CHIP	2.2K	0.50%	1/10W
R184	1-216-659-11	METAL CHIP	2.2K	0.50%	1/10W
R185	1-216-659-11	METAL CHIP	2.2K	0.50%	1/10W
R186	1-216-025-91	RES,CHIP	100	5%	1/10W
R187	1-216-667-11	METAL CHIP	4.7K	0.50%	1/10W
R188	1-216-025-91	RES,CHIP	100	5%	1/10W
R189	1-216-667-11	METAL CHIP	4.7K	0.50%	1/10W
R190	1-216-675-11	METAL CHIP	10K	0.50%	1/10W
R191	1-216-675-11	METAL CHIP	10K	0.50%	1/10W
R192	1-216-025-91	RES,CHIP	100	5%	1/10W
R193	1-216-025-91	RES,CHIP	100	5%	1/10W
R194	1-216-675-11	METAL CHIP	10K	0.50%	1/10W
R195	1-216-675-11	METAL CHIP	10K	0.50%	1/10W
R196	1-216-675-11	METAL CHIP	10K	0.50%	1/10W
R197	1-216-667-11	METAL CHIP	4.7K	0.50%	1/10W
R198	1-216-025-91	RES,CHIP	100	5%	1/10W
R199	1-216-675-11	METAL CHIP	10K	0.50%	1/10W
R200	1-216-675-11	METAL CHIP	10K	0.50%	1/10W
R201	1-216-675-11	METAL CHIP	10K	0.50%	1/10W
R202	1-216-025-91	RES,CHIP	100	5%	1/10W
R203	1-216-025-91	RES,CHIP	100	5%	1/10W
R204	1-216-675-11	METAL CHIP	10K	0.50%	1/10W
R205	1-216-675-11	METAL CHIP	10K	0.50%	1/10W
R206	1-216-675-11	METAL CHIP	10K	0.50%	1/10W
R207	1-216-025-91	RES,CHIP	100	5%	1/10W
R208	1-216-675-11	METAL CHIP	10K	0.50%	1/10W
R209	1-216-679-11	METAL CHIP	15K	0.50%	1/10W
R210	1-216-679-11	METAL CHIP	15K	0.50%	1/10W
R211	1-216-025-91	RES,CHIP	100	5%	1/10W
R212	1-216-025-91	RES,CHIP	100	5%	1/10W
R213	1-216-679-11	METAL CHIP	15K	0.50%	1/10W
R214	1-216-679-11	METAL CHIP	15K	0.50%	1/10W
R215	1-216-679-11	METAL CHIP	15K	0.50%	1/10W
R216	1-216-025-91	RES,CHIP	100	5%	1/10W
R217	1-216-679-11	METAL CHIP	15K	0.50%	1/10W
R218	1-216-675-11	METAL CHIP	10K	0.50%	1/10W
R219	1-216-675-11	METAL CHIP	10K	0.50%	1/10W
R220	1-216-025-91	RES,CHIP	100	5%	1/10W
R221	1-216-025-91	RES,CHIP	100	5%	1/10W
R222	1-216-675-11	METAL CHIP	10K	0.50%	1/10W
R223	1-216-675-11	METAL CHIP	10K	0.50%	1/10W
R224	1-216-675-11	METAL CHIP	10K	0.50%	1/10W
R225	1-216-025-91	RES,CHIP	100	5%	1/10W
R226	1-216-675-11	METAL CHIP	10K	0.50%	1/10W
R227	1-216-669-11	METAL CHIP	5.6K	0.50%	1/10W
R228	1-216-065-91	RES,CHIP	4.7K	5%	1/10W
R229	1-216-065-91	RES,CHIP	4.7K	5%	1/10W
R230	1-216-699-11	METAL CHIP	100K	0.50%	1/10W
R231	1-216-033-00	RES,CHIP	220	5%	1/10W
R232	1-216-683-11	METAL CHIP	22K	0.50%	1/10W
R233	1-216-683-11	METAL CHIP	22K	0.50%	1/10W
R234	1-216-683-11	METAL CHIP	22K	0.50%	1/10W
R235	1-216-681-11	METAL CHIP	18K	0.50%	1/10W
R236	1-216-025-91	RES,CHIP	100	5%	1/10W
R237	1-216-025-91	RES,CHIP	100	5%	1/10W
R238	1-216-675-11	METAL CHIP	10K	0.50%	1/10W
R239	1-216-675-11	METAL CHIP	10K	0.50%	1/10W
R240	1-216-675-11	METAL CHIP	10K	0.50%	1/10W
R241	1-216-677-11	METAL CHIP	12K	0.50%	1/10W
R242	1-216-677-11	METAL CHIP	12K	0.50%	1/10W
R243	1-216-677-11	METAL CHIP	12K	0.50%	1/10W
R244	1-216-681-11	METAL CHIP	18K	0.50%	1/10W
R245	1-216-681-11	METAL CHIP	18K	0.50%	1/10W
R246	1-216-681-11	METAL CHIP	18K	0.50%	1/10W
R247	1-218-756-11	METAL CHIP	150K	0.50%	1/10W
R248	1-218-756-11	METAL CHIP	150K	0.50%	1/10W
R249	1-218-756-11	METAL CHIP	150K	0.50%	1/10W
R250	1-216-695-11	METAL CHIP	68K	0.50%	1/10W
R251	1-216-695-11	METAL CHIP	68K	0.50%	1/10W
R252	1-216-695-11	METAL CHIP	68K	0.50%	1/10W
R253	1-216-681-11	METAL CHIP	18K	0.50%	1/10W
R254	1-216-681-11	METAL CHIP	18K	0.50%	1/10W
R255	1-216-681-11	METAL CHIP	18K	0.50%	1/10W
R256	1-247-807-31	CARBON	100	5%	1/4W
R257	1-247-807-31	CARBON	100	5%	1/4W
R258	1-216-667-11	METAL CHIP	4.7K	0.50%	1/10W
R259	1-216-667-11	METAL CHIP	4.7K	0.50%	1/10W
R260	1-216-675-11	METAL CHIP	10K	0.50%	1/10W
R261	1-216-675-11	METAL CHIP	10K	0.50%	1/10W
R262	1-216-675-11	METAL CHIP	10K	0.50%	1/10W
R263	1-216-675-11	METAL CHIP	10K	0.50%	1/10W
R264	1-216-683-11	METAL CHIP	22K	0.50%	1/10W
R265	1-216-683-11	METAL CHIP	22K	0.50%	1/10W
R266	1-216-675-11	METAL CHIP	10K	0.50%	1/10W
R267	1-216-675-11	METAL CHIP	10K	0.50%	1/10W
R268	1-216-025-91	RES,CHIP	100	5%	1/10W
R269	1-216-681-11	METAL CHIP	18K	0.50%	1/10W
R270	1-216-681-11	METAL CHIP	18K	0.50%	1/10W
R271	1-216-681-11	METAL CHIP	18K	0.50%	1/10W
R272	1-247-807-31	CARBON	100	5%	1/4W
R273	1-216-025-91	RES,CHIP	100	5%	1/10W
R274	1-216-667-11	METAL CHIP	4.7K	0.50%	1/10W
R276	1-216-669-11	METAL CHIP	5.6K	0.50%	1/10W
R277	1-216-651-11	METAL CHIP	1K	0.50%	1/10W
R278	1-216-653-11	METAL CHIP	1.2K	0.50%	1/10W
R279	1-216-659-11	METAL CHIP	2.2K	0.50%	1/10W
R280	1-216-687-11	METAL CHIP	33K	0.50%	1/10W
R281	1-216-661-11	METAL CHIP	2.7K	0.50%	1/10W
R301	1-216-683-11	METAL CHIP	22K	0.50%	1/10W
R302	1-216-683-11	METAL CHIP	22K	0.50%	1/10W
R303	1-216-683-11	METAL CHIP	22K	0.50%	1/10W
R304	1-216-025-91	RES,CHIP	100	5%	1/10W
R305	1-216-683-11	METAL CHIP	22K	0.50%	1/10W
R306	1-216-683-11	METAL CHIP	22K	0.50%	1/10W
R307	1-216-683-11	METAL CHIP	22K	0.50%	1/10W

Ref.No.	Part No.	Description			Remark
R308	1-216-025-91	RES,CHIP	100	5%	1/10W
R309	1-216-687-11	METAL CHIP	33K	0.50%	1/10W
R310	1-216-687-11	METAL CHIP	33K	0.50%	1/10W
R311	1-216-687-11	METAL CHIP	33K	0.50%	1/10W
R312	1-216-025-91	RES,CHIP	100	5%	1/10W
R313	1-216-687-11	METAL CHIP	33K	0.50%	1/10W
R314	1-216-687-11	METAL CHIP	33K	0.50%	1/10W
R315	1-216-687-11	METAL CHIP	33K	0.50%	1/10W
R316	1-216-025-91	RES,CHIP	100	5%	1/10W
R317	1-216-687-11	METAL CHIP	33K	0.50%	1/10W
R318	1-216-687-11	METAL CHIP	33K	0.50%	1/10W
R319	1-216-687-11	METAL CHIP	33K	0.50%	1/10W
R320	1-216-025-91	RES,CHIP	100	5%	1/10W
R321	1-216-687-11	METAL CHIP	33K	0.50%	1/10W
R322	1-216-687-11	METAL CHIP	33K	0.50%	1/10W
R323	1-216-687-11	METAL CHIP	33K	0.50%	1/10W
R324	1-216-025-91	RES,CHIP	100	5%	1/10W
R325	1-216-687-11	METAL CHIP	33K	0.50%	1/10W
R326	1-216-687-11	METAL CHIP	33K	0.50%	1/10W
R327	1-216-687-11	METAL CHIP	33K	0.50%	1/10W
R328	1-216-025-91	RES,CHIP	100	5%	1/10W
R329	1-216-687-11	METAL CHIP	33K	0.50%	1/10W
R330	1-216-687-11	METAL CHIP	33K	0.50%	1/10W
R331	1-216-687-11	METAL CHIP	33K	0.50%	1/10W
R332	1-216-687-11	METAL CHIP	33K	0.50%	1/10W
R333	1-216-025-91	RES,CHIP	100	5%	1/10W
R334	1-216-687-11	METAL CHIP	33K	0.50%	1/10W
R335	1-216-687-11	METAL CHIP	33K	0.50%	1/10W
R336	1-216-687-11	METAL CHIP	33K	0.50%	1/10W
R337	1-216-687-11	METAL CHIP	33K	0.50%	1/10W
R338	1-216-025-91	RES,CHIP	100	5%	1/10W
R339	1-216-025-91	RES,CHIP	100	5%	1/10W
R340	1-216-687-11	METAL CHIP	33K	0.50%	1/10W
R341	1-216-687-11	METAL CHIP	33K	0.50%	1/10W
R342	1-216-687-11	METAL CHIP	33K	0.50%	1/10W
R343	1-216-687-11	METAL CHIP	33K	0.50%	1/10W
R344	1-216-025-91	RES,CHIP	100	5%	1/10W
R345	1-216-687-11	METAL CHIP	33K	0.50%	1/10W
R346	1-216-687-11	METAL CHIP	33K	0.50%	1/10W
R347	1-216-687-11	METAL CHIP	33K	0.50%	1/10W
R348	1-216-687-11	METAL CHIP	33K	0.50%	1/10W
R349	1-216-025-91	RES,CHIP	100	5%	1/10W
R350	1-216-025-91	RES,CHIP	100	5%	1/10W
R351	1-216-025-91	RES,CHIP	100	5%	1/10W
R352	1-216-687-11	METAL CHIP	33K	0.50%	1/10W
R353	1-216-687-11	METAL CHIP	33K	0.50%	1/10W
R354	1-216-687-11	METAL CHIP	33K	0.50%	1/10W
R355	1-216-687-11	METAL CHIP	33K	0.50%	1/10W
R356	1-216-025-91	RES,CHIP	100	5%	1/10W
R357	1-216-687-11	METAL CHIP	33K	0.50%	1/10W
R358	1-216-683-11	METAL CHIP	22K	0.50%	1/10W
R359	1-216-683-11	METAL CHIP	22K	0.50%	1/10W
R360	1-216-683-11	METAL CHIP	22K	0.50%	1/10W
R361	1-216-025-91	RES,CHIP	100	5%	1/10W
R362	1-216-683-11	METAL CHIP	22K	0.50%	1/10W
R363	1-216-683-11	METAL CHIP	22K	0.50%	1/10W
R364	1-216-683-11	METAL CHIP	22K	0.50%	1/10W
R365	1-216-025-91	RES,CHIP	100	5%	1/10W
R366	1-216-681-11	METAL CHIP	18K	0.50%	1/10W
R367	1-216-681-11	METAL CHIP	18K	0.50%	1/10W
R368	1-216-681-11	METAL CHIP	18K	0.50%	1/10W
R369	1-216-025-91	RES,CHIP	100	5%	1/10W
R370	1-216-681-11	METAL CHIP	18K	0.50%	1/10W
R371	1-216-681-11	METAL CHIP	18K	0.50%	1/10W
R372	1-216-681-11	METAL CHIP	18K	0.50%	1/10W
R373	1-216-025-91	RES,CHIP	100	5%	1/10W
R374	1-216-681-11	METAL CHIP	18K	0.50%	1/10W
R375	1-216-681-11	METAL CHIP	18K	0.50%	1/10W
R376	1-216-681-11	METAL CHIP	18K	0.50%	1/10W
R377	1-216-025-91	RES,CHIP	100	5%	1/10W
R378	1-216-681-11	METAL CHIP	18K	0.50%	1/10W
R379	1-216-681-11	METAL CHIP	18K	0.50%	1/10W
R380	1-216-681-11	METAL CHIP	18K	0.50%	1/10W
R381	1-216-025-91	RES,CHIP	100	5%	1/10W
R382	1-216-681-11	METAL CHIP	18K	0.50%	1/10W
R383	1-216-681-11	METAL CHIP	18K	0.50%	1/10W
R384	1-216-681-11	METAL CHIP	18K	0.50%	1/10W
R385	1-216-025-91	RES,CHIP	100	5%	1/10W
R386	1-216-681-11	METAL CHIP	18K	0.50%	1/10W
R387	1-216-681-11	METAL CHIP	18K	0.50%	1/10W
R388	1-216-681-11	METAL CHIP	18K	0.50%	1/10W
R389	1-216-025-91	RES,CHIP	100	5%	1/10W
R390	1-216-681-11	METAL CHIP	18K	0.50%	1/10W
R391	1-216-681-11	METAL CHIP	18K	0.50%	1/10W
R392	1-216-681-11	METAL CHIP	18K	0.50%	1/10W
R393	1-216-025-91	RES,CHIP	100	5%	1/10W
R394	1-216-681-11	METAL CHIP	18K	0.50%	1/10W
R395	1-216-681-11	METAL CHIP	18K	0.50%	1/10W
R396	1-216-681-11	METAL CHIP	18K	0.50%	1/10W
R397	1-216-025-91	RES,CHIP	100	5%	1/10W
R398	1-216-683-11	METAL CHIP	22K	0.50%	1/10W
R399	1-216-683-11	METAL CHIP	22K	0.50%	1/10W
R400	1-216-683-11	METAL CHIP	22K	0.50%	1/10W
R401	1-216-025-91	RES,CHIP	100	5%	1/10W
R402	1-216-683-11	METAL CHIP	22K	0.50%	1/10W
R403	1-216-683-11	METAL CHIP	22K	0.50%	1/10W
R404	1-216-683-11	METAL CHIP	22K	0.50%	1/10W
R405	1-216-025-91	RES,CHIP	100	5%	1/10W
R406	1-216-665-11	METAL CHIP	3.9K	0.50%	1/10W
R407	1-216-651-11	METAL CHIP	1K	0.50%	1/10W
R408	1-216-665-11	METAL CHIP	3.9K	0.50%	1/10W
R409	1-216-651-11	METAL CHIP	1K	0.50%	1/10W
R410	1-216-665-11	METAL CHIP	3.9K	0.50%	1/10W
R411	1-216-651-11	METAL CHIP	1K	0.50%	1/10W
R412	1-216-665-11	METAL CHIP	3.9K	0.50%	1/10W
R413	1-216-651-11	METAL CHIP	1K	0.50%	1/10W
R414	1-216-665-11	METAL CHIP	3.9K	0.50%	1/10W
R415	1-216-651-11	METAL CHIP	1K	0.50%	1/10W
R416	1-216-665-11	METAL CHIP	3.9K	0.50%	1/10W
R417	1-216-651-11	METAL CHIP	1K	0.50%	1/10W
R418	1-216-667-11	METAL CHIP	4.7K	0.50%	1/10W
R419	1-216-651-11	METAL CHIP	1K	0.50%	1/10W
R420	1-216-667-11	METAL CHIP	4.7K	0.50%	1/10W
R421	1-216-651-11	METAL CHIP	1K	0.50%	1/10W
R422	1-216-667-11	METAL CHIP	4.7K	0.50%	1/10W
R423	1-216-651-11	METAL CHIP	1K	0.50%	1/10W
R424	1-216-667-11	METAL CHIP	4.7K	0.50%	1/10W

DD DE

Ref.No.	Part No.	Description			Remark
R425	1-216-699-11	METAL CHIP	100K	0.50%	1/10W
R432	1-216-659-11	METAL CHIP	2.2K	0.50%	1/10W
R433	1-216-659-11	METAL CHIP	2.2K	0.50%	1/10W
R434	1-216-659-11	METAL CHIP	2.2K	0.50%	1/10W
R450	1-216-681-11	METAL CHIP	18K	0.50%	1/10W
R451	1-216-683-11	METAL CHIP	22K	0.50%	1/10W
R452	1-216-683-11	METAL CHIP	22K	0.50%	1/10W
R453	1-216-683-11	METAL CHIP	22K	0.50%	1/10W
R454	1-216-681-11	METAL CHIP	18K	0.50%	1/10W
R455	1-216-025-91	RES,CHIP	100	5%	1/10W
R456	1-216-683-11	METAL CHIP	22K	0.50%	1/10W
R457	1-216-683-11	METAL CHIP	22K	0.50%	1/10W
R458	1-216-683-11	METAL CHIP	22K	0.50%	1/10W
R459	1-216-025-91	RES,CHIP	100	5%	1/10W
R460	1-216-675-11	METAL CHIP	10K	0.50%	1/10W
R461	1-216-675-11	METAL CHIP	10K	0.50%	1/10W
R462	1-216-675-11	METAL CHIP	10K	0.50%	1/10W
R463	1-216-025-91	RES,CHIP	100	5%	1/10W
R464	1-216-677-11	METAL CHIP	12K	0.50%	1/10W
R465	1-216-677-11	METAL CHIP	12K	0.50%	1/10W
R466	1-216-677-11	METAL CHIP	12K	0.50%	1/10W
R467	1-216-025-91	RES,CHIP	100	5%	1/10W
R468	1-216-675-11	METAL CHIP	10K	0.50%	1/10W
R469	1-216-675-11	METAL CHIP	10K	0.50%	1/10W
R470	1-216-675-11	METAL CHIP	10K	0.50%	1/10W
R471	1-216-025-91	RES,CHIP	100	5%	1/10W
R472	1-216-677-11	METAL CHIP	12K	0.50%	1/10W
R473	1-216-677-11	METAL CHIP	12K	0.50%	1/10W
R474	1-216-677-11	METAL CHIP	12K	0.50%	1/10W
R475	1-216-025-91	RES,CHIP	100	5%	1/10W
R476	1-216-675-11	METAL CHIP	10K	0.50%	1/10W
R477	1-216-675-11	METAL CHIP	10K	0.50%	1/10W
R478	1-216-675-11	METAL CHIP	10K	0.50%	1/10W
R479	1-216-025-91	RES,CHIP	100	5%	1/10W
R480	1-216-677-11	METAL CHIP	12K	0.50%	1/10W
R481	1-216-677-11	METAL CHIP	12K	0.50%	1/10W
R482	1-216-677-11	METAL CHIP	12K	0.50%	1/10W
R483	1-216-025-91	RES,CHIP	100	5%	1/10W
R484	1-216-675-11	METAL CHIP	10K	0.50%	1/10W
R485	1-216-675-11	METAL CHIP	10K	0.50%	1/10W
R486	1-216-675-11	METAL CHIP	10K	0.50%	1/10W
R487	1-216-025-91	RES,CHIP	100	5%	1/10W
R489	1-216-677-11	METAL CHIP	12K	0.50%	1/10W
R490	1-216-677-11	METAL CHIP	12K	0.50%	1/10W
R491	1-216-677-11	METAL CHIP	12K	0.50%	1/10W
R492	1-216-025-91	RES,CHIP	100	5%	1/10W
R493	1-216-683-11	METAL CHIP	22K	0.50%	1/10W
R494	1-216-683-11	METAL CHIP	22K	0.50%	1/10W
R495	1-216-683-11	METAL CHIP	22K	0.50%	1/10W
R496	1-216-025-91	RES,CHIP	100	5%	1/10W
R497	1-216-683-11	METAL CHIP	22K	0.50%	1/10W
R498	1-216-683-11	METAL CHIP	22K	0.50%	1/10W
R499	1-216-683-11	METAL CHIP	22K	0.50%	1/10W
R500	1-216-025-91	RES,CHIP	100	5%	1/10W
R501	1-247-807-31	CARBON	100	5%	1/4W
R502	1-247-807-31	CARBON	100	5%	1/4W
R503	1-247-807-31	CARBON	100	5%	1/4W
R504	1-247-807-31	CARBON	100	5%	1/4W
R505	1-247-807-31	CARBON	100	5%	1/4W
R506	1-247-807-31	CARBON	100	5%	1/4W
R507	1-247-807-31	CARBON	100	5%	1/4W
R508	1-247-807-31	CARBON	100	5%	1/4W
R509	1-247-807-31	CARBON	100	5%	1/4W
R510	1-216-669-11	METAL CHIP	5.6K	0.50%	1/10W
R511	1-216-669-11	METAL CHIP	5.6K	0.50%	1/10W
R512	1-216-669-11	METAL CHIP	5.6K	0.50%	1/10W
R513	1-216-669-11	METAL CHIP	5.6K	0.50%	1/10W
R514	1-216-669-11	METAL CHIP	5.6K	0.50%	1/10W
R515	1-216-669-11	METAL CHIP	5.6K	0.50%	1/10W
R516	1-216-669-11	METAL CHIP	5.6K	0.50%	1/10W
R517	1-216-669-11	METAL CHIP	5.6K	0.50%	1/10W
R518	1-216-669-11	METAL CHIP	5.6K	0.50%	1/10W
R519	1-216-669-11	METAL CHIP	5.6K	0.50%	1/10W
R520	1-216-669-11	METAL CHIP	5.6K	0.50%	1/10W
R521	1-216-669-11	METAL CHIP	5.6K	0.50%	1/10W
R522	1-216-683-11	METAL CHIP	22K	0.50%	1/10W
R523	1-216-683-11	METAL CHIP	22K	0.50%	1/10W
R524	1-216-683-11	METAL CHIP	22K	0.50%	1/10W
R525	1-216-683-11	METAL CHIP	22K	0.50%	1/10W
R526	1-216-683-11	METAL CHIP	22K	0.50%	1/10W
R527	1-216-683-11	METAL CHIP	22K	0.50%	1/10W
R528	1-216-673-11	METAL CHIP	8.2K	0.50%	1/10W
R529	1-216-673-11	METAL CHIP	8.2K	0.50%	1/10W
R530	1-216-673-11	METAL CHIP	8.2K	0.50%	1/10W
R531	1-216-025-91	RES,CHIP	100	5%	1/10W
R532	1-216-025-91	RES,CHIP	100	5%	1/10W
R533	1-216-661-11	METAL CHIP	2.7K	0.50%	1/10W

<VARIABLE RESISTOR>

RV301	1-238-801-11	RES, ADJ, CERMET 5K
RV302	1-238-801-11	RES, ADJ, CERMET 5K
RV303	1-238-801-11	RES, ADJ, CERMET 5K
RV304	1-238-801-11	RES, ADJ, CERMET 5K
RV305	1-238-801-11	RES, ADJ, CERMET 5K
RV306	1-238-801-11	RES, ADJ, CERMET 5K

****

* A-1346-776-A DE COMPLETE PC BOARD
****

* 7-322-065-72 RUBBER, RTV (SE-9168) (130G)

<CAPACITOR>

C1	1-164-004-11	CERAMIC CHIP	0.1μF	10%	25V
C2	1-126-933-11	ELECT	100μF	20%	16V
C3	1-164-004-11	CERAMIC CHIP	0.1μF	10%	25V
C4	1-126-933-11	ELECT	100μF	20%	16V
C6	1-164-004-11	CERAMIC CHIP	0.1μF	10%	25V
C7	1-126-933-11	ELECT	100μF	20%	16V
C8	1-126-933-11	ELECT	100μF	20%	16V
C9	1-164-004-11	CERAMIC CHIP	0.1μF	10%	25V
C10	1-104-664-11	ELECT	47μF	20%	16V
C11	1-163-031-11	CERAMIC CHIP	0.01μF		50V

Ref.No.	Part No.	Description	Remark
C12	1-163-031-11	CERAMIC CHIP 0.01µF	50V
C13	1-104-664-11	ELECT 47µF 20%	16V
C14	1-104-664-11	ELECT 47µF 20%	16V
C15	1-163-031-11	CERAMIC CHIP 0.01µF	50V
C16	1-104-665-11	ELECT 100µF 20%	25V
C17	1-164-004-11	CERAMIC CHIP 0.1µF 10%	25V
C18	1-126-933-11	ELECT 100µF 20%	16V
C19	1-164-004-11	CERAMIC CHIP 0.1µF 10%	25V
C21	1-126-933-11	ELECT 100µF 20%	16V
C22	1-104-665-11	ELECT 100µF 20%	25V
C23	1-126-933-11	ELECT 100µF 20%	16V
C24	1-163-031-11	CERAMIC CHIP 0.01µF	50V
C25	1-126-961-11	ELECT 2.2µF 20%	50V
C26	1-163-251-11	CERAMIC CHIP 100PF 5%	50V
C27	1-126-960-11	ELECT 1µF 20%	50V
C28	1-126-960-11	ELECT 1µF 20%	50V
C29	1-136-153-00	FILM 0.01µF 5%	50V
C30	1-104-664-11	ELECT 47µF 20%	16V
C31	1-126-964-11	ELECT 10µF 20%	50V
C32	1-163-251-11	CERAMIC CHIP 100PF 5%	50V
C33	1-126-960-11	ELECT 1µF 20%	50V
C34	1-136-153-00	FILM 0.01µF 5%	50V
C35	1-104-664-11	ELECT 47µF 20%	16V
C36	1-163-031-11	CERAMIC CHIP 0.01µF	50V
C37	1-104-664-11	ELECT 47µF 20%	16V
C38	1-163-031-11	CERAMIC CHIP 0.01µF	50V
C39	1-104-664-11	ELECT 47µF 20%	16V
C40	1-163-031-11	CERAMIC CHIP 0.01µF	50V
C41	1-126-963-11	ELECT 4.7µF 20%	50V
C42	1-163-031-11	CERAMIC CHIP 0.01µF	50V
C43	1-126-964-11	ELECT 10µF 20%	50V
C44	1-163-031-11	CERAMIC CHIP 0.01µF	50V
C45	1-136-161-00	FILM 0.047µF 5%	50V
C46	1-126-964-11	ELECT 10µF 20%	50V
C47	1-126-959-11	ELECT 0.47µF 20%	50V
C48	1-126-960-11	ELECT 1µF 20%	50V
C49	1-163-031-11	CERAMIC CHIP 0.01µF	50V
C50	1-126-964-11	ELECT 10µF 20%	50V
C51	1-163-031-11	CERAMIC CHIP 0.01µF	50V
C52	1-136-155-00	FILM 0.015µF 5%	50V
C53	1-136-159-00	FILM 0.033µF 5%	50V
C54	1-136-165-00	FILM 0.1µF 5%	50V
C100	1-163-031-11	CERAMIC CHIP 0.01µF	50V
C101	1-163-031-11	CERAMIC CHIP 0.01µF	50V
C102	1-163-031-11	CERAMIC CHIP 0.01µF	50V
C103	1-163-031-11	CERAMIC CHIP 0.01µF	50V
C104	1-163-031-11	CERAMIC CHIP 0.01µF	50V
C105	1-163-031-11	CERAMIC CHIP 0.01µF	50V
C106	1-163-031-11	CERAMIC CHIP 0.01µF	50V
C109	1-163-031-11	CERAMIC CHIP 0.01µF	50V
C110	1-163-031-11	CERAMIC CHIP 0.01µF	50V
C111	1-163-031-11	CERAMIC CHIP 0.01µF	50V
C112	1-163-031-11	CERAMIC CHIP 0.01µF	50V
C113	1-163-031-11	CERAMIC CHIP 0.01µF	50V
C114	1-163-031-11	CERAMIC CHIP 0.01µF	50V
C117	1-163-031-11	CERAMIC CHIP 0.01µF	50V
C118	1-163-031-11	CERAMIC CHIP 0.01µF	50V
C119	1-163-031-11	CERAMIC CHIP 0.01µF	50V
C120	1-163-031-11	CERAMIC CHIP 0.01µF	50V
C121	1-163-031-11	CERAMIC CHIP 0.01µF	50V
C122	1-163-031-11	CERAMIC CHIP 0.01µF	50V
C126	1-163-031-11	CERAMIC CHIP 0.01µF	50V
C127	1-163-031-11	CERAMIC CHIP 0.01µF	50V
C128	1-163-031-11	CERAMIC CHIP 0.01µF	50V
C129	1-163-031-11	CERAMIC CHIP 0.01µF	50V
C130	1-163-031-11	CERAMIC CHIP 0.01µF	50V
C131	1-163-031-11	CERAMIC CHIP 0.01µF	50V
C133	1-163-031-11	CERAMIC CHIP 0.01µF	50V
C134	1-163-031-11	CERAMIC CHIP 0.01µF	50V
C135	1-163-031-11	CERAMIC CHIP 0.01µF	50V
C136	1-163-031-11	CERAMIC CHIP 0.01µF	50V
C137	1-163-031-11	CERAMIC CHIP 0.01µF	50V
C138	1-163-031-11	CERAMIC CHIP 0.01µF	50V
C141	1-163-031-11	CERAMIC CHIP 0.01µF	50V
C142	1-163-031-11	CERAMIC CHIP 0.01µF	50V
C143	1-163-031-11	CERAMIC CHIP 0.01µF	50V
C144	1-163-031-11	CERAMIC CHIP 0.01µF	50V
C145	1-163-031-11	CERAMIC CHIP 0.01µF	50V
C146	1-163-031-11	CERAMIC CHIP 0.01µF	50V
C500	1-102-973-00	CERAMIC 100PF 5%	50V
		<CONNECTOR>	
CN220	* 1-778-891-11	CONNECTOR, BOARD TO BOARD	
		<DIODE>	
D1	8-719-900-95	DIODE V09G	
D2	8-719-900-95	DIODE V09G	
D3	8-719-801-78	DIODE 1SS184	
D4	8-719-801-78	DIODE 1SS184	
D5	8-719-900-95	DIODE V09G	
D6	8-719-900-95	DIODE V09G	
D7	8-719-801-78	DIODE 1SS184	
D8	8-719-801-78	DIODE 1SS184	
D9	8-719-801-78	DIODE 1SS184	
		<IC>	
IC1	8-759-460-74	IC BA05FP-E2	
IC2	8-759-539-89	IC LM2990SX-5.0	
IC4	8-752-068-37	IC CXA1726AM	
IC5	8-759-549-40	IC AD826AR-REEL	
IC6	8-759-234-20	IC TC7S08F	
IC7	8-759-908-15	IC TL431CLP	
IC8	8-759-549-40	IC AD826AR-REEL	
IC9	8-759-460-81	IC BA12FP-E2	
IC10	8-759-700-69	IC NJM79L12A	
IC11	8-759-443-72	IC RH5VL43AA-T1	
IC12	8-759-300-78	IC HD14538BFP	
IC13	8-759-100-96	IC UPC4558G2	
IC15	8-759-549-40	IC AD826AR-REEL	
IC17	8-752-068-37	IC CXA1726AM	
IC19	8-752-065-69	IC CXA1470AS	
IC100	8-759-326-65	IC MP7670AS-TE2	
IC101	8-759-326-65	IC MP7670AS-TE2	
IC102	8-759-326-65	IC MP7670AS-TE2	

DE

Ref.No.	Part No.	Description	Remark
IC104	8-759-237-59	IC TC74HC541AF(EL)	
IC105	8-759-392-64	IC AD828AR	
IC106	8-759-326-65	IC MP7670AS-TE2	
IC107	8-759-326-65	IC MP7670AS-TE2	
IC108	8-759-326-65	IC MP7670AS-TE2	
IC110	8-759-392-64	IC AD828AR	
IC111	8-759-326-65	IC MP7670AS-TE2	
IC112	8-759-326-65	IC MP7670AS-TE2	
IC113	8-759-326-65	IC MP7670AS-TE2	
IC115	8-759-392-64	IC AD828AR	
IC116	8-759-392-64	IC AD828AR	
IC117	8-759-326-65	IC MP7670AS-TE2	
IC118	8-759-326-65	IC MP7670AS-TE2	
IC119	8-759-326-65	IC MP7670AS-TE2	
IC121	8-759-392-64	IC AD828AR	
IC122	8-759-392-64	IC AD828AR	
IC123	8-759-326-65	IC MP7670AS-TE2	
IC124	8-759-326-65	IC MP7670AS-TE2	
IC125	8-759-326-65	IC MP7670AS-TE2	
IC127	8-759-392-64	IC AD828AR	
IC128	8-759-392-64	IC AD828AR	
IC129	8-759-326-65	IC MP7670AS-TE2	
IC130	8-759-326-65	IC MP7670AS-TE2	
IC131	8-759-326-65	IC MP7670AS-TE2	
IC133	8-759-392-64	IC AD828AR	
	<COIL>		
L1	1-412-533-21	INDUCTOR 47μH	
L2	1-412-533-21	INDUCTOR 47μH	
	<TRANSISTOR>		
Q1	8-729-900-53	TRANSISTOR DTC114EK	
Q2	8-729-900-53	TRANSISTOR DTC114EK	
Q3	8-729-900-53	TRANSISTOR DTC114EK	
Q4	8-729-904-04	TRANSISTOR FMS2	
Q7	8-729-230-49	TRANSISTOR 2SC2712-YG	
Q10	8-729-216-22	TRANSISTOR 2SA1162-G	
Q11	8-729-230-49	TRANSISTOR 2SC2712-YG	
Q12	8-729-230-49	TRANSISTOR 2SC2712-YG	
Q13	8-729-230-49	TRANSISTOR 2SC2712-YG	
Q134	8-729-230-49	TRANSISTOR 2SC2712-YG	
	<RESISTOR>		
R1	1-216-673-11	METAL CHIP 8.2K 0.50% 1/10W	
R2	1-216-675-11	METAL CHIP 10K 0.50% 1/10W	
R3	1-216-675-11	METAL CHIP 10K 0.50% 1/10W	
R4	1-216-659-11	METAL CHIP 2.2K 0.50% 1/10W	
R5	1-216-659-11	METAL CHIP 2.2K 0.50% 1/10W	
R6	1-216-675-11	METAL CHIP 10K 0.50% 1/10W	
R7	1-216-673-11	METAL CHIP 8.2K 0.50% 1/10W	
R8	1-216-627-11	METAL CHIP 100 0.50% 1/10W	
R9	1-216-659-11	METAL CHIP 2.2K 0.50% 1/10W	
R10	1-216-659-11	METAL CHIP 2.2K 0.50% 1/10W	
R11	1-216-627-11	METAL CHIP 100 0.50% 1/10W	
R12	1-216-627-11	METAL CHIP 100 0.50% 1/10W	
R13	1-216-627-11	METAL CHIP 100 0.50% 1/10W	
R14	1-216-627-11	METAL CHIP 100 0.50% 1/10W	
R15	1-216-627-11	METAL CHIP 100 0.50% 1/10W	
R16	1-216-627-11	METAL CHIP 100 0.50% 1/10W	
R17	1-216-627-11	METAL CHIP 100 0.50% 1/10W	
R18	1-216-033-00	RES,CHIP 220 5% 1/10W	
R19	1-216-627-11	METAL CHIP 100 0.50% 1/10W	
R20	1-216-627-11	METAL CHIP 100 0.50% 1/10W	
R21	1-216-627-11	METAL CHIP 100 0.50% 1/10W	
R22	1-216-627-11	METAL CHIP 100 0.50% 1/10W	
R23	1-216-627-11	METAL CHIP 100 0.50% 1/10W	
R24	1-216-627-11	METAL CHIP 100 0.50% 1/10W	
R25	1-216-627-11	METAL CHIP 100 0.50% 1/10W	
R26	1-216-699-11	METAL CHIP 100K 0.50% 1/10W	
R27	1-216-667-11	METAL CHIP 4.7K 0.50% 1/10W	
R28	1-216-651-11	METAL CHIP 1K 0.50% 1/10W	
R29	1-216-651-11	METAL CHIP 1K 0.50% 1/10W	
R30	1-216-699-11	METAL CHIP 100K 0.50% 1/10W	
R34	1-216-627-11	METAL CHIP 100 0.50% 1/10W	
R35	1-216-679-11	METAL CHIP 15K 0.50% 1/10W	
R36	1-216-675-11	METAL CHIP 10K 0.50% 1/10W	
R37	1-216-675-11	METAL CHIP 10K 0.50% 1/10W	
R40	1-216-073-00	RES,CHIP 10K 5% 1/10W	
R41	1-216-687-11	METAL CHIP 33K 0.50% 1/10W	
R42	1-216-049-91	RES,CHIP 1K 5% 1/10W	
R45	1-216-667-11	METAL CHIP 4.7K 0.50% 1/10W	
R50	1-216-667-11	METAL CHIP 4.7K 0.50% 1/10W	
R51	1-216-671-11	METAL CHIP 6.8K 0.50% 1/10W	
R52	1-216-675-11	METAL CHIP 10K 0.50% 1/10W	
R53	1-216-651-11	METAL CHIP 1K 0.50% 1/10W	
R54	1-216-627-11	METAL CHIP 100 0.50% 1/10W	
R55	1-216-659-11	METAL CHIP 2.2K 0.50% 1/10W	
R56	1-216-679-11	METAL CHIP 15K 0.50% 1/10W	
R57	1-216-675-11	METAL CHIP 10K 0.50% 1/10W	
R58	1-216-661-11	METAL CHIP 2.7K 0.50% 1/10W	
R59	1-216-675-11	METAL CHIP 10K 0.50% 1/10W	
R60	1-216-659-11	METAL CHIP 2.2K 0.50% 1/10W	
R61	1-216-659-11	METAL CHIP 2.2K 0.50% 1/10W	
R66	1-216-627-11	METAL CHIP 100 0.50% 1/10W	
R67	1-216-661-11	METAL CHIP 2.7K 0.50% 1/10W	
R68	1-216-657-11	METAL CHIP 1.8K 0.50% 1/10W	
R69	1-216-699-11	METAL CHIP 100K 0.50% 1/10W	
R70	1-216-679-11	METAL CHIP 15K 0.50% 1/10W	
R71	1-216-685-11	METAL CHIP 27K 0.50% 1/10W	
R72	1-216-677-11	METAL CHIP 12K 0.50% 1/10W	
R73	1-216-679-11	METAL CHIP 15K 0.50% 1/10W	
R75	1-216-627-11	METAL CHIP 100 0.50% 1/10W	
R76	1-216-627-11	METAL CHIP 100 0.50% 1/10W	
R80	1-216-663-11	METAL CHIP 3.3K 0.50% 1/10W	
R81	1-216-667-11	METAL CHIP 4.7K 0.50% 1/10W	
R82	1-216-692-11	METAL CHIP 51K 0.50% 1/10W	
R84	1-216-651-11	METAL CHIP 1K 0.50% 1/10W	
R85	1-216-627-11	METAL CHIP 100 0.50% 1/10W	
R86	1-216-073-00	RES,CHIP 10K 5% 1/10W	
R87	1-216-651-11	METAL CHIP 1K 0.50% 1/10W	
R88	1-216-649-11	METAL CHIP 820 0.50% 1/10W	
R89	1-216-627-11	METAL CHIP 100 0.50% 1/10W	
R90	1-216-663-11	METAL CHIP 3.3K 0.50% 1/10W	
R91	1-216-651-11	METAL CHIP 1K 0.50% 1/10W	

Ref.No.	Part No.	Description			Remark
R92	1-216-651-11	METAL CHIP	1K	0.50%	1/10W
R93	1-216-675-11	METAL CHIP	10K	0.50%	1/10W
R94	1-216-627-11	METAL CHIP	100	0.50%	1/10W
R95	1-216-647-11	METAL CHIP	680	0.50%	1/10W
R96	1-216-627-11	METAL CHIP	100	0.50%	1/10W
R99	1-247-807-31	CARBON	100	5%	1/4W
R100	1-216-661-11	METAL CHIP	2.7K	0.50%	1/10W
R101	1-216-627-11	METAL CHIP	100	0.50%	1/10W
R102	1-216-675-11	METAL CHIP	10K	0.50%	1/10W
R103	1-216-661-11	METAL CHIP	2.7K	0.50%	1/10W
R104	1-216-675-11	METAL CHIP	10K	0.50%	1/10W
R105	1-216-661-11	METAL CHIP	2.7K	0.50%	1/10W
R106	1-216-627-11	METAL CHIP	100	0.50%	1/10W
R107	1-216-649-11	METAL CHIP	820	0.50%	1/10W
R108	1-216-661-11	METAL CHIP	2.7K	0.50%	1/10W
R109	1-216-675-11	METAL CHIP	10K	0.50%	1/10W
R110	1-216-675-11	METAL CHIP	10K	0.50%	1/10W
R111	1-216-651-11	METAL CHIP	1K	0.50%	1/10W
R112	1-216-679-11	METAL CHIP	15K	0.50%	1/10W
R113	1-216-675-11	METAL CHIP	10K	0.50%	1/10W
R114	1-216-675-11	METAL CHIP	10K	0.50%	1/10W
R115	1-216-627-11	METAL CHIP	100	0.50%	1/10W
R116	1-216-627-11	METAL CHIP	100	0.50%	1/10W
R117	1-216-627-11	METAL CHIP	100	0.50%	1/10W
R118	1-216-627-11	METAL CHIP	100	0.50%	1/10W
R119	1-216-651-11	METAL CHIP	1K	0.50%	1/10W
R120	1-216-659-11	METAL CHIP	2.2K	0.50%	1/10W
R121	1-216-025-91	RES,CHIP	100	5%	1/10W
R122	1-216-025-91	RES,CHIP	100	5%	1/10W
R123	1-216-025-91	RES,CHIP	100	5%	1/10W
R124	1-216-025-91	RES,CHIP	100	5%	1/10W
R125	1-216-025-91	RES,CHIP	100	5%	1/10W
R126	1-216-025-91	RES,CHIP	100	5%	1/10W
R127	1-216-627-11	METAL CHIP	100	0.50%	1/10W
R128	1-216-627-11	METAL CHIP	100	0.50%	1/10W
R129	1-216-627-11	METAL CHIP	100	0.50%	1/10W
R130	1-216-627-11	METAL CHIP	100	0.50%	1/10W
R131	1-216-627-11	METAL CHIP	100	0.50%	1/10W
R132	1-216-627-11	METAL CHIP	100	0.50%	1/10W
R133	1-216-661-11	METAL CHIP	2.7K	0.50%	1/10W
R134	1-216-661-11	METAL CHIP	2.7K	0.50%	1/10W
R136	1-216-669-11	METAL CHIP	5.6K	0.50%	1/10W
R137	1-216-661-11	METAL CHIP	2.7K	0.50%	1/10W
R138	1-216-661-11	METAL CHIP	2.7K	0.50%	1/10W
R140	1-216-669-11	METAL CHIP	5.6K	0.50%	1/10W
R141	1-216-669-11	METAL CHIP	5.6K	0.50%	1/10W
R142	1-216-661-11	METAL CHIP	2.7K	0.50%	1/10W
R143	1-216-661-11	METAL CHIP	2.7K	0.50%	1/10W
R144	1-216-661-11	METAL CHIP	2.7K	0.50%	1/10W
R145	1-216-661-11	METAL CHIP	2.7K	0.50%	1/10W
R148	1-216-671-11	METAL CHIP	6.8K	0.50%	1/10W
R149	1-247-807-31	CARBON	100	5%	1/4W
R150	1-216-671-11	METAL CHIP	6.8K	0.50%	1/10W
R152	1-216-661-11	METAL CHIP	2.7K	0.50%	1/10W
R153	1-216-661-11	METAL CHIP	2.7K	0.50%	1/10W
R154	1-216-661-11	METAL CHIP	2.7K	0.50%	1/10W
R155	1-216-661-11	METAL CHIP	2.7K	0.50%	1/10W
R158	1-216-651-11	METAL CHIP	1K	0.50%	1/10W
R159	1-216-671-11	METAL CHIP	6.8K	0.50%	1/10W
R160	1-216-661-11	METAL CHIP	2.7K	0.50%	1/10W
R161	1-216-661-11	METAL CHIP	2.7K	0.50%	1/10W
R163	1-216-671-11	METAL CHIP	6.8K	0.50%	1/10W
R164	1-216-661-11	METAL CHIP	2.7K	0.50%	1/10W
R165	1-216-661-11	METAL CHIP	2.7K	0.50%	1/10W
R167	1-216-671-11	METAL CHIP	6.8K	0.50%	1/10W
R168	1-216-627-11	METAL CHIP	100	0.50%	1/10W
R169	1-216-627-11	METAL CHIP	100	0.50%	1/10W
R170	1-216-627-11	METAL CHIP	100	0.50%	1/10W
R172	1-247-807-31	CARBON	100	5%	1/4W
R173	1-216-651-11	METAL CHIP	1K	0.50%	1/10W
R174	1-216-671-11	METAL CHIP	6.8K	0.50%	1/10W
R176	1-216-627-11	METAL CHIP	100	0.50%	1/10W
R177	1-216-627-11	METAL CHIP	100	0.50%	1/10W
R179	1-216-627-11	METAL CHIP	100	0.50%	1/10W
R181	1-247-807-31	CARBON	100	5%	1/4W
R182	1-216-651-11	METAL CHIP	1K	0.50%	1/10W
R183	1-216-671-11	METAL CHIP	6.8K	0.50%	1/10W
R184	1-216-661-11	METAL CHIP	2.7K	0.50%	1/10W
R185	1-216-661-11	METAL CHIP	2.7K	0.50%	1/10W
R187	1-216-671-11	METAL CHIP	6.8K	0.50%	1/10W
R188	1-216-661-11	METAL CHIP	2.7K	0.50%	1/10W
R189	1-216-661-11	METAL CHIP	2.7K	0.50%	1/10W
R191	1-216-671-11	METAL CHIP	6.8K	0.50%	1/10W
R194	1-216-661-11	METAL CHIP	2.7K	0.50%	1/10W
R196	1-216-661-11	METAL CHIP	2.7K	0.50%	1/10W
R200	1-247-807-31	CARBON	100	5%	1/4W
R201	1-216-651-11	METAL CHIP	1K	0.50%	1/10W
R202	1-216-671-11	METAL CHIP	6.8K	0.50%	1/10W
R203	1-216-671-11	METAL CHIP	6.8K	0.50%	1/10W
R204	1-216-655-11	METAL CHIP	1.5K	0.50%	1/10W
R205	1-216-675-11	METAL CHIP	10K	0.50%	1/10W
R206	1-216-661-11	METAL CHIP	2.7K	0.50%	1/10W
R207	1-216-675-11	METAL CHIP	10K	0.50%	1/10W
R208	1-216-661-11	METAL CHIP	2.7K	0.50%	1/10W
R211	1-216-671-11	METAL CHIP	6.8K	0.50%	1/10W
R212	1-216-675-11	METAL CHIP	10K	0.50%	1/10W
R213	1-216-675-11	METAL CHIP	10K	0.50%	1/10W
R215	1-247-807-31	CARBON	100	5%	1/4W
R216	1-216-651-11	METAL CHIP	1K	0.50%	1/10W
R217	1-216-671-11	METAL CHIP	6.8K	0.50%	1/10W
R218	1-216-675-11	METAL CHIP	10K	0.50%	1/10W
R219	1-216-675-11	METAL CHIP	10K	0.50%	1/10W
R221	1-216-627-11	METAL CHIP	100	0.50%	1/10W
R222	1-216-627-11	METAL CHIP	100	0.50%	1/10W
R223	1-216-627-11	METAL CHIP	100	0.50%	1/10W
R225	1-216-671-11	METAL CHIP	6.8K	0.50%	1/10W
R226	1-247-807-31	CARBON	100	5%	1/4W
R227	1-216-651-11	METAL CHIP	1K	0.50%	1/10W
R229	1-216-671-11	METAL CHIP	6.8K	0.50%	1/10W
R230	1-216-627-11	METAL CHIP	100	0.50%	1/10W
R231	1-216-627-11	METAL CHIP	100	0.50%	1/10W
R232	1-216-627-11	METAL CHIP	100	0.50%	1/10W
R234	1-216-655-11	METAL CHIP	1.5K	0.50%	1/10W
R235	1-216-661-11	METAL CHIP	2.7K	0.50%	1/10W
R236	1-216-661-11	METAL CHIP	2.7K	0.50%	1/10W
R238	1-247-807-31	CARBON	100	5%	1/4W
R239	1-216-655-11	METAL CHIP	1.5K	0.50%	1/10W
R240	1-216-661-11	METAL CHIP	2.7K	0.50%	1/10W

DE

Ref.No.	Part No.	Description		Remark
R241	1-216-661-11	METAL CHIP	2.7K	0.50% 1/10W
R243	1-216-651-11	METAL CHIP	1K	0.50% 1/10W
R244	1-216-655-11	METAL CHIP	1.5K	0.50% 1/10W
R245	1-216-655-11	METAL CHIP	1.5K	0.50% 1/10W
R246	1-216-661-11	METAL CHIP	2.7K	0.50% 1/10W
R247	1-216-661-11	METAL CHIP	2.7K	0.50% 1/10W
R248	1-216-661-11	METAL CHIP	2.7K	0.50% 1/10W
R249	1-216-661-11	METAL CHIP	2.7K	0.50% 1/10W
R252	1-216-671-11	METAL CHIP	6.8K	0.50% 1/10W
R253	1-247-807-31	CARBON	100	5% 1/4W
R254	1-216-651-11	METAL CHIP	1K	0.50% 1/10W
R255	1-216-655-11	METAL CHIP	1.5K	0.50% 1/10W
R256	1-216-655-11	METAL CHIP	1.5K	0.50% 1/10W
R257	1-216-661-11	METAL CHIP	2.7K	0.50% 1/10W
R258	1-216-661-11	METAL CHIP	2.7K	0.50% 1/10W
R259	1-216-661-11	METAL CHIP	2.7K	0.50% 1/10W
R260	1-216-661-11	METAL CHIP	2.7K	0.50% 1/10W
R263	1-216-671-11	METAL CHIP	6.8K	0.50% 1/10W
R264	1-216-655-11	METAL CHIP	1.5K	0.50% 1/10W
R265	1-216-661-11	METAL CHIP	2.7K	0.50% 1/10W
R266	1-216-661-11	METAL CHIP	2.7K	0.50% 1/10W
R268	1-216-655-11	METAL CHIP	1.5K	0.50% 1/10W
R269	1-216-661-11	METAL CHIP	2.7K	0.50% 1/10W
R270	1-216-661-11	METAL CHIP	2.7K	0.50% 1/10W
R272	1-247-807-31	CARBON	100	5% 1/4W
R273	1-216-651-11	METAL CHIP	1K	0.50% 1/10W
R274	1-216-627-11	METAL CHIP	100	0.50% 1/10W
R275	1-216-627-11	METAL CHIP	100	0.50% 1/10W
R276	1-216-627-11	METAL CHIP	100	0.50% 1/10W
R278	1-216-665-11	METAL CHIP	3.9K	0.50% 1/10W
R279	1-247-807-31	CARBON	100	5% 1/4W
R280	1-216-651-11	METAL CHIP	1K	0.50% 1/10W
R283	1-216-627-11	METAL CHIP	100	0.50% 1/10W
R284	1-216-627-11	METAL CHIP	100	0.50% 1/10W
R285	1-216-627-11	METAL CHIP	100	0.50% 1/10W
R287	1-216-671-11	METAL CHIP	6.8K	0.50% 1/10W
R288	1-216-655-11	METAL CHIP	1.5K	0.50% 1/10W
R289	1-216-661-11	METAL CHIP	2.7K	0.50% 1/10W
R290	1-216-661-11	METAL CHIP	2.7K	0.50% 1/10W
R292	1-216-655-11	METAL CHIP	1.5K	0.50% 1/10W
R293	1-216-661-11	METAL CHIP	2.7K	0.50% 1/10W
R294	1-216-661-11	METAL CHIP	2.7K	0.50% 1/10W
R296	1-247-807-31	CARBON	100	5% 1/4W
R297	1-216-655-11	METAL CHIP	1.5K	0.50% 1/10W
R299	1-216-661-11	METAL CHIP	2.7K	0.50% 1/10W
R301	1-216-661-11	METAL CHIP	2.7K	0.50% 1/10W
R305	1-216-651-11	METAL CHIP	1K	0.50% 1/10W
R307	1-216-671-11	METAL CHIP	6.8K	0.50% 1/10W
R308	1-247-807-31	CARBON	100	5% 1/4W
R309	1-216-651-11	METAL CHIP	1K	0.50% 1/10W
R310	1-216-671-11	METAL CHIP	6.8K	0.50% 1/10W
R311	1-216-655-11	METAL CHIP	1.5K	0.50% 1/10W
R312	1-216-675-11	METAL CHIP	10K	0.50% 1/10W
R313	1-216-661-11	METAL CHIP	2.7K	0.50% 1/10W
R314	1-216-675-11	METAL CHIP	10K	0.50% 1/10W
R315	1-216-661-11	METAL CHIP	2.7K	0.50% 1/10W
R318	1-216-671-11	METAL CHIP	6.8K	0.50% 1/10W
R319	1-216-675-11	METAL CHIP	10K	0.50% 1/10W
R320	1-216-675-11	METAL CHIP	10K	0.50% 1/10W
R322	1-216-671-11	METAL CHIP	6.8K	0.50% 1/10W
R323	1-216-671-11	METAL CHIP	6.8K	0.50% 1/10W
R324	1-216-675-11	METAL CHIP	10K	0.50% 1/10W
R325	1-216-675-11	METAL CHIP	10K	0.50% 1/10W
R327	1-216-627-11	METAL CHIP	100	0.50% 1/10W
R328	1-216-627-11	METAL CHIP	100	0.50% 1/10W
R329	1-216-627-11	METAL CHIP	100	0.50% 1/10W
R331	1-247-807-31	CARBON	100	5% 1/4W
R332	1-216-651-11	METAL CHIP	1K	0.50% 1/10W
R333	1-216-665-11	METAL CHIP	3.9K	0.50% 1/10W
R335	1-247-807-31	CARBON	100	5% 1/4W
R336	1-216-627-11	METAL CHIP	100	0.50% 1/10W
R337	1-216-627-11	METAL CHIP	100	0.50% 1/10W
R338	1-216-627-11	METAL CHIP	100	0.50% 1/10W
R340	1-216-651-11	METAL CHIP	1K	0.50% 1/10W
R341	1-216-655-11	METAL CHIP	1.5K	0.50% 1/10W
R342	1-216-661-11	METAL CHIP	2.7K	0.50% 1/10W
R343	1-216-661-11	METAL CHIP	2.7K	0.50% 1/10W
R345	1-216-655-11	METAL CHIP	1.5K	0.50% 1/10W
R346	1-216-661-11	METAL CHIP	2.7K	0.50% 1/10W
R347	1-216-661-11	METAL CHIP	2.7K	0.50% 1/10W
R349	1-216-671-11	METAL CHIP	6.8K	0.50% 1/10W
R350	1-216-655-11	METAL CHIP	1.5K	0.50% 1/10W
R351	1-216-655-11	METAL CHIP	1.5K	0.50% 1/10W
R352	1-216-661-11	METAL CHIP	2.7K	0.50% 1/10W
R353	1-216-661-11	METAL CHIP	2.7K	0.50% 1/10W
R354	1-216-661-11	METAL CHIP	2.7K	0.50% 1/10W
R355	1-216-661-11	METAL CHIP	2.7K	0.50% 1/10W
R358	1-247-807-31	CARBON	100	5% 1/4W
R359	1-216-651-11	METAL CHIP	1K	0.50% 1/10W
R360	1-216-671-11	METAL CHIP	6.8K	0.50% 1/10W
R361	1-216-655-11	METAL CHIP	1.5K	0.50% 1/10W
R362	1-216-655-11	METAL CHIP	1.5K	0.50% 1/10W
R363	1-216-661-11	METAL CHIP	2.7K	0.50% 1/10W
R364	1-216-661-11	METAL CHIP	2.7K	0.50% 1/10W
R365	1-216-661-11	METAL CHIP	2.7K	0.50% 1/10W
R366	1-216-661-11	METAL CHIP	2.7K	0.50% 1/10W
R367	1-216-655-11	METAL CHIP	1.5K	0.50% 1/10W
R368	1-216-661-11	METAL CHIP	2.7K	0.50% 1/10W
R369	1-216-661-11	METAL CHIP	2.7K	0.50% 1/10W
R370	1-216-627-11	METAL CHIP	100	0.50% 1/10W
R371	1-247-807-31	CARBON	100	5% 1/4W
R372	1-216-651-11	METAL CHIP	1K	0.50% 1/10W
R373	1-216-655-11	METAL CHIP	1.5K	0.50% 1/10W
R374	1-216-661-11	METAL CHIP	2.7K	0.50% 1/10W
R375	1-216-661-11	METAL CHIP	2.7K	0.50% 1/10W
R376	1-216-673-11	METAL CHIP	8.2K	0.50% 1/10W
R377	1-216-627-11	METAL CHIP	100	0.50% 1/10W
R378	1-216-627-11	METAL CHIP	100	0.50% 1/10W
R379	1-216-627-11	METAL CHIP	100	0.50% 1/10W
R380	1-216-673-11	METAL CHIP	8.2K	0.50% 1/10W
R381	1-216-671-11	METAL CHIP	6.8K	0.50% 1/10W
R382	1-216-673-11	METAL CHIP	8.2K	0.50% 1/10W
R383	1-247-807-31	CARBON	100	5% 1/4W
R384	1-216-651-11	METAL CHIP	1K	0.50% 1/10W
R386	1-216-671-11	METAL CHIP	6.8K	0.50% 1/10W
R387	1-216-627-11	METAL CHIP	100	0.50% 1/10W

Ref.No.	Part No.	Description			Remark
R388	1-216-627-11	METAL CHIP	100	0.50%	1/10W
R389	1-216-627-11	METAL CHIP	100	0.50%	1/10W
R391	1-216-665-11	METAL CHIP	3.9K	0.50%	1/10W
R392	1-216-655-11	METAL CHIP	1.5K	0.50%	1/10W
R393	1-216-661-11	METAL CHIP	2.7K	0.50%	1/10W
R394	1-216-661-11	METAL CHIP	2.7K	0.50%	1/10W
R395	1-216-681-11	METAL CHIP	18K	0.50%	1/10W
R397	1-247-807-31	CARBON	100	5%	1/4W
R398	1-216-655-11	METAL CHIP	1.5K	0.50%	1/10W
R399	1-216-661-11	METAL CHIP	2.7K	0.50%	1/10W
R400	1-216-661-11	METAL CHIP	2.7K	0.50%	1/10W
R401	1-216-681-11	METAL CHIP	18K	0.50%	1/10W
R402	1-216-651-11	METAL CHIP	1K	0.50%	1/10W
R403	1-216-655-11	METAL CHIP	1.5K	0.50%	1/10W
R405	1-216-661-11	METAL CHIP	2.7K	0.50%	1/10W
R407	1-216-661-11	METAL CHIP	2.7K	0.50%	1/10W
R409	1-216-681-11	METAL CHIP	18K	0.50%	1/10W
R410	1-216-059-00	RES,CHIP	2.7K	5%	1/10W
R411	1-216-065-91	RES,CHIP	4.7K	5%	1/10W
R412	1-216-065-91	RES,CHIP	4.7K	5%	1/10W
R413	1-216-049-91	RES,CHIP	1K	5%	1/10W
	<TEST PIN>				
TP1	* 1-537-864-11	PIN, POST			
TP2	* 1-537-864-11	PIN, POST			
TP3	* 1-537-864-11	PIN, POST			
TP4	* 1-537-864-11	PIN, POST			

****

* A-1346-777-A DF COMPLETE PC BOARD
****

	3-701-809-31	SCREW, TERMINAL (M3X8)			
	* 4-056-076-01	PIN, GUIDE			
	* 4-067-816-01	HOLDER (DF), TR			
	* 4-067-822-01	HOLDER (D), TR			
	4-067-843-01	SHEET (DF), INSULATOR			
	4-382-854-11	SCREW (M3X10), P, SW (+)			
	<CAPACITOR>				
C1	1-107-909-11	ELECT	47μF	20%	16V
C2	1-107-907-11	ELECT	22μF	20%	16V
C3	1-107-909-11	ELECT	47μF	20%	16V
C4	1-136-159-00	FILM	0.033μF	5%	50V
C5	1-107-909-11	ELECT	47μF	20%	16V
C6	1-107-902-11	ELECT	1μF	20%	50V
C7	1-107-909-11	ELECT	47μF	20%	16V
C8	1-136-159-00	FILM	0.033μF	5%	50V
C9	1-136-155-00	FILM	0.015μF	5%	50V
C10	1-136-165-00	FILM	0.1μF	5%	50V
C11	1-107-907-11	ELECT	22μF	20%	16V
C12	1-163-251-11	CERAMIC CHIP	100PF	5%	50V
C14	1-128-526-11	ELECT	100μF	20%	16V
C15	1-164-004-11	CERAMIC CHIP	0.1μF	10%	25V
C16	1-107-909-11	ELECT	47μF	20%	16V
C18	1-107-909-11	ELECT	47μF	20%	16V
C19	1-164-004-11	CERAMIC CHIP	0.1μF	10%	25V
C20	1-128-526-11	ELECT	100μF	20%	16V
C22	1-137-366-11	FILM	0.0022μF	5%	50V
C26	1-163-031-11	CERAMIC CHIP	0.01μF		50V
C27	1-163-031-11	CERAMIC CHIP	0.01μF		50V
C28	1-163-031-11	CERAMIC CHIP	0.01μF		50V
C29	1-163-031-11	CERAMIC CHIP	0.01μF		50V
C30	1-163-031-11	CERAMIC CHIP	0.01μF		50V
C31	1-163-031-11	CERAMIC CHIP	0.01μF		50V
C32	1-163-031-11	CERAMIC CHIP	0.01μF		50V
C33	1-163-031-11	CERAMIC CHIP	0.01μF		50V
C34	1-163-031-11	CERAMIC CHIP	0.01μF		50V
C35	1-163-031-11	CERAMIC CHIP	0.01μF		50V
C36	1-163-031-11	CERAMIC CHIP	0.01μF		50V
C37	1-163-031-11	CERAMIC CHIP	0.01μF		50V
C38	1-107-902-11	ELECT	1μF	20%	50V
C39	1-107-902-11	ELECT	1μF	20%	50V
C40	1-107-713-11	ELECT	4.7μF	20%	35V
C41	1-128-526-11	ELECT	100μF	20%	16V
C100	1-107-905-11	ELECT	4.7μF	20%	50V
C101	1-102-514-11	CERAMIC	22PF	5%	50V
C102	1-104-653-11	ELECT	220μF	20%	16V
C103	1-128-526-11	ELECT	100μF	20%	25V
C104	1-164-004-11	CERAMIC CHIP	0.1μF	10%	25V
C105	1-107-933-11	ELECT	100μF	20%	100V
C106	1-107-933-11	ELECT	100μF	20%	100V
C107	1-164-004-11	CERAMIC CHIP	0.1μF	10%	25V
C108	1-163-031-11	CERAMIC CHIP	0.01μF		50V
C109	1-163-031-11	CERAMIC CHIP	0.01μF		50V
C110	1-136-728-11	FILM	0.47μF	5%	100V
C111	1-104-653-11	ELECT	220μF	20%	16V
C112	1-137-418-11	FILM	0.022μF	10%	100V
C113	1-163-031-11	CERAMIC CHIP	0.01μF		50V
C114	1-107-905-11	ELECT	4.7μF	20%	50V
C115	1-102-514-11	CERAMIC	22PF	5%	50V
C116	1-104-653-11	ELECT	220μF	20%	16V
C117	1-164-004-11	CERAMIC CHIP	0.1μF	10%	25V
C118	1-107-933-11	ELECT	100μF	20%	100V
C119	1-107-933-11	ELECT	100μF	20%	100V
C120	1-164-004-11	CERAMIC CHIP	0.1μF	10%	25V
C121	1-136-728-11	FILM	0.47μF	5%	100V
C122	1-104-653-11	ELECT	220μF	20%	16V
C123	1-137-418-11	FILM	0.022μF	10%	100V
C124	1-163-031-11	CERAMIC CHIP	0.01μF		50V
C125	1-163-031-11	CERAMIC CHIP	0.01μF		50V
C126	1-107-905-11	ELECT	4.7μF	20%	50V
C127	1-102-514-11	CERAMIC	22PF	5%	50V
C128	1-128-526-11	ELECT	100μF	20%	16V
C129	1-104-653-11	ELECT	220μF	20%	16V
C130	1-164-004-11	CERAMIC CHIP	0.1μF	10%	25V
C131	1-107-902-11	ELECT	1μF	20%	50V
C132	1-107-933-11	ELECT	100μF	20%	100V
C133	1-107-933-11	ELECT	100μF	20%	100V
C134	1-164-004-11	CERAMIC CHIP	0.1μF	10%	25V
C135	1-104-653-11	ELECT	220μF	20%	16V
C136	1-163-031-11	CERAMIC CHIP	0.01μF		50V
C137	1-136-728-11	FILM	0.47μF	5%	100V
C138	1-137-418-11	FILM	0.022μF	10%	100V

DF

Ref.No.	Part No.	Description			Remark
C139	1-163-031-11	CERAMIC CHIP 0.01μF			50V
C140	1-107-889-11	ELECT	220μF	20%	25V
C141	1-164-004-11	CERAMIC CHIP 0.1μF		10%	25V
C142	1-104-653-11	ELECT	220μF	20%	16V
C143	1-104-653-11	ELECT	220μF	20%	16V
C144	1-164-004-11	CERAMIC CHIP 0.1μF		10%	25V
C145	1-107-889-11	ELECT	220μF	20%	25V
C147	1-163-031-11	CERAMIC CHIP 0.01μF			50V
C148	1-137-462-11	FILM	0.018μF	5%	100V
C149	1-137-462-11	FILM	0.018μF	5%	100V
C150	1-137-462-11	FILM	0.018μF	5%	100V
C151	1-163-031-11	CERAMIC CHIP 0.01μF			50V
C152	1-107-907-11	ELECT	22μF	20%	16V
C153	1-137-410-11	FILM	0.001μF	10%	100V
C154	1-137-410-11	FILM	0.001μF	10%	100V
C155	1-137-410-11	FILM	0.001μF	10%	100V
C201	1-163-031-11	CERAMIC CHIP 0.01μF			50V
C202	1-136-165-00	FILM	0.1μF	5%	50V
C203	1-136-165-00	FILM	0.1μF	5%	50V
C204	1-163-031-11	CERAMIC CHIP 0.01μF			50V
C205	1-163-031-11	CERAMIC CHIP 0.01μF			50V
C206	1-136-165-00	FILM	0.1μF	5%	50V
C207	1-136-165-00	FILM	0.1μF	5%	50V
C208	1-107-909-11	ELECT	47μF	20%	16V
C209	1-136-165-00	FILM	0.1μF	5%	50V
C210	1-136-165-00	FILM	0.1μF	5%	50V
C211	1-163-031-11	CERAMIC CHIP 0.01μF			50V
C212	1-107-909-11	ELECT	47μF	20%	16V
C213	1-163-031-11	CERAMIC CHIP 0.01μF			50V
C214	1-163-031-11	CERAMIC CHIP 0.01μF			50V
C215	1-163-031-11	CERAMIC CHIP 0.01μF			50V
C216	1-136-165-00	FILM	0.1μF	5%	50V
C217	1-136-165-00	FILM	0.1μF	5%	50V
C218	1-136-165-00	FILM	0.1μF	5%	50V
C219	1-136-165-00	FILM	0.1μF	5%	50V
C220	1-136-165-00	FILM	0.1μF	5%	50V
C221	1-136-165-00	FILM	0.1μF	5%	50V
C222	1-163-031-11	CERAMIC CHIP 0.01μF			50V
C223	1-163-031-11	CERAMIC CHIP 0.01μF			50V
	<CONNECTOR>				
CN230	* 1-778-891-11	CONNECTOR, BOARD TO BOARD			
CN231	* 1-564-519-11	PLUG, CONNECTOR 4P			
CN232	* 1-564-519-11	PLUG, CONNECTOR 4P			
CN233	* 1-564-519-11	PLUG, CONNECTOR 4P			
	<DIODE>				
D1	8-719-900-95	DIODE V09G			
D2	8-719-900-95	DIODE V09G			
D100	8-719-911-19	DIODE 1SS119-25			
D101	8-719-900-95	DIODE V09G			
D102	8-719-900-95	DIODE V09G			
D104	8-719-911-19	DIODE 1SS119-25			
D105	8-719-911-19	DIODE 1SS119-25			
D106	8-719-900-95	DIODE V09G			
D107	8-719-900-95	DIODE V09G			
D108	8-719-911-19	DIODE 1SS119-25			

Ref.No.	Part No.	Description	Remark
D109	8-719-911-19	DIODE 1SS119-25	
D110	8-719-900-95	DIODE V09G	
D111	8-719-900-95	DIODE V09G	
D112	8-719-900-95	DIODE V09G	
D113	8-719-900-95	DIODE V09G	
D201	8-719-800-76	DIODE 1SS226	
D202	8-719-800-76	DIODE 1SS226	
D203	8-719-800-76	DIODE 1SS226	
D204	8-719-800-76	DIODE 1SS226	
D205	8-719-800-76	DIODE 1SS226	
D206	8-719-800-76	DIODE 1SS226	
D207	8-719-801-78	DIODE 1SS184	
D208	8-719-800-76	DIODE 1SS226	
D209	8-719-800-76	DIODE 1SS226	
D210	8-719-800-76	DIODE 1SS226	
D211	8-719-800-76	DIODE 1SS226	
D212	8-719-800-76	DIODE 1SS226	
D213	8-719-800-76	DIODE 1SS226	
	<IC>		
IC1	8-759-381-53	IC UPC814G2-E2	
IC2	8-759-100-96	IC UPC4558G2	
IC3	8-752-065-69	IC CXA1470AS	
IC4	8-759-100-96	IC UPC4558G2	
IC5	8-759-100-96	IC UPC4558G2	
IC8	8-759-144-82	IC UPC2405HF	
IC9	8-759-247-67	IC LM2990T-5.0	
IC10	8-759-300-78	IC HD14538BFP	
IC11	8-759-286-47	IC PC74HC4053D-T	
IC20	8-759-381-53	IC UPC814G2-E2	
IC100	8-759-035-93	IC SC7S32F	
IC101	8-759-497-41	IC LA7876NZA	
IC102	8-759-326-65	IC MP7670AS-TE2	
IC103	8-759-100-93	IC UPC393G2	
IC104	8-759-497-41	IC LA7876NZA	
IC105	8-759-326-65	IC MP7670AS-TE2	
IC106	8-759-497-41	IC LA7876NZA	
IC107	8-759-326-65	IC MP7670AS-TE2	
IC108	8-759-231-58	IC TA7812S	
IC109	8-759-701-88	IC NJM7912FA	
IC110	8-759-285-52	IC PC74HC02D-T	
IC201	8-759-326-65	IC MP7670AS-TE2	
IC202	8-759-237-59	IC TC74HC541AF(EL)	
IC203	8-759-100-96	IC UPC4558G2	
IC204	8-759-100-96	IC UPC4558G2	
IC205	8-759-908-15	IC TL431CLP	
IC206	8-759-100-96	IC UPC4558G2	
IC207	8-759-234-20	IC TC7S08F	
IC208	8-759-443-72	IC RH5VL43AA-T1	
IC209	8-759-326-65	IC MP7670AS-TE2	
IC210	8-759-100-96	IC UPC4558G2	
IC211	8-759-100-96	IC UPC4558G2	
IC212	8-759-326-65	IC MP7670AS-TE2	
IC213	8-759-100-96	IC UPC4558G2	
	<COIL>		
L100	1-412-533-21	INDUCTOR 47μH	

Ref.No.	Part No.	Description	Remark
L101	1-412-533-21	INDUCTOR 47µH	
L102	1-412-533-21	INDUCTOR 47µH	
	<TRANSISTOR>		
Q1	8-729-926-23	TRANSISTOR FMW5	
Q2	8-729-105-73	TRANSISTOR 2SK523-L2	
Q3	8-729-216-22	TRANSISTOR 2SA1162-G	
Q4	8-729-230-49	TRANSISTOR 2SC2712-YG	
Q5	8-729-902-96	TRANSISTOR FMS1	
Q6	1-801-806-11	TRANSISTOR DTC144EKA-T146	
Q100	8-729-230-49	TRANSISTOR 2SC2712-YG	
Q101	1-801-806-11	TRANSISTOR DTC144EKA-T146	
Q102	8-729-230-49	TRANSISTOR 2SC2712-YG	
Q103	8-729-230-49	TRANSISTOR 2SC2712-YG	
Q104	8-729-230-49	TRANSISTOR 2SC2712-YG	
Q105	8-729-230-49	TRANSISTOR 2SC2712-YG	
Q106	1-801-806-11	TRANSISTOR DTC144EKA-T146	
Q201	8-729-207-82	TRANSISTOR 2SC3421-Y	
Q202	8-729-207-82	TRANSISTOR 2SC3421-Y	
Q203	8-729-207-89	TRANSISTOR 2SA1358-Y	
Q204	8-729-207-89	TRANSISTOR 2SA1358-Y	
Q205	8-729-207-82	TRANSISTOR 2SC3421-Y	
Q206	8-729-207-82	TRANSISTOR 2SC3421-Y	
Q207	8-729-207-89	TRANSISTOR 2SA1358-Y	
Q208	8-729-207-89	TRANSISTOR 2SA1358-Y	
Q209	8-729-207-82	TRANSISTOR 2SC3421-Y	
Q210	8-729-207-82	TRANSISTOR 2SC3421-Y	
Q211	8-729-207-89	TRANSISTOR 2SA1358-Y	
Q212	8-729-207-89	TRANSISTOR 2SA1358-Y	
Q213	8-729-207-82	TRANSISTOR 2SC3421-Y	
Q214	8-729-207-82	TRANSISTOR 2SC3421-Y	
Q215	8-729-207-89	TRANSISTOR 2SA1358-Y	
Q216	8-729-207-89	TRANSISTOR 2SA1358-Y	
Q217	8-729-207-82	TRANSISTOR 2SC3421-Y	
Q218	8-729-207-82	TRANSISTOR 2SC3421-Y	
Q219	8-729-207-89	TRANSISTOR 2SA1358-Y	
Q220	8-729-207-89	TRANSISTOR 2SA1358-Y	
Q221	8-729-207-82	TRANSISTOR 2SC3421-Y	
Q222	8-729-207-82	TRANSISTOR 2SC3421-Y	
Q223	8-729-207-89	TRANSISTOR 2SA1358-Y	
Q224	8-729-207-89	TRANSISTOR 2SA1358-Y	
	<RESISTOR>		
R1	1-216-677-11	METAL CHIP 12K 0.50% 1/10W	
R2	1-216-699-11	METAL CHIP 100K 0.50% 1/10W	
R3	1-216-683-11	METAL CHIP 22K 0.50% 1/10W	
R4	1-216-663-11	METAL CHIP 3.3K 0.50% 1/10W	
R6	1-216-659-11	METAL CHIP 2.2K 0.50% 1/10W	
R7	1-216-627-11	METAL CHIP 100 0.50% 1/10W	
R8	1-216-627-11	METAL CHIP 100 0.50% 1/10W	
R9	1-216-627-11	METAL CHIP 100 0.50% 1/10W	
R10	1-216-691-11	METAL CHIP 47K 0.50% 1/10W	
R11	1-216-659-11	METAL CHIP 2.2K 0.50% 1/10W	
R12	1-216-692-11	METAL CHIP 51K 0.50% 1/10W	
R13	1-216-659-11	METAL CHIP 2.2K 0.50% 1/10W	
R14	1-216-627-11	METAL CHIP 100 0.50% 1/10W	
R15	1-216-675-11	METAL CHIP 10K 0.50% 1/10W	
R16	1-216-675-11	METAL CHIP 10K 0.50% 1/10W	
R17	1-218-756-11	METAL CHIP 150K 0.50% 1/10W	
R18	1-216-699-11	METAL CHIP 100K 0.50% 1/10W	
R19	1-216-667-11	METAL CHIP 4.7K 0.50% 1/10W	
R20	1-216-675-11	METAL CHIP 10K 0.50% 1/10W	
R21	1-216-667-11	METAL CHIP 4.7K 0.50% 1/10W	
R23	1-216-659-11	METAL CHIP 2.2K 0.50% 1/10W	
R24	1-216-667-11	METAL CHIP 4.7K 0.50% 1/10W	
R26	1-216-675-11	METAL CHIP 10K 0.50% 1/10W	
R27	1-216-627-11	METAL CHIP 100 0.50% 1/10W	
R28	1-216-667-11	METAL CHIP 4.7K 0.50% 1/10W	
R29	1-216-627-11	METAL CHIP 100 0.50% 1/10W	
R30	1-216-659-11	METAL CHIP 2.2K 0.50% 1/10W	
R31	1-216-675-11	METAL CHIP 10K 0.50% 1/10W	
R33	1-216-627-11	METAL CHIP 100 0.50% 1/10W	
R34	1-216-627-11	METAL CHIP 100 0.50% 1/10W	
R35	1-216-667-11	METAL CHIP 4.7K 0.50% 1/10W	
R36	1-216-667-11	METAL CHIP 4.7K 0.50% 1/10W	
R38	1-216-659-11	METAL CHIP 2.2K 0.50% 1/10W	
R39	1-216-651-11	METAL CHIP 1K 0.50% 1/10W	
R41	1-216-651-11	METAL CHIP 1K 0.50% 1/10W	
R42	1-216-677-11	METAL CHIP 12K 0.50% 1/10W	
R43	1-216-667-11	METAL CHIP 4.7K 0.50% 1/10W	
R44	1-216-699-11	METAL CHIP 100K 0.50% 1/10W	
R45	1-216-683-11	METAL CHIP 22K 0.50% 1/10W	
R46	1-216-659-11	METAL CHIP 2.2K 0.50% 1/10W	
R47	1-216-667-11	METAL CHIP 4.7K 0.50% 1/10W	
R48	1-216-675-11	METAL CHIP 10K 0.50% 1/10W	
R49	1-216-675-11	METAL CHIP 10K 0.50% 1/10W	
R50	1-216-659-11	METAL CHIP 2.2K 0.50% 1/10W	
R55	1-216-699-11	METAL CHIP 100K 0.50% 1/10W	
R56	1-216-671-11	METAL CHIP 6.8K 0.50% 1/10W	
R57	1-216-665-11	METAL CHIP 3.9K 0.50% 1/10W	
R58	1-216-691-11	METAL CHIP 47K 0.50% 1/10W	
R60	1-216-675-11	METAL CHIP 10K 0.50% 1/10W	
R62	1-216-627-11	METAL CHIP 100 0.50% 1/10W	
R63	1-216-675-11	METAL CHIP 10K 0.50% 1/10W	
R64	1-216-691-11	METAL CHIP 47K 0.50% 1/10W	
R65	1-216-603-11	METAL CHIP 10 0.50% 1/10W	
R66	1-216-667-11	METAL CHIP 4.7K 0.50% 1/10W	
R67	1-216-667-11	METAL CHIP 4.7K 0.50% 1/10W	
R100	1-216-685-11	METAL CHIP 27K 0.50% 1/10W	
R101	1-216-683-11	METAL CHIP 22K 0.50% 1/10W	
R102	1-216-651-11	METAL CHIP 1K 0.50% 1/10W	
R103	1-216-627-11	METAL CHIP 100 0.50% 1/10W	
R104	1-216-651-11	METAL CHIP 1K 0.50% 1/10W	
R105	1-216-668-11	METAL CHIP 5.1K 0.50% 1/10W	
R106	1-218-756-11	METAL CHIP 150K 0.50% 1/10W	
R107	1-216-369-00	METAL OXIDE 1 5% 2W F	
R108	1-218-762-11	METAL CHIP 270K 0.50% 1/10W	
R109	1-218-768-11	METAL CHIP 470K 0.50% 1/10W	
R110	1-216-627-11	METAL CHIP 100 0.50% 1/10W	
R111	1-216-699-11	METAL CHIP 100K 0.50% 1/10W	
R112	1-216-699-11	METAL CHIP 100K 0.50% 1/10W	
R113	1-216-699-11	METAL CHIP 100K 0.50% 1/10W	
R114	1-215-892-11	METAL OXIDE 1K 5% 2W F	
R115	1-216-691-11	METAL CHIP 47K 0.50% 1/10W	
R116	1-216-675-11	METAL CHIP 10K 0.50% 1/10W	

DF

Ref.No.	Part No.	Description				Remark
R117	1-216-627-11	METAL CHIP	100	0.50%	1/10W	
R118	1-249-420-11	CARBON	1.8K	5%	1/4W	
R119	1-216-675-11	METAL CHIP	10K	0.50%	1/10W	
R120	1-249-413-11	CARBON	470	5%	1/4W	
R121	1-216-667-11	METAL CHIP	4.7K	0.50%	1/10W	
R122	1-214-800-11	METAL	2.2	1%	1/2W	
R123	1-214-800-11	METAL	2.2	1%	1/2W	
R124	1-216-627-11	METAL CHIP	100	0.50%	1/10W	
R125	1-218-756-11	METAL CHIP	150K	0.50%	1/10W	
R126	1-216-627-11	METAL CHIP	100	0.50%	1/10W	
R127	1-218-773-11	METAL CHIP	750K	0.50%	1/10W	
R128	1-216-627-11	METAL CHIP	100	0.50%	1/10W	
R129	1-216-675-11	METAL CHIP	10K	0.50%	1/10W	
R130	1-216-675-11	METAL CHIP	10K	0.50%	1/10W	
R131	1-218-764-11	METAL CHIP	330K	0.50%	1/10W	
R132	1-218-764-11	METAL CHIP	330K	0.50%	1/10W	
R133	1-216-685-11	METAL CHIP	27K	0.50%	1/10W	
R134	1-218-756-11	METAL CHIP	150K	0.50%	1/10W	
R135	1-218-773-11	METAL CHIP	750K	0.50%	1/10W	
R136	1-216-627-11	METAL CHIP	100	0.50%	1/10W	
R137	1-216-683-11	METAL CHIP	22K	0.50%	1/10W	
R138	1-216-651-11	METAL CHIP	1K	0.50%	1/10W	
R139	1-216-369-00	METAL OXIDE	1	5%	2W	F
R140	1-216-627-11	METAL CHIP	100	0.50%	1/10W	
R141	1-216-627-11	METAL CHIP	100	0.50%	1/10W	
R142	1-215-892-11	METAL OXIDE	1K	5%	2W	F
R143	1-216-675-11	METAL CHIP	10K	0.50%	1/10W	
R144	1-216-668-11	METAL CHIP	5.1K	0.50%	1/10W	
R145	1-218-768-11	METAL CHIP	470K	0.50%	1/10W	
R146	1-218-770-11	METAL CHIP	560K	0.50%	1/10W	
R147	1-218-762-11	METAL CHIP	270K	0.50%	1/10W	
R148	1-216-691-11	METAL CHIP	47K	0.50%	1/10W	
R149	1-249-420-11	CARBON	1.8K	5%	1/4W	
R150	1-249-413-11	CARBON	470	5%	1/4W	
R151	1-216-627-11	METAL CHIP	100	0.50%	1/10W	
R152	1-216-667-11	METAL CHIP	4.7K	0.50%	1/10W	
R153	1-214-800-11	METAL	2.2	1%	1/2W	
R154	1-214-800-11	METAL	2.2	1%	1/2W	
R155	1-216-627-11	METAL CHIP	100	0.50%	1/10W	
R156	1-216-627-11	METAL CHIP	100	0.50%	1/10W	
R157	1-218-756-11	METAL CHIP	150K	0.50%	1/10W	
R158	1-216-627-11	METAL CHIP	100	0.50%	1/10W	
R159	1-218-773-11	METAL CHIP	750K	0.50%	1/10W	
R160	1-216-627-11	METAL CHIP	100	0.50%	1/10W	
R161	1-216-685-11	METAL CHIP	27K	0.50%	1/10W	
R162	1-218-764-11	METAL CHIP	330K	0.50%	1/10W	
R163	1-218-764-11	METAL CHIP	330K	0.50%	1/10W	
R164	1-216-683-11	METAL CHIP	22K	0.50%	1/10W	
R165	1-216-651-11	METAL CHIP	1K	0.50%	1/10W	
R166	1-218-756-11	METAL CHIP	150K	0.50%	1/10W	
R167	1-218-773-11	METAL CHIP	750K	0.50%	1/10W	
R168	1-216-668-11	METAL CHIP	5.1K	0.50%	1/10W	
R169	1-218-756-11	METAL CHIP	150K	0.50%	1/10W	
R170	1-216-369-00	METAL OXIDE	1	5%	2W	F
R171	1-216-659-11	METAL CHIP	2.2K	0.50%	1/10W	
R172	1-216-675-11	METAL CHIP	10K	0.50%	1/10W	
R173	1-215-892-11	METAL OXIDE	1K	5%	2W	F
R174	1-218-762-11	METAL CHIP	270K	0.50%	1/10W	
R175	1-218-768-11	METAL CHIP	470K	0.50%	1/10W	
R176	1-216-627-11	METAL CHIP	100	0.50%	1/10W	
R177	1-216-691-11	METAL CHIP	47K	0.50%	1/10W	
R178	1-249-420-11	CARBON	1.8K	5%	1/4W	
R179	1-216-627-11	METAL CHIP	100	0.50%	1/10W	
R180	1-249-413-11	CARBON	470	5%	1/4W	
R181	1-214-800-11	METAL	2.2	1%	1/2W	
R182	1-214-800-11	METAL	2.2	1%	1/2W	
R183	1-216-667-11	METAL CHIP	4.7K	0.50%	1/10W	
R184	1-216-627-11	METAL CHIP	100	0.50%	1/10W	
R185	1-216-627-11	METAL CHIP	100	0.50%	1/10W	
R186	1-218-756-11	METAL CHIP	150K	0.50%	1/10W	
R187	1-216-627-11	METAL CHIP	100	0.50%	1/10W	
R188	1-218-773-11	METAL CHIP	750K	0.50%	1/10W	
R189	1-216-627-11	METAL CHIP	100	0.50%	1/10W	
R190	1-218-764-11	METAL CHIP	330K	0.50%	1/10W	
R191	1-218-764-11	METAL CHIP	330K	0.50%	1/10W	
R192	1-216-699-11	METAL CHIP	100K	0.50%	1/10W	
R194	1-247-807-31	CARBON	100	5%	1/4W	
R195	1-216-627-11	METAL CHIP	100	0.50%	1/10W	
R201	1-216-025-91	RES,CHIP	100	5%	1/10W	
R202	1-216-025-91	RES,CHIP	100	5%	1/10W	
R203	1-216-025-91	RES,CHIP	100	5%	1/10W	
R204	1-216-685-11	METAL CHIP	27K	0.50%	1/10W	
R205	1-216-685-11	METAL CHIP	27K	0.50%	1/10W	
R206	1-216-001-00	RES,CHIP	10	5%	1/10W	
R207	1-216-001-00	RES,CHIP	10	5%	1/10W	
R208	1-216-627-11	METAL CHIP	100	0.50%	1/10W	
R209	1-216-659-11	METAL CHIP	2.2K	0.50%	1/10W	
R210	1-249-417-11	CARBON	1K	5%	1/4W	
R211	1-249-417-11	CARBON	1K	5%	1/4W	
R212	1-216-073-00	RES,CHIP	10K	5%	1/10W	
R213	1-216-073-00	RES,CHIP	10K	5%	1/10W	
R214	1-214-792-00	METAL	1	1%	1/2W	
R215	1-216-659-11	METAL CHIP	2.2K	0.50%	1/10W	
R216	1-214-792-00	METAL	1	1%	1/2W	
R217	1-216-675-11	METAL CHIP	10K	0.50%	1/10W	
R218	1-216-675-11	METAL CHIP	10K	0.50%	1/10W	
R219	1-216-001-00	RES,CHIP	10	5%	1/10W	
R220	1-216-001-00	RES,CHIP	10	5%	1/10W	
R221	1-216-627-11	METAL CHIP	100	0.50%	1/10W	
R222	1-216-659-11	METAL CHIP	2.2K	0.50%	1/10W	
R223	1-249-417-11	CARBON	1K	5%	1/4W	
R224	1-216-073-00	RES,CHIP	10K	5%	1/10W	
R225	1-214-792-00	METAL	1	1%	1/2W	
R226	1-249-417-11	CARBON	1K	5%	1/4W	
R227	1-216-073-00	RES,CHIP	10K	5%	1/10W	
R228	1-216-025-91	RES,CHIP	100	5%	1/10W	
R229	1-216-659-11	METAL CHIP	2.2K	0.50%	1/10W	
R230	1-214-792-00	METAL	1	1%	1/2W	
R231	1-216-685-11	METAL CHIP	27K	0.50%	1/10W	
R232	1-216-685-11	METAL CHIP	27K	0.50%	1/10W	
R233	1-216-001-00	RES,CHIP	10	5%	1/10W	
R234	1-216-001-00	RES,CHIP	10	5%	1/10W	
R235	1-216-659-11	METAL CHIP	2.2K	0.50%	1/10W	
R236	1-249-417-11	CARBON	1K	5%	1/4W	
R237	1-216-073-00	RES,CHIP	10K	5%	1/10W	
R238	1-214-792-00	METAL	1	1%	1/2W	
R239	1-249-417-11	CARBON	1K	5%	1/4W	

Ref.No.	Part No.	Description			Remark
R240	1-216-097-91	RES,CHIP	100K	5%	1/10W
R241	1-216-073-00	RES,CHIP	10K	5%	1/10W
R242	1-216-659-11	METAL CHIP	2.2K	0.50%	1/10W
R243	1-214-792-00	METAL	1	1%	1/2W
R244	1-216-065-91	RES,CHIP	4.7K	5%	1/10W
R245	1-216-627-11	METAL CHIP	100	0.50%	1/10W
R246	1-216-675-11	METAL CHIP	10K	0.50%	1/10W
R247	1-216-675-11	METAL CHIP	10K	0.50%	1/10W
R248	1-216-001-00	RES,CHIP	10	5%	1/10W
R249	1-216-001-00	RES,CHIP	10	5%	1/10W
R250	1-216-627-11	METAL CHIP	100	0.50%	1/10W
R251	1-216-659-11	METAL CHIP	2.2K	0.50%	1/10W
R252	1-249-417-11	CARBON	1K	5%	1/4W
R253	1-249-417-11	CARBON	1K	5%	1/4W
R254	1-216-073-00	RES,CHIP	10K	5%	1/10W
R255	1-216-073-00	RES,CHIP	10K	5%	1/10W
R256	1-214-792-00	METAL	1	1%	1/2W
R257	1-216-659-11	METAL CHIP	2.2K	0.50%	1/10W
R258	1-214-792-00	METAL	1	1%	1/2W
R259	1-216-685-11	METAL CHIP	27K	0.50%	1/10W
R260	1-216-685-11	METAL CHIP	27K	0.50%	1/10W
R261	1-216-001-00	RES,CHIP	10	5%	1/10W
R262	1-216-001-00	RES,CHIP	10	5%	1/10W
R263	1-216-659-11	METAL CHIP	2.2K	0.50%	1/10W
R264	1-249-417-11	CARBON	1K	5%	1/4W
R265	1-216-073-00	RES,CHIP	10K	5%	1/10W
R266	1-214-792-00	METAL	1	1%	1/2W
R267	1-249-417-11	CARBON	1K	5%	1/4W
R268	1-216-073-00	RES,CHIP	10K	5%	1/10W
R269	1-216-659-11	METAL CHIP	2.2K	0.50%	1/10W
R270	1-214-792-00	METAL	1	1%	1/2W
R271	1-216-675-11	METAL CHIP	10K	0.50%	1/10W
R272	1-216-675-11	METAL CHIP	10K	0.50%	1/10W
R273	1-216-001-00	RES,CHIP	10	5%	1/10W
R274	1-216-001-00	RES,CHIP	10	5%	1/10W
R275	1-216-659-11	METAL CHIP	2.2K	0.50%	1/10W
R276	1-249-417-11	CARBON	1K	5%	1/4W
R277	1-216-073-00	RES,CHIP	10K	5%	1/10W
R278	1-214-792-00	METAL	1	1%	1/2W
R279	1-249-417-11	CARBON	1K	5%	1/4W
R280	1-216-073-00	RES,CHIP	10K	5%	1/10W
R281	1-216-627-11	METAL CHIP	100	0.50%	1/10W
R282	1-216-659-11	METAL CHIP	2.2K	0.50%	1/10W
R283	1-214-792-00	METAL	1	1%	1/2W
R284	1-216-627-11	METAL CHIP	100	0.50%	1/10W
R300	1-216-671-11	METAL CHIP	6.8K	0.50%	1/10W
R301	1-247-807-31	CARBON	100	5%	1/4W
	<RELAY>				
RY100	1-515-716-11	RELAY (TQ2-5V)			
RY101	1-515-716-11	RELAY (TQ2-5V)			
RY102	1-515-716-11	RELAY (TQ2-5V)			
	<TEST PIN>				
TP1	* 1-537-864-11	PIN, POST			
TP2	* 1-537-864-11	PIN, POST			
TP3	* 1-537-864-11	PIN, POST			
TP102	* 1-537-864-11	PIN, POST			
TP201	* 1-537-864-11	PIN, POST			

****

* A-1346-778-A DB COMPLETE PC BOARD
****

<CAPACITOR>

Ref.No.	Part No.	Description			Remark
C101	1-163-031-11	CERAMIC CHIP	0.01μF		50V
C103	1-163-031-11	CERAMIC CHIP	0.01μF		50V
C105	1-164-004-11	CERAMIC CHIP	0.1μF	10%	25V
C106	1-163-031-11	CERAMIC CHIP	0.01μF		50V
C107	1-126-964-11	ELECT	10μF	20%	50V
C108	1-163-031-11	CERAMIC CHIP	0.01μF		50V
C109	1-126-964-11	ELECT	10μF	20%	50V
C110	1-164-004-11	CERAMIC CHIP	0.1μF	10%	25V
C201	1-163-031-11	CERAMIC CHIP	0.01μF		50V
C202	1-163-031-11	CERAMIC CHIP	0.01μF		50V
C203	1-163-031-11	CERAMIC CHIP	0.01μF		50V
C204	1-163-031-11	CERAMIC CHIP	0.01μF		50V
C205	1-164-004-11	CERAMIC CHIP	0.1μF	10%	25V
C206	1-163-031-11	CERAMIC CHIP	0.01μF		50V
C207	1-126-964-11	ELECT	10μF	20%	50V
C208	1-163-031-11	CERAMIC CHIP	0.01μF		50V
C209	1-126-964-11	ELECT	10μF	20%	50V
C210	1-164-004-11	CERAMIC CHIP	0.1μF	10%	25V
C211	1-126-960-11	ELECT	1μF	20%	50V
C301	1-163-031-11	CERAMIC CHIP	0.01μF		50V
C302	1-163-031-11	CERAMIC CHIP	0.01μF		50V
C305	1-164-004-11	CERAMIC CHIP	0.1μF	10%	25V
C306	1-163-031-11	CERAMIC CHIP	0.01μF		50V
C307	1-126-964-11	ELECT	10μF	20%	50V
C308	1-163-031-11	CERAMIC CHIP	0.01μF		50V
C309	1-126-964-11	ELECT	10μF	20%	50V
C310	1-164-004-11	CERAMIC CHIP	0.1μF	10%	25V
C401	1-163-031-11	CERAMIC CHIP	0.01μF		50V
C402	1-163-031-11	CERAMIC CHIP	0.01μF		50V
C403	1-163-031-11	CERAMIC CHIP	0.01μF		50V
C404	1-163-031-11	CERAMIC CHIP	0.01μF		50V
C405	1-164-004-11	CERAMIC CHIP	0.1μF	10%	25V
C406	1-163-031-11	CERAMIC CHIP	0.01μF		50V
C407	1-126-964-11	ELECT	10μF	20%	50V
C408	1-163-031-11	CERAMIC CHIP	0.01μF		50V
C409	1-126-964-11	ELECT	10μF	20%	50V
C410	1-164-004-11	CERAMIC CHIP	0.1μF	10%	25V
C503	1-163-031-11	CERAMIC CHIP	0.01μF		50V
C504	1-163-031-11	CERAMIC CHIP	0.01μF		50V
C507	1-163-031-11	CERAMIC CHIP	0.01μF		50V
C508	1-163-031-11	CERAMIC CHIP	0.01μF		50V
C601	1-164-004-11	CERAMIC CHIP	0.1μF	10%	25V
C602	1-126-964-11	ELECT	10μF	20%	50V
C603	1-163-031-11	CERAMIC CHIP	0.01μF		50V
C604	1-126-964-11	ELECT	10μF	20%	50V
C605	1-163-031-11	CERAMIC CHIP	0.01μF		50V
C606	1-164-004-11	CERAMIC CHIP	0.1μF	10%	25V

DB

Ref.No.	Part No.	Description			Remark
C607	1-163-031-11	CERAMIC CHIP 0.01μF			50V
C608	1-163-031-11	CERAMIC CHIP 0.01μF			50V
C609	1-163-031-11	CERAMIC CHIP 0.01μF			50V
C610	1-163-031-11	CERAMIC CHIP 0.01μF			50V
C611	1-164-004-11	CERAMIC CHIP 0.1μF		10%	25V
C612	1-126-964-11	ELECT	10μF	20%	50V
C613	1-163-031-11	CERAMIC CHIP 0.01μF			50V
C614	1-126-964-11	ELECT	10μF	20%	50V
C615	1-163-031-11	CERAMIC CHIP 0.01μF			50V
C616	1-164-004-11	CERAMIC CHIP 0.1μF		10%	25V
C619	1-163-031-11	CERAMIC CHIP 0.01μF			50V
C620	1-163-031-11	CERAMIC CHIP 0.01μF			50V
C621	1-163-031-11	CERAMIC CHIP 0.01μF			50V
C622	1-163-031-11	CERAMIC CHIP 0.01μF			50V
C623	1-163-031-11	CERAMIC CHIP 0.01μF			50V
C624	1-163-031-11	CERAMIC CHIP 0.01μF			50V
C625	1-163-031-11	CERAMIC CHIP 0.01μF			50V
C632	1-107-725-11	CERAMIC CHIP 0.1μF		10%	16V
C633	1-126-964-11	ELECT	10μF	20%	50V
C635	1-126-933-11	ELECT	100μF	20%	16V
C636	1-163-031-11	CERAMIC CHIP 0.01μF			50V
C637	1-126-964-11	ELECT	10μF	20%	50V
C638	1-107-725-11	CERAMIC CHIP 0.1μF		10%	16V
C639	1-163-031-11	CERAMIC CHIP 0.01μF			50V
C640	1-126-933-11	ELECT	100μF	20%	16V
C641	1-126-965-11	ELECT	22μF	20%	50V
C643	1-126-933-11	ELECT	100μF	20%	16V
C701	1-164-004-11	CERAMIC CHIP 0.1μF		10%	25V
C702	1-126-964-11	ELECT	10μF	20%	50V
C703	1-163-031-11	CERAMIC CHIP 0.01μF			50V
C704	1-126-964-11	ELECT	10μF	20%	50V
C705	1-163-031-11	CERAMIC CHIP 0.01μF			50V
C706	1-164-004-11	CERAMIC CHIP 0.1μF		10%	25V
C709	1-164-004-11	CERAMIC CHIP 0.1μF		10%	25V
C710	1-126-964-11	ELECT	10μF	20%	50V
C711	1-163-031-11	CERAMIC CHIP 0.01μF			50V
C712	1-126-964-11	ELECT	10μF	20%	50V
C713	1-163-031-11	CERAMIC CHIP 0.01μF			50V
C714	1-164-004-11	CERAMIC CHIP 0.1μF		10%	25V
C715	1-163-031-11	CERAMIC CHIP 0.01μF			50V
C716	1-163-031-11	CERAMIC CHIP 0.01μF			50V
C717	1-126-965-11	ELECT	22μF	20%	50V
C718	1-126-965-11	ELECT	22μF	20%	50V
C903	1-163-031-11	CERAMIC CHIP 0.01μF			50V
C904	1-163-031-11	CERAMIC CHIP 0.01μF			50V
C911	1-163-031-11	CERAMIC CHIP 0.01μF			50V
C912	1-163-031-11	CERAMIC CHIP 0.01μF			50V
C913	1-163-031-11	CERAMIC CHIP 0.01μF			50V
C914	1-163-031-11	CERAMIC CHIP 0.01μF			50V
C915	1-163-031-11	CERAMIC CHIP 0.01μF			50V
C916	1-163-031-11	CERAMIC CHIP 0.01μF			50V
C917	1-163-031-11	CERAMIC CHIP 0.01μF			50V
C918	1-163-031-11	CERAMIC CHIP 0.01μF			50V
C919	1-163-275-11	CERAMIC CHIP 0.001μF		5%	50V
C920	1-163-031-11	CERAMIC CHIP 0.01μF			50V
C921	1-163-031-11	CERAMIC CHIP 0.01μF			50V
C922	1-163-031-11	CERAMIC CHIP 0.01μF			50V
C923	1-163-031-11	CERAMIC CHIP 0.01μF			50V

Ref.No.	Part No.	Description	Remark
C926	1-163-031-11	CERAMIC CHIP 0.01μF	50V
		<CONNECTOR>	
CN180	* 1-778-891-11	CONNECTOR, BOARD TO BOARD	
		<DIODE>	
D601	8-719-053-18	DIODE 1SR154-400TE-25	
D602	8-719-053-18	DIODE 1SR154-400TE-25	
D603	8-719-056-76	DIODE UDZ-TE-17-3.6B	
D604	8-719-404-50	DIODE MA111-TX	
D605	8-719-976-99	DIODE DTZ5.1B	
D901	8-719-404-50	DIODE MA111-TX	
D902	8-719-404-50	DIODE MA111-TX	
		<IC>	
IC101	8-759-286-47	IC PC74HC4053D-T	
IC102	8-759-457-54	IC AD835AR-REEL7	
IC201	8-759-286-47	IC PC74HC4053D-T	
IC202	8-759-457-54	IC AD835AR-REEL7	
IC203	8-759-392-64	IC AD828AR	
IC301	8-759-286-47	IC PC74HC4053D-T	
IC302	8-759-457-54	IC AD835AR-REEL7	
IC401	8-759-286-47	IC PC74HC4053D-T	
IC402	8-759-457-54	IC AD835AR-REEL7	
IC403	8-759-392-64	IC AD828AR	
IC501	8-759-549-40	IC AD826AR-REEL	
IC503	8-759-392-64	IC AD828AR	
IC601	8-759-457-54	IC AD835AR-REEL7	
IC602	8-759-392-64	IC AD828AR	
IC603	8-759-392-64	IC AD828AR	
IC604	8-759-457-54	IC AD835AR-REEL7	
IC606	8-759-381-53	IC UPC814G2-E2	
IC607	8-759-286-47	IC PC74HC4053D-T	
IC608	8-759-381-53	IC UPC814G2-E2	
IC609	8-759-392-64	IC AD828AR	
IC612	8-759-539-89	IC LM2990SX-5.0	
IC613	8-759-460-74	IC BA05FP-E2	
IC614	8-759-242-74	IC TC7W04F	
IC701	8-759-457-54	IC AD835AR-REEL7	
IC702	8-759-392-64	IC AD828AR	
IC703	8-759-457-54	IC AD835AR-REEL7	
IC902	8-759-286-47	IC PC74HC4053D-T	
IC905	8-759-392-64	IC AD828AR	
IC906	8-759-421-87	IC UPC319G2-E2	
IC907	8-759-925-85	IC SN74HC32ANS	
IC908	8-759-100-96	IC UPC4558G2	
IC909	8-759-381-53	IC UPC814G2-E2	
IC910	8-759-286-47	IC PC74HC4053D-T	
IC911	8-759-908-15	IC TL431CLP	
IC912	8-759-381-53	IC UPC814G2-E2	
		<COIL>	
L601	1-412-533-21	INDUCTOR 47μH	
L602	1-412-533-21	INDUCTOR 47μH	

Ref.No.	Part No.	Description	Remark
	<TRANSISTOR>		
Q101	8-729-216-22	TRANSISTOR 2SA1162-G	
Q102	8-729-230-49	TRANSISTOR 2SC2712-YG	
Q103	8-729-026-57	TRANSISTOR FMS1A-T148	
Q104	8-729-926-23	TRANSISTOR FMW5	
Q105	8-729-216-22	TRANSISTOR 2SA1162-G	
Q106	8-729-230-49	TRANSISTOR 2SC2712-YG	
Q107	8-729-926-23	TRANSISTOR FMW5	
Q108	8-729-026-57	TRANSISTOR FMS1A-T148	
Q201	8-729-216-22	TRANSISTOR 2SA1162-G	
Q202	8-729-230-49	TRANSISTOR 2SC2712-YG	
Q203	8-729-926-23	TRANSISTOR FMW5	
Q204	8-729-026-57	TRANSISTOR FMS1A-T148	
Q205	8-729-216-22	TRANSISTOR 2SA1162-G	
Q206	8-729-230-49	TRANSISTOR 2SC2712-YG	
Q207	8-729-926-23	TRANSISTOR FMW5	
Q208	8-729-026-57	TRANSISTOR FMS1A-T148	
Q301	8-729-216-22	TRANSISTOR 2SA1162-G	
Q302	8-729-230-49	TRANSISTOR 2SC2712-YG	
Q303	8-729-926-23	TRANSISTOR FMW5	
Q304	8-729-026-57	TRANSISTOR FMS1A-T148	
Q305	8-729-216-22	TRANSISTOR 2SA1162-G	
Q306	8-729-230-49	TRANSISTOR 2SC2712-YG	
Q307	8-729-926-23	TRANSISTOR FMW5	
Q308	8-729-026-57	TRANSISTOR FMS1A-T148	
Q401	8-729-216-22	TRANSISTOR 2SA1162-G	
Q402	8-729-230-49	TRANSISTOR 2SC2712-YG	
Q403	8-729-926-23	TRANSISTOR FMW5	
Q404	8-729-026-57	TRANSISTOR FMS1A-T148	
Q405	8-729-216-22	TRANSISTOR 2SA1162-G	
Q406	8-729-230-49	TRANSISTOR 2SC2712-YG	
Q407	8-729-926-23	TRANSISTOR FMW5	
Q408	8-729-026-57	TRANSISTOR FMS1A-T148	
Q501	8-729-216-22	TRANSISTOR 2SA1162-G	
Q502	8-729-230-49	TRANSISTOR 2SC2712-YG	
Q503	8-729-926-23	TRANSISTOR FMW5	
Q504	8-729-026-57	TRANSISTOR FMS1A-T148	
Q601	8-729-926-23	TRANSISTOR FMW5	
Q602	8-729-026-57	TRANSISTOR FMS1A-T148	
Q603	8-729-216-22	TRANSISTOR 2SA1162-G	
Q604	8-729-230-49	TRANSISTOR 2SC2712-YG	
Q605	8-729-926-23	TRANSISTOR FMW5	
Q606	8-729-026-57	TRANSISTOR FMS1A-T148	
Q607	8-729-216-22	TRANSISTOR 2SA1162-G	
Q608	8-729-230-49	TRANSISTOR 2SC2712-YG	
Q609	8-729-230-49	TRANSISTOR 2SC2712-YG	
Q610	1-801-806-11	TRANSISTOR DTC144EKA-T146	
Q611	8-729-216-22	TRANSISTOR 2SA1162-G	
Q612	1-801-806-11	TRANSISTOR DTC144EKA-T146	
Q613	1-801-806-11	TRANSISTOR DTC144EKA-T146	
Q614	1-801-806-11	TRANSISTOR DTC144EKA-T146	
Q701	8-729-926-23	TRANSISTOR FMW5	
Q702	8-729-026-57	TRANSISTOR FMS1A-T148	
Q703	8-729-216-22	TRANSISTOR 2SA1162-G	
Q704	8-729-230-49	TRANSISTOR 2SC2712-YG	
Q705	8-729-926-23	TRANSISTOR FMW5	
Q706	8-729-026-57	TRANSISTOR FMS1A-T148	
Q707	8-729-216-22	TRANSISTOR 2SA1162-G	
Q708	8-729-230-49	TRANSISTOR 2SC2712-YG	
Q709	8-729-926-23	TRANSISTOR FMW5	
Q710	8-729-216-22	TRANSISTOR 2SA1162-G	
Q711	8-729-230-49	TRANSISTOR 2SC2712-YG	
Q712	8-729-026-57	TRANSISTOR FMS1A-T148	
Q901	8-729-926-23	TRANSISTOR FMW5	
Q902	8-729-026-57	TRANSISTOR FMS1A-T148	
Q903	8-729-216-22	TRANSISTOR 2SA1162-G	
Q904	8-729-230-49	TRANSISTOR 2SC2712-YG	

Ref.No.	Part No.	Description			Remark
	<RESISTOR>				
R101	1-216-659-11	METAL CHIP	2.2K	0.50%	1/10W
R102	1-216-025-91	RES,CHIP	100	5%	1/10W
R103	1-216-025-91	RES,CHIP	100	5%	1/10W
R104	1-216-659-11	METAL CHIP	2.2K	0.50%	1/10W
R105	1-216-025-91	RES,CHIP	100	5%	1/10W
R106	1-216-025-91	RES,CHIP	100	5%	1/10W
R107	1-216-659-11	METAL CHIP	2.2K	0.50%	1/10W
R108	1-216-025-91	RES,CHIP	100	5%	1/10W
R109	1-216-025-91	RES,CHIP	100	5%	1/10W
R110	1-216-659-11	METAL CHIP	2.2K	0.50%	1/10W
R111	1-216-659-11	METAL CHIP	2.2K	0.50%	1/10W
R112	1-216-025-91	RES,CHIP	100	5%	1/10W
R113	1-216-025-91	RES,CHIP	100	5%	1/10W
R114	1-216-659-11	METAL CHIP	2.2K	0.50%	1/10W
R115	1-216-025-91	RES,CHIP	100	5%	1/10W
R116	1-216-659-11	METAL CHIP	2.2K	0.50%	1/10W
R117	1-216-025-91	RES,CHIP	100	5%	1/10W
R118	1-216-025-91	RES,CHIP	100	5%	1/10W
R119	1-216-025-91	RES,CHIP	100	5%	1/10W
R120	1-216-659-11	METAL CHIP	2.2K	0.50%	1/10W
R121	1-216-679-11	METAL CHIP	15K	0.50%	1/10W
R122	1-216-669-11	METAL CHIP	5.6K	0.50%	1/10W
R123	1-216-667-11	METAL CHIP	4.7K	0.50%	1/10W
R124	1-216-663-11	METAL CHIP	3.3K	0.50%	1/10W
R125	1-216-663-11	METAL CHIP	3.3K	0.50%	1/10W
R126	1-216-643-11	METAL CHIP	470	0.50%	1/10W
R127	1-216-659-11	METAL CHIP	2.2K	0.50%	1/10W
R128	1-216-687-11	METAL CHIP	33K	0.50%	1/10W
R129	1-216-659-11	METAL CHIP	2.2K	0.50%	1/10W
R130	1-216-661-11	METAL CHIP	2.7K	0.50%	1/10W
R131	1-216-647-11	METAL CHIP	680	0.50%	1/10W
R132	1-216-659-11	METAL CHIP	2.2K	0.50%	1/10W
R201	1-216-659-11	METAL CHIP	2.2K	0.50%	1/10W
R202	1-216-025-91	RES,CHIP	100	5%	1/10W
R203	1-216-025-91	RES,CHIP	100	5%	1/10W
R204	1-216-659-11	METAL CHIP	2.2K	0.50%	1/10W
R205	1-216-025-91	RES,CHIP	100	5%	1/10W
R206	1-216-659-11	METAL CHIP	2.2K	0.50%	1/10W
R207	1-216-025-91	RES,CHIP	100	5%	1/10W
R208	1-216-025-91	RES,CHIP	100	5%	1/10W
R209	1-216-659-11	METAL CHIP	2.2K	0.50%	1/10W
R210	1-216-025-91	RES,CHIP	100	5%	1/10W
R211	1-216-659-11	METAL CHIP	2.2K	0.50%	1/10W
R212	1-216-025-91	RES,CHIP	100	5%	1/10W
R213	1-216-025-91	RES,CHIP	100	5%	1/10W
R214	1-216-659-11	METAL CHIP	2.2K	0.50%	1/10W

DB

Ref.No.	Part No.	Description			Remark
R215	1-216-025-91	RES,CHIP	100	5%	1/10W
R216	1-216-659-11	METAL CHIP	2.2K	0.50%	1/10W
R217	1-216-025-91	RES,CHIP	100	5%	1/10W
R218	1-216-025-91	RES,CHIP	100	5%	1/10W
R219	1-216-659-11	METAL CHIP	2.2K	0.50%	1/10W
R220	1-216-025-91	RES,CHIP	100	5%	1/10W
R221	1-216-679-11	METAL CHIP	15K	0.50%	1/10W
R222	1-216-669-11	METAL CHIP	5.6K	0.50%	1/10W
R223	1-216-667-11	METAL CHIP	4.7K	0.50%	1/10W
R224	1-216-663-11	METAL CHIP	3.3K	0.50%	1/10W
R225	1-216-663-11	METAL CHIP	3.3K	0.50%	1/10W
R226	1-216-687-11	METAL CHIP	33K	0.50%	1/10W
R227	1-216-659-11	METAL CHIP	2.2K	0.50%	1/10W
R228	1-216-643-11	METAL CHIP	470	0.50%	1/10W
R229	1-216-659-11	METAL CHIP	2.2K	0.50%	1/10W
R230	1-216-661-11	METAL CHIP	2.7K	0.50%	1/10W
R231	1-216-667-11	METAL CHIP	4.7K	0.50%	1/10W
R232	1-216-659-11	METAL CHIP	2.2K	0.50%	1/10W
R233	1-216-659-11	METAL CHIP	2.2K	0.50%	1/10W
R301	1-216-659-11	METAL CHIP	2.2K	0.50%	1/10W
R302	1-216-025-91	RES,CHIP	100	5%	1/10W
R303	1-216-025-91	RES,CHIP	100	5%	1/10W
R304	1-216-659-11	METAL CHIP	2.2K	0.50%	1/10W
R305	1-216-025-91	RES,CHIP	100	5%	1/10W
R306	1-216-025-91	RES,CHIP	100	5%	1/10W
R307	1-216-659-11	METAL CHIP	2.2K	0.50%	1/10W
R308	1-216-025-91	RES,CHIP	100	5%	1/10W
R309	1-216-659-11	METAL CHIP	2.2K	0.50%	1/10W
R310	1-216-025-91	RES,CHIP	100	5%	1/10W
R311	1-216-659-11	METAL CHIP	2.2K	0.50%	1/10W
R312	1-216-025-91	RES,CHIP	100	5%	1/10W
R313	1-216-025-91	RES,CHIP	100	5%	1/10W
R314	1-216-025-91	RES,CHIP	100	5%	1/10W
R315	1-216-659-11	METAL CHIP	2.2K	0.50%	1/10W
R316	1-216-025-91	RES,CHIP	100	5%	1/10W
R317	1-216-659-11	METAL CHIP	2.2K	0.50%	1/10W
R318	1-216-025-91	RES,CHIP	100	5%	1/10W
R319	1-216-659-11	METAL CHIP	2.2K	0.50%	1/10W
R320	1-216-025-91	RES,CHIP	100	5%	1/10W
R321	1-216-677-11	METAL CHIP	12K	0.50%	1/10W
R322	1-216-665-11	METAL CHIP	3.9K	0.50%	1/10W
R323	1-216-667-11	METAL CHIP	4.7K	0.50%	1/10W
R324	1-216-663-11	METAL CHIP	3.3K	0.50%	1/10W
R325	1-216-663-11	METAL CHIP	3.3K	0.50%	1/10W
R326	1-216-687-11	METAL CHIP	33K	0.50%	1/10W
R327	1-216-659-11	METAL CHIP	2.2K	0.50%	1/10W
R328	1-216-643-11	METAL CHIP	470	0.50%	1/10W
R329	1-216-661-11	METAL CHIP	2.7K	0.50%	1/10W
R330	1-216-677-11	METAL CHIP	12K	0.50%	1/10W
R331	1-216-649-11	METAL CHIP	820	0.50%	1/10W
R332	1-216-659-11	METAL CHIP	2.2K	0.50%	1/10W
R401	1-216-659-11	METAL CHIP	2.2K	0.50%	1/10W
R402	1-216-025-91	RES,CHIP	100	5%	1/10W
R403	1-216-025-91	RES,CHIP	100	5%	1/10W
R404	1-216-659-11	METAL CHIP	2.2K	0.50%	1/10W
R405	1-216-025-91	RES,CHIP	100	5%	1/10W
R406	1-216-025-91	RES,CHIP	100	5%	1/10W
R407	1-216-659-11	METAL CHIP	2.2K	0.50%	1/10W
R408	1-216-025-91	RES,CHIP	100	5%	1/10W
R409	1-216-659-11	METAL CHIP	2.2K	0.50%	1/10W
R410	1-216-025-91	RES,CHIP	100	5%	1/10W
R411	1-216-659-11	METAL CHIP	2.2K	0.50%	1/10W
R412	1-216-025-91	RES,CHIP	100	5%	1/10W
R413	1-216-025-91	RES,CHIP	100	5%	1/10W
R414	1-216-025-91	RES,CHIP	100	5%	1/10W
R415	1-216-659-11	METAL CHIP	2.2K	0.50%	1/10W
R416	1-216-659-11	METAL CHIP	2.2K	0.50%	1/10W
R417	1-216-025-91	RES,CHIP	100	5%	1/10W
R418	1-216-659-11	METAL CHIP	2.2K	0.50%	1/10W
R419	1-216-025-91	RES,CHIP	100	5%	1/10W
R420	1-216-025-91	RES,CHIP	100	5%	1/10W
R421	1-216-679-11	METAL CHIP	15K	0.50%	1/10W
R422	1-216-669-11	METAL CHIP	5.6K	0.50%	1/10W
R423	1-216-667-11	METAL CHIP	4.7K	0.50%	1/10W
R424	1-216-663-11	METAL CHIP	3.3K	0.50%	1/10W
R425	1-216-663-11	METAL CHIP	3.3K	0.50%	1/10W
R426	1-216-687-11	METAL CHIP	33K	0.50%	1/10W
R427	1-216-659-11	METAL CHIP	2.2K	0.50%	1/10W
R428	1-216-643-11	METAL CHIP	470	0.50%	1/10W
R429	1-216-659-11	METAL CHIP	2.2K	0.50%	1/10W
R430	1-216-665-11	METAL CHIP	3.9K	0.50%	1/10W
R431	1-216-643-11	METAL CHIP	470	0.50%	1/10W
R432	1-216-659-11	METAL CHIP	2.2K	0.50%	1/10W
R501	1-216-025-91	RES,CHIP	100	5%	1/10W
R502	1-216-025-91	RES,CHIP	100	5%	1/10W
R503	1-216-663-11	METAL CHIP	3.3K	0.50%	1/10W
R504	1-216-663-11	METAL CHIP	3.3K	0.50%	1/10W
R505	1-216-659-11	METAL CHIP	2.2K	0.50%	1/10W
R506	1-216-025-91	RES,CHIP	100	5%	1/10W
R507	1-216-025-91	RES,CHIP	100	5%	1/10W
R508	1-216-025-91	RES,CHIP	100	5%	1/10W
R509	1-216-659-11	METAL CHIP	2.2K	0.50%	1/10W
R510	1-216-659-11	METAL CHIP	2.2K	0.50%	1/10W
R511	1-216-025-91	RES,CHIP	100	5%	1/10W
R512	1-216-025-91	RES,CHIP	100	5%	1/10W
R513	1-216-659-11	METAL CHIP	2.2K	0.50%	1/10W
R514	1-216-025-91	RES,CHIP	100	5%	1/10W
R515	1-216-667-11	METAL CHIP	4.7K	0.50%	1/10W
R516	1-216-667-11	METAL CHIP	4.7K	0.50%	1/10W
R517	1-216-667-11	METAL CHIP	4.7K	0.50%	1/10W
R518	1-216-687-11	METAL CHIP	33K	0.50%	1/10W
R519	1-216-663-11	METAL CHIP	3.3K	0.50%	1/10W
R520	1-216-663-11	METAL CHIP	3.3K	0.50%	1/10W
R521	1-216-667-11	METAL CHIP	4.7K	0.50%	1/10W
R522	1-216-667-11	METAL CHIP	4.7K	0.50%	1/10W
R523	1-216-667-11	METAL CHIP	4.7K	0.50%	1/10W
R524	1-216-687-11	METAL CHIP	33K	0.50%	1/10W
R525	1-216-663-11	METAL CHIP	3.3K	0.50%	1/10W
R526	1-216-663-11	METAL CHIP	3.3K	0.50%	1/10W
R601	1-216-665-11	METAL CHIP	3.9K	0.50%	1/10W
R602	1-216-659-11	METAL CHIP	2.2K	0.50%	1/10W
R603	1-216-665-11	METAL CHIP	3.9K	0.50%	1/10W
R604	1-216-659-11	METAL CHIP	2.2K	0.50%	1/10W
R605	1-216-643-11	METAL CHIP	470	0.50%	1/10W
R606	1-216-687-11	METAL CHIP	33K	0.50%	1/10W
R607	1-216-659-11	METAL CHIP	2.2K	0.50%	1/10W
R608	1-216-663-11	METAL CHIP	3.3K	0.50%	1/10W
R609	1-216-663-11	METAL CHIP	3.3K	0.50%	1/10W

Ref.No.	Part No.	Description			Remark
R610	1-216-667-11	METAL CHIP	4.7K	0.50%	1/10W
R611	1-216-667-11	METAL CHIP	4.7K	0.50%	1/10W
R612	1-216-677-11	METAL CHIP	12K	0.50%	1/10W
R613	1-216-025-91	RES,CHIP	100	5%	1/10W
R614	1-216-025-91	RES,CHIP	100	5%	1/10W
R615	1-216-659-11	METAL CHIP	2.2K	0.50%	1/10W
R616	1-216-659-11	METAL CHIP	2.2K	0.50%	1/10W
R617	1-216-025-91	RES,CHIP	100	5%	1/10W
R618	1-216-025-91	RES,CHIP	100	5%	1/10W
R619	1-216-025-91	RES,CHIP	100	5%	1/10W
R620	1-216-025-91	RES,CHIP	100	5%	1/10W
R621	1-216-659-11	METAL CHIP	2.2K	0.50%	1/10W
R622	1-216-659-11	METAL CHIP	2.2K	0.50%	1/10W
R623	1-216-667-11	METAL CHIP	4.7K	0.50%	1/10W
R624	1-216-681-11	METAL CHIP	18K	0.50%	1/10W
R625	1-218-760-11	METAL CHIP	220K	0.50%	1/10W
R626	1-216-675-11	METAL CHIP	10K	0.50%	1/10W
R627	1-216-645-11	METAL CHIP	560	0.50%	1/10W
R628	1-216-659-11	METAL CHIP	2.2K	0.50%	1/10W
R629	1-216-665-11	METAL CHIP	3.9K	0.50%	1/10W
R630	1-216-659-11	METAL CHIP	2.2K	0.50%	1/10W
R631	1-216-643-11	METAL CHIP	470	0.50%	1/10W
R632	1-216-687-11	METAL CHIP	33K	0.50%	1/10W
R633	1-216-659-11	METAL CHIP	2.2K	0.50%	1/10W
R634	1-216-663-11	METAL CHIP	3.3K	0.50%	1/10W
R635	1-216-663-11	METAL CHIP	3.3K	0.50%	1/10W
R636	1-216-669-11	METAL CHIP	5.6K	0.50%	1/10W
R637	1-216-667-11	METAL CHIP	4.7K	0.50%	1/10W
R638	1-216-679-11	METAL CHIP	15K	0.50%	1/10W
R639	1-216-025-91	RES,CHIP	100	5%	1/10W
R640	1-216-025-91	RES,CHIP	100	5%	1/10W
R641	1-216-659-11	METAL CHIP	2.2K	0.50%	1/10W
R642	1-216-659-11	METAL CHIP	2.2K	0.50%	1/10W
R643	1-216-025-91	RES,CHIP	100	5%	1/10W
R644	1-216-025-91	RES,CHIP	100	5%	1/10W
R645	1-216-025-91	RES,CHIP	100	5%	1/10W
R646	1-216-025-91	RES,CHIP	100	5%	1/10W
R647	1-216-659-11	METAL CHIP	2.2K	0.50%	1/10W
R648	1-216-659-11	METAL CHIP	2.2K	0.50%	1/10W
R649	1-216-663-11	METAL CHIP	3.3K	0.50%	1/10W
R650	1-216-667-11	METAL CHIP	4.7K	0.50%	1/10W
R651	1-216-667-11	METAL CHIP	4.7K	0.50%	1/10W
R652	1-216-663-11	METAL CHIP	3.3K	0.50%	1/10W
R653	1-216-667-11	METAL CHIP	4.7K	0.50%	1/10W
R654	1-216-667-11	METAL CHIP	4.7K	0.50%	1/10W
R656	1-216-663-11	METAL CHIP	3.3K	0.50%	1/10W
R657	1-216-667-11	METAL CHIP	4.7K	0.50%	1/10W
R658	1-216-667-11	METAL CHIP	4.7K	0.50%	1/10W
R659	1-216-025-91	RES,CHIP	100	5%	1/10W
R660	1-216-667-11	METAL CHIP	4.7K	0.50%	1/10W
R661	1-216-667-11	METAL CHIP	4.7K	0.50%	1/10W
R662	1-216-667-11	METAL CHIP	4.7K	0.50%	1/10W
R671	1-216-667-11	METAL CHIP	4.7K	0.50%	1/10W
R672	1-216-679-11	METAL CHIP	15K	0.50%	1/10W
R673	1-216-669-11	METAL CHIP	5.6K	0.50%	1/10W
R674	1-216-667-11	METAL CHIP	4.7K	0.50%	1/10W
R675	1-216-667-11	METAL CHIP	4.7K	0.50%	1/10W
R676	1-216-017-91	RES,CHIP	47	5%	1/10W
R677	1-216-659-11	METAL CHIP	2.2K	0.50%	1/10W
R678	1-216-675-11	METAL CHIP	10K	0.50%	1/10W
R679	1-216-667-11	METAL CHIP	4.7K	0.50%	1/10W
R680	1-216-025-91	RES,CHIP	100	5%	1/10W
R681	1-216-025-91	RES,CHIP	100	5%	1/10W
R682	1-216-663-11	METAL CHIP	3.3K	0.50%	1/10W
R683	1-216-663-11	METAL CHIP	3.3K	0.50%	1/10W
R684	1-216-025-91	RES,CHIP	100	5%	1/10W
R685	1-218-756-11	METAL CHIP	150K	0.50%	1/10W
R701	1-216-667-11	METAL CHIP	4.7K	0.50%	1/10W
R702	1-216-667-11	METAL CHIP	4.7K	0.50%	1/10W
R703	1-216-659-11	METAL CHIP	2.2K	0.50%	1/10W
R704	1-216-659-11	METAL CHIP	2.2K	0.50%	1/10W
R705	1-216-643-11	METAL CHIP	470	0.50%	1/10W
R706	1-216-687-11	METAL CHIP	33K	0.50%	1/10W
R707	1-216-659-11	METAL CHIP	2.2K	0.50%	1/10W
R708	1-216-663-11	METAL CHIP	3.3K	0.50%	1/10W
R709	1-216-663-11	METAL CHIP	3.3K	0.50%	1/10W
R710	1-216-667-11	METAL CHIP	4.7K	0.50%	1/10W
R711	1-216-667-11	METAL CHIP	4.7K	0.50%	1/10W
R712	1-216-683-11	METAL CHIP	22K	0.50%	1/10W
R713	1-216-025-91	RES,CHIP	100	5%	1/10W
R714	1-216-025-91	RES,CHIP	100	5%	1/10W
R715	1-216-659-11	METAL CHIP	2.2K	0.50%	1/10W
R716	1-216-659-11	METAL CHIP	2.2K	0.50%	1/10W
R717	1-216-025-91	RES,CHIP	100	5%	1/10W
R718	1-216-025-91	RES,CHIP	100	5%	1/10W
R719	1-216-025-91	RES,CHIP	100	5%	1/10W
R720	1-216-025-91	RES,CHIP	100	5%	1/10W
R721	1-216-667-11	METAL CHIP	4.7K	0.50%	1/10W
R722	1-216-667-11	METAL CHIP	4.7K	0.50%	1/10W
R723	1-216-659-11	METAL CHIP	2.2K	0.50%	1/10W
R724	1-216-659-11	METAL CHIP	2.2K	0.50%	1/10W
R725	1-216-643-11	METAL CHIP	470	0.50%	1/10W
R726	1-216-687-11	METAL CHIP	33K	0.50%	1/10W
R727	1-216-659-11	METAL CHIP	2.2K	0.50%	1/10W
R728	1-216-663-11	METAL CHIP	3.3K	0.50%	1/10W
R729	1-216-663-11	METAL CHIP	3.3K	0.50%	1/10W
R730	1-216-667-11	METAL CHIP	4.7K	0.50%	1/10W
R731	1-216-667-11	METAL CHIP	4.7K	0.50%	1/10W
R732	1-216-683-11	METAL CHIP	22K	0.50%	1/10W
R733	1-216-025-91	RES,CHIP	100	5%	1/10W
R734	1-216-025-91	RES,CHIP	100	5%	1/10W
R735	1-216-659-11	METAL CHIP	2.2K	0.50%	1/10W
R736	1-216-659-11	METAL CHIP	2.2K	0.50%	1/10W
R737	1-216-025-91	RES,CHIP	100	5%	1/10W
R738	1-216-025-91	RES,CHIP	100	5%	1/10W
R739	1-216-025-91	RES,CHIP	100	5%	1/10W
R740	1-216-025-91	RES,CHIP	100	5%	1/10W
R741	1-216-659-11	METAL CHIP	2.2K	0.50%	1/10W
R742	1-216-659-11	METAL CHIP	2.2K	0.50%	1/10W
R743	1-216-659-11	METAL CHIP	2.2K	0.50%	1/10W
R744	1-216-659-11	METAL CHIP	2.2K	0.50%	1/10W
R745	1-216-025-91	RES,CHIP	100	5%	1/10W
R746	1-216-657-11	METAL CHIP	1.8K	0.50%	1/10W
R747	1-216-025-91	RES,CHIP	100	5%	1/10W
R748	1-216-025-91	RES,CHIP	100	5%	1/10W
R749	1-216-659-11	METAL CHIP	2.2K	0.50%	1/10W

DB EBR

Ref.No.	Part No.	Description			Remark
R750	1-216-659-11	METAL CHIP	2.2K	0.50%	1/10W
R751	1-216-025-91	RES,CHIP	100	5%	1/10W
R752	1-216-025-91	RES,CHIP	100	5%	1/10W
R753	1-216-025-91	RES,CHIP	100	5%	1/10W
R754	1-216-657-11	METAL CHIP	1.8K	0.50%	1/10W
R933	1-216-667-11	METAL CHIP	4.7K	0.50%	1/10W
R934	1-216-667-11	METAL CHIP	4.7K	0.50%	1/10W
R935	1-216-667-11	METAL CHIP	4.7K	0.50%	1/10W
R936	1-216-667-11	METAL CHIP	4.7K	0.50%	1/10W
R938	1-216-025-91	RES,CHIP	100	5%	1/10W
R939	1-216-025-91	RES,CHIP	100	5%	1/10W
R940	1-216-667-11	METAL CHIP	4.7K	0.50%	1/10W
R941	1-216-667-11	METAL CHIP	4.7K	0.50%	1/10W
R942	1-216-667-11	METAL CHIP	4.7K	0.50%	1/10W
R943	1-216-667-11	METAL CHIP	4.7K	0.50%	1/10W
R944	1-216-667-11	METAL CHIP	4.7K	0.50%	1/10W
R946	1-216-025-91	RES,CHIP	100	5%	1/10W
R947	1-216-025-91	RES,CHIP	100	5%	1/10W
R948	1-216-667-11	METAL CHIP	4.7K	0.50%	1/10W
R949	1-216-025-91	RES,CHIP	100	5%	1/10W
R951	1-216-033-00	RES,CHIP	220	5%	1/10W
R952	1-216-025-91	RES,CHIP	100	5%	1/10W
R953	1-216-025-91	RES,CHIP	100	5%	1/10W
R954	1-216-025-91	RES,CHIP	100	5%	1/10W
R955	1-216-025-91	RES,CHIP	100	5%	1/10W
R956	1-216-025-91	RES,CHIP	100	5%	1/10W
R957	1-216-025-91	RES,CHIP	100	5%	1/10W
R958	1-216-659-11	METAL CHIP	2.2K	0.50%	1/10W
R959	1-216-659-11	METAL CHIP	2.2K	0.50%	1/10W
R960	1-216-659-11	METAL CHIP	2.2K	0.50%	1/10W
R961	1-216-659-11	METAL CHIP	2.2K	0.50%	1/10W
R962	1-216-667-11	METAL CHIP	4.7K	0.50%	1/10W
R963	1-216-667-11	METAL CHIP	4.7K	0.50%	1/10W
R964	1-216-667-11	METAL CHIP	4.7K	0.50%	1/10W
R965	1-216-667-11	METAL CHIP	4.7K	0.50%	1/10W
R966	1-216-667-11	METAL CHIP	4.7K	0.50%	1/10W
R967	1-216-675-11	METAL CHIP	10K	0.50%	1/10W
R968	1-216-679-11	METAL CHIP	15K	0.50%	1/10W
R969	1-216-675-11	METAL CHIP	10K	0.50%	1/10W
R970	1-216-667-11	METAL CHIP	4.7K	0.50%	1/10W
R971	1-216-681-11	METAL CHIP	18K	0.50%	1/10W
R972	1-216-659-11	METAL CHIP	2.2K	0.50%	1/10W
R973	1-218-776-11	METAL CHIP	1M	0.50%	1/10W
R974	1-216-655-11	METAL CHIP	1.5K	0.50%	1/10W
R975	1-216-683-11	METAL CHIP	22K	0.50%	1/10W
R985	1-216-667-11	METAL CHIP	4.7K	0.50%	1/10W
R986	1-216-651-11	METAL CHIP	1K	0.50%	1/10W

<VARIABLE RESISTOR>

Ref.No.	Part No.	Description
RV101	1-238-802-11	RES, ADJ, CERMET 10K
RV102	1-238-798-11	RES, ADJ, CERMET 500
RV202	1-238-798-11	RES, ADJ, CERMET 500
RV301	1-238-802-11	RES, ADJ, CERMET 10K
RV302	1-238-798-11	RES, ADJ, CERMET 500
RV401	1-238-802-11	RES, ADJ, CERMET 10K
RV402	1-238-798-11	RES, ADJ, CERMET 500
RV501	1-238-798-11	RES, ADJ, CERMET 500
RV502	1-238-798-11	RES, ADJ, CERMET 500
RV601	1-238-798-11	RES, ADJ, CERMET 500
RV602	1-238-802-11	RES, ADJ, CERMET 10K
RV603	1-238-798-11	RES, ADJ, CERMET 500
RV604	1-238-802-11	RES, ADJ, CERMET 10K
RV701	1-238-798-11	RES, ADJ, CERMET 500
RV702	1-238-802-11	RES, ADJ, CERMET 10K
RV703	1-238-798-11	RES, ADJ, CERMET 500
RV704	1-238-802-11	RES, ADJ, CERMET 10K

****

*	A-1346-779-A	EBR COMPLETE PC BOARD (Include EBA, EBC Mounted PC BOARD) **********
	3-701-809-31	SCREW, TERMINAL (M3X8)
*	4-067-812-01	HOLDER (C), TR
	4-382-854-11	SCREW (M3X10), P, SW (+)
	4-382-854-11	SCREW (M3X10), P, SW (+)

<CAPACITOR>

Ref.No.	Part No.	Description			Remark
C100	1-107-921-91	ELECT	100μF	20%	63V
C101	1-107-921-91	ELECT	100μF	20%	63V
C108	1-107-369-11	MYLAR	0.068μF	10%	100V
C109	1-107-369-11	MYLAR	0.068μF	10%	100V
C110	1-107-923-11	ELECT	330μF	20%	63V
C111	1-107-923-11	ELECT	330μF	20%	63V
C112	1-107-914-11	ELECT	1000μF	20%	25V
C113	1-107-914-11	ELECT	1000μF	20%	25V
C114	1-136-481-11	MYLAR	0.0022μF	10%	100V
C115	1-137-150-11	MYLAR	0.01μF	10%	100V
C118	1-163-001-11	CERAMIC CHIP	220PF	10%	50V
C121	1-107-906-11	ELECT	10μF	20%	50V
C122	1-107-504-11	CERAMIC	10PF	0.5PF	500V
C123	1-115-339-11	CERAMIC CHIP	0.1μF	10%	50V
C140	1-128-526-11	ELECT	100μF	20%	25V
C141	1-107-906-11	ELECT	10μF	20%	50V
C142	1-128-526-11	ELECT	100μF	20%	25V
C143	1-107-906-11	ELECT	10μF	20%	50V
C150	1-128-526-11	ELECT	100μF	20%	25V
C151	1-163-021-91	CERAMIC CHIP	0.01μF	10%	50V
C152	1-104-653-11	ELECT	220μF	20%	16V
C153	1-128-526-11	ELECT	100μF	20%	25V
C154	1-163-021-91	CERAMIC CHIP	0.01μF	10%	50V
C155	1-104-653-11	ELECT	220μF	20%	16V
C156	1-163-251-11	CERAMIC CHIP	100PF	5%	50V
C157	1-163-021-91	CERAMIC CHIP	0.01μF	10%	50V
C158	1-163-021-91	CERAMIC CHIP	0.01μF	10%	50V
C159	1-107-909-11	ELECT	47μF	20%	50V
C160	1-107-909-11	ELECT	47μF	20%	50V
C161	1-163-021-91	CERAMIC CHIP	0.01μF	10%	50V
C162	1-163-021-91	CERAMIC CHIP	0.01μF	10%	50V
C163	1-136-169-00	FILM	0.22μF	5%	50V
C400	1-124-242-00	ELECT	33μF	20%	25V
C420	1-163-031-11	CERAMIC CHIP	0.01μF		50V
C421	1-163-031-11	CERAMIC CHIP	0.01μF		50V
C422	1-163-031-11	CERAMIC CHIP	0.01μF		50V

Ref.No.	Part No.	Description			Remark
C500	1-124-242-00	ELECT	33μF	20%	25V
C501	1-124-242-00	ELECT	33μF	20%	25V
C502	1-163-031-11	CERAMIC CHIP	0.01μF		50V
C503	1-163-031-11	CERAMIC CHIP	0.01μF		50V
C504	1-163-031-11	CERAMIC CHIP	0.01μF		50V
C505	1-163-227-11	CERAMIC CHIP	10PF	0.5PF	50V
C506	1-163-251-11	CERAMIC CHIP	100PF	5%	50V
C507	1-124-242-00	ELECT	33μF	20%	25V
C508	1-124-242-00	ELECT	33μF	20%	25V
C509	1-163-031-11	CERAMIC CHIP	0.01μF		50V
C510	1-163-031-11	CERAMIC CHIP	0.01μF		50V
C511	1-163-031-11	CERAMIC CHIP	0.01μF		50V
	<CONNECTOR>				
CN140	* 1-564-709-11	PIN, CONNECTOR (SMALL TYPE) 7P			
CN141	* 1-564-713-11	PIN, CONNECTOR (SMALL TYPE)11P			
CN142	* 1-564-713-11	PIN, CONNECTOR (SMALL TYPE)11P			
CN143	* 1-785-518-11	CONNECTOR, BOARD TO BOARD 15P			
CN144	* 1-774-249-11	CONNECTOR, BOARD TO BOARD 10P			
CN145	* 1-564-507-11	PLUG, CONNECTOR 4P			
CN168	* 1-785-517-11	CONNECTOR, BOARD TO BOARD 13P			
CN500	* 1-774-246-11	CONNECTOR, BOARD TO BOARD 10P			
	<DIODE>				
D100	8-719-106-89	DIODE RD15M-T1B2			
D101	8-719-106-89	DIODE RD15M-T1B2			
D102	8-719-025-10	DIODE D8LC20U			
D103	8-719-025-11	DIODE D8LC20UR			
D104	8-719-106-71	DIODE RD12M-B2			
D105	8-719-801-78	DIODE 1SS184			
D140	8-719-801-78	DIODE 1SS184			
D141	8-719-801-78	DIODE 1SS184			
D150	8-719-801-78	DIODE 1SS184			
D151	8-719-801-78	DIODE 1SS184			
D400	8-719-801-78	DIODE 1SS184			
D420	8-719-801-78	DIODE 1SS184			
D421	8-719-106-53	DIODE RD10M-B2			
	<FERRITE BEAD>				
FB100	1-410-396-41	FERRITE 0.45μH			
FB101	1-410-396-41	FERRITE 0.45μH			
FB102	1-410-396-41	FERRITE 0.45μH			
FB103	1-410-396-41	FERRITE 0.45μH			
FB104	1-410-396-41	FERRITE 0.45μH			
FB105	1-410-396-41	FERRITE 0.45μH			
	<IC>				
IC150	8-759-231-58	IC TA7812S			
IC151	8-759-701-88	IC NJM7912FA			
IC152	8-759-100-96	IC UPC4558G2			
IC153	8-759-336-63	IC LM675T			
IC400	8-759-988-13	IC LM393PS			
IC420	8-759-105-49	IC UPC319G2			
IC500	8-759-381-53	IC UPC814G2-E2			
IC501	8-759-984-88	IC LM6361M			

Ref.No.	Part No.	Description			Remark
	<COIL>				
L100	1-406-663-21	INDUCTOR 47μH			
L101	1-406-663-21	INDUCTOR 47μH			
L102	1-412-533-21	INDUCTOR 47μH			
L103	1-412-533-21	INDUCTOR 47μH			
L150	1-410-645-31	INDUCTOR 100μH			
L151	1-410-645-31	INDUCTOR 100μH			
L152	1-412-533-21	INDUCTOR 47μH			
L153	1-412-533-21	INDUCTOR 47μH			
L500	1-410-645-31	INDUCTOR 100μH			
L501	1-410-645-31	INDUCTOR 100μH			
	<TRANSISTOR>				
Q102	8-729-142-68	TRANSISTOR 2SJ143			
Q103	8-729-142-69	TRANSISTOR 2SK817			
Q104	8-729-207-89	TRANSISTOR 2SA1358-Y			
Q105	8-729-207-82	TRANSISTOR 2SC3421-Y			
Q106	8-729-021-76	TRANSISTOR 2SA1804-RO			
Q107	8-729-021-75	TRANSISTOR 2SC4689N-RO			
Q140	8-729-216-22	TRANSISTOR 2SA1162-G			
Q141	8-729-230-49	TRANSISTOR 2SC2712-YG			
Q400	1-801-806-11	TRANSISTOR DTC144EKA-T146			
Q420	8-729-230-49	TRANSISTOR 2SC2712-YG			
Q421	8-729-230-49	TRANSISTOR 2SC2712-YG			
Q422	8-729-230-49	TRANSISTOR 2SC2712-YG			
Q423	8-729-033-10	TRANSISTOR 2SC3776-CD-AA			
Q424	8-729-230-49	TRANSISTOR 2SC2712-YG			
Q425	8-729-216-22	TRANSISTOR 2SA1162-G			
Q426	8-729-033-10	TRANSISTOR 2SC3776-CD-AA			
Q427	8-729-230-49	TRANSISTOR 2SC2712-YG			
Q428	8-729-216-22	TRANSISTOR 2SA1162-G			
Q500	8-729-216-22	TRANSISTOR 2SA1162-G			
Q501	8-729-216-22	TRANSISTOR 2SA1162-G			
Q502	8-729-230-49	TRANSISTOR 2SC2712-YG			
Q503	8-729-230-49	TRANSISTOR 2SC2712-YG			
	<RESISTOR>				
R110	1-216-073-00	RES,CHIP	10K	5%	1/10W
R111	1-216-073-00	RES,CHIP	10K	5%	1/10W
R112	1-216-005-00	RES,CHIP	15	5%	1/10W
R113	1-216-005-00	RES,CHIP	15	5%	1/10W
R116	1-216-067-00	RES,CHIP	5.6K	5%	1/10W
R117	1-216-045-00	RES,CHIP	680	5%	1/10W
R118	1-216-025-91	RES,CHIP	100	5%	1/10W
R119	1-216-647-11	METAL CHIP	680	0.50%	1/10W
R120	1-215-875-11	METAL OXIDE	10K	5%	1/2W F
R121	1-216-623-11	METAL CHIP	68	0.50%	1/10W
R122	1-216-627-11	METAL CHIP	100	0.50%	1/10W
R123	1-249-393-11	CARBON	10	5%	1/4W
R124	1-249-393-11	CARBON	10	5%	1/4W
R125	1-216-345-11	METAL OXIDE	0.47	5%	1/2W F
R126	1-216-345-11	METAL OXIDE	0.47	5%	1/2W F
R127	1-216-480-11	METAL OXIDE	820	5%	3/2W F
R128	1-216-371-00	METAL OXIDE	1.5	5%	2/2W F
R129	1-216-480-11	METAL OXIDE	820	5%	3/2W F
R130	1-216-371-00	METAL OXIDE	1.5	5%	2/2W F
R131	1-216-480-11	METAL OXIDE	820	5%	3/2W F

EBR EBG

Ref.No.	Part No.	Description				Remark
R132	1-216-480-11	METAL OXIDE	820	5%	3W	F
R140	1-216-041-00	RES,CHIP	470	5%	1/10W	
R141	1-216-367-11	METAL OXIDE	0.68	5%	2W	F
R142	1-216-073-00	RES,CHIP	10K	5%	1/10W	
R143	1-216-081-00	RES,CHIP	22K	5%	1/10W	
R144	1-216-041-00	RES,CHIP	470	5%	1/10W	
R145	1-216-073-00	RES,CHIP	10K	5%	1/10W	
R146	1-216-367-11	METAL OXIDE	0.68	5%	2W	F
R150	1-216-669-11	METAL CHIP	5.6K	0.50%	1/10W	
R151	1-216-645-11	METAL CHIP	560	0.50%	1/10W	
R152	1-216-675-11	METAL CHIP	10K	0.50%	1/10W	
R153	1-216-677-11	METAL CHIP	12K	0.50%	1/10W	
R154	1-216-675-11	METAL CHIP	10K	0.50%	1/10W	
R156	1-249-389-11	CARBON	4.7	5%	1/4W	F
R157	1-249-389-11	CARBON	4.7	5%	1/4W	F
R158	1-216-675-11	METAL CHIP	10K	0.50%	1/10W	
R159	1-216-651-11	METAL CHIP	1K	0.50%	1/10W	
R160	1-216-651-11	METAL CHIP	1K	0.50%	1/10W	
R161	1-216-675-11	METAL CHIP	10K	0.50%	1/10W	
R162	1-249-389-11	CARBON	4.7	5%	1/4W	
R163	1-249-380-11	CARBON	0.82	5%	1/4W	F
R164	1-215-915-11	METAL OXIDE	470	5%	3W	F
R165	1-216-379-11	METAL OXIDE	6.8	5%	2W	F
R400	1-216-073-00	RES,CHIP	10K	5%	1/10W	
R401	1-216-077-00	RES,CHIP	15K	5%	1/10W	
R402	1-216-077-00	RES,CHIP	15K	5%	1/10W	
R403	1-216-085-00	RES,CHIP	33K	5%	1/10W	
R404	1-216-073-00	RES,CHIP	10K	5%	1/10W	
R405	1-216-049-91	RES,CHIP	1K	5%	1/10W	
R406	1-216-025-91	RES,CHIP	100	5%	1/10W	
R420	1-216-691-11	METAL CHIP	47K	0.50%	1/10W	
R421	1-216-679-11	METAL CHIP	15K	0.50%	1/10W	
R422	1-216-691-11	METAL CHIP	47K	0.50%	1/10W	
R423	1-216-675-11	METAL CHIP	10K	0.50%	1/10W	
R424	1-216-699-11	METAL CHIP	100K	0.50%	1/10W	
R425	1-216-049-91	RES,CHIP	1K	5%	1/10W	
R426	1-216-065-91	RES,CHIP	4.7K	5%	1/10W	
R427	1-216-041-00	RES,CHIP	470	5%	1/10W	
R428	1-216-041-00	RES,CHIP	470	5%	1/10W	
R429	1-216-041-00	RES,CHIP	470	5%	1/10W	
R430	1-216-041-00	RES,CHIP	470	5%	1/10W	
R431	1-216-679-11	METAL CHIP	15K	0.50%	1/10W	
R432	1-216-691-11	METAL CHIP	47K	0.50%	1/10W	
R433	1-216-687-11	METAL CHIP	33K	0.50%	1/10W	
R435	1-216-691-11	METAL CHIP	47K	0.50%	1/10W	
R436	1-216-017-91	RES,CHIP	47	5%	1/10W	
R437	1-249-414-11	CARBON	560	5%	1/4W	
R438	1-216-017-91	RES,CHIP	47	5%	1/10W	
R439	1-216-047-91	RES,CHIP	820	5%	1/10W	
R440	1-216-017-91	RES,CHIP	47	5%	1/10W	
R441	1-216-001-00	RES,CHIP	10	5%	1/10W	
R442	1-216-001-00	RES,CHIP	10	5%	1/10W	
R443	1-249-414-11	CARBON	560	5%	1/4W	
R444	1-216-017-91	RES,CHIP	47	5%	1/10W	
R445	1-216-017-91	RES,CHIP	47	5%	1/10W	
R446	1-216-047-91	RES,CHIP	820	5%	1/10W	
R447	1-216-017-91	RES,CHIP	47	5%	1/10W	
R448	1-216-001-00	RES,CHIP	10	5%	1/10W	
R449	1-216-001-00	RES,CHIP	10	5%	1/10W	

Ref.No.	Part No.	Description			Remark
R450	1-216-065-91	RES,CHIP	4.7K	5%	1/10W
R451	1-216-065-91	RES,CHIP	4.7K	5%	1/10W
R500	1-216-669-11	METAL CHIP	5.6K	0.50%	1/10W
R501	1-216-677-11	METAL CHIP	12K	0.50%	1/10W
R502	1-216-653-11	METAL CHIP	1.2K	0.50%	1/10W
R503	1-216-651-11	METAL CHIP	1K	0.50%	1/10W
R504	1-216-671-11	METAL CHIP	6.8K	0.50%	1/10W
R505	1-216-665-11	METAL CHIP	3.9K	0.50%	1/10W
R506	1-216-675-11	METAL CHIP	10K	0.50%	1/10W
R507	1-216-651-11	METAL CHIP	1K	0.50%	1/10W
R508	1-216-643-11	METAL CHIP	470	0.50%	1/10W
R509	1-216-651-11	METAL CHIP	1K	0.50%	1/10W
R510	1-216-667-11	METAL CHIP	4.7K	0.50%	1/10W
R511	1-216-673-11	METAL CHIP	8.2K	0.50%	1/10W
R512	1-216-641-11	METAL CHIP	390	0.50%	1/10W
R513	1-216-687-11	METAL CHIP	33K	0.50%	1/10W
R514	1-216-651-11	METAL CHIP	1K	0.50%	1/10W
R515	1-216-651-11	METAL CHIP	1K	0.50%	1/10W
R516	1-216-641-11	METAL CHIP	390	0.50%	1/10W
R517	1-216-673-11	METAL CHIP	8.2K	0.50%	1/10W
R518	1-216-693-11	METAL CHIP	56K	0.50%	1/10W

****

	* A-1346-780-A	EBG COMPLETE PC BOARD (Include EBA, EBC Mounted PC BOARD) **********
	3-701-809-31	SCREW, TERMINAL (M3X8)
	* 4-067-812-01	HOLDER (C), TR
	4-382-854-11	SCREW (M3X10), P, SW (+)
	4-382-854-11	SCREW (M3X10), P, SW (+)

<CAPACITOR>

Ref.No.	Part No.	Description			
C200	1-107-921-91	ELECT	100μF	20%	63V
C201	1-107-921-91	ELECT	100μF	20%	63V
C208	1-107-369-11	MYLAR	0.068μF	10%	100V
C209	1-107-369-11	MYLAR	0.068μF	10%	100V
C210	1-107-923-11	ELECT	330μF	20%	63V
C211	1-107-923-11	ELECT	330μF	20%	63V
C212	1-107-914-11	ELECT	1000μF	20%	25V
C213	1-107-914-11	ELECT	1000μF	20%	25V
C214	1-136-481-11	MYLAR	0.0022μF	10%	100V
C215	1-137-150-11	MYLAR	0.01μF	10%	100V
C218	1-163-001-11	CERAMIC CHIP	220PF	10%	50V
C221	1-107-906-11	ELECT	10μF	20%	50V
C222	1-107-504-11	CERAMIC	10PF	0.5PF	500V
C223	1-115-339-11	CERAMIC CHIP	0.1μF	10%	50V
C240	1-128-526-11	ELECT	100μF	20%	25V
C241	1-107-906-11	ELECT	10μF	20%	50V
C242	1-128-526-11	ELECT	100μF	20%	25V
C243	1-107-906-11	ELECT	10μF	20%	50V
C250	1-128-526-11	ELECT	100μF	20%	25V
C251	1-163-021-91	CERAMIC CHIP	0.01μF	10%	50V
C252	1-104-653-11	ELECT	220μF	20%	16V
C253	1-128-526-11	ELECT	100μF	20%	25V
C254	1-163-021-91	CERAMIC CHIP	0.01μF	10%	50V
C255	1-104-653-11	ELECT	220μF	20%	16V

Ref.No.	Part No.	Description			Remark
C256	1-163-251-11	CERAMIC CHIP 100PF		5%	50V
C257	1-163-021-91	CERAMIC CHIP 0.01μF		10%	50V
C258	1-163-021-91	CERAMIC CHIP 0.01μF		10%	50V
C259	1-107-909-11	ELECT	47μF	20%	50V
C260	1-107-909-11	ELECT	47μF	20%	50V
C261	1-163-021-91	CERAMIC CHIP 0.01μF		10%	50V
C262	1-163-021-91	CERAMIC CHIP 0.01μF		10%	50V
C263	1-136-169-00	FILM	0.22μF	5%	50V
C400	1-124-242-00	ELECT	33μF	20%	25V
C420	1-163-031-11	CERAMIC CHIP 0.01μF			50V
C421	1-163-031-11	CERAMIC CHIP 0.01μF			50V
C422	1-163-031-11	CERAMIC CHIP 0.01μF			50V
C500	1-124-242-00	ELECT	33μF	20%	25V
C501	1-124-242-00	ELECT	33μF	20%	25V
C502	1-163-031-11	CERAMIC CHIP 0.01μF			50V
C503	1-163-031-11	CERAMIC CHIP 0.01μF			50V
C504	1-163-031-11	CERAMIC CHIP 0.01μF			50V
C505	1-163-227-11	CERAMIC CHIP 10PF		0.5PF	50V
C506	1-163-251-11	CERAMIC CHIP 100PF		5%	50V
C507	1-124-242-00	ELECT	33μF	20%	25V
C508	1-124-242-00	ELECT	33μF	20%	25V
C509	1-163-031-11	CERAMIC CHIP 0.01μF			50V
C510	1-163-031-11	CERAMIC CHIP 0.01μF			50V
C511	1-163-031-11	CERAMIC CHIP 0.01μF			50V
	<CONNECTOR>				
CN150	* 1-564-709-11	PIN, CONNECTOR (SMALL TYPE) 7P			
CN151	* 1-564-713-11	PIN, CONNECTOR (SMALL TYPE)11P			
CN152	* 1-564-713-11	PIN, CONNECTOR (SMALL TYPE)11P			
CN153	* 1-785-518-11	CONNECTOR, BOARD TO BOARD 15P			
CN154	* 1-774-249-11	CONNECTOR, BOARD TO BOARD 10P			
CN155	* 1-564-507-11	PLUG, CONNECTOR 4P			
CN168	* 1-785-517-11	CONNECTOR, BOARD TO BOARD 13P			
CN500	* 1-774-246-11	CONNECTOR, BOARD TO BOARD 10P			
	<DIODE>				
D200	8-719-106-89	DIODE RD15M-T1B2			
D201	8-719-106-89	DIODE RD15M-T1B2			
D202	8-719-025-10	DIODE D8LC20U			
D203	8-719-025-11	DIODE D8LC20UR			
D204	8-719-106-71	DIODE RD12M-B2			
D205	8-719-801-78	DIODE 1SS184			
D240	8-719-801-78	DIODE 1SS184			
D241	8-719-801-78	DIODE 1SS184			
D250	8-719-801-78	DIODE 1SS184			
D251	8-719-801-78	DIODE 1SS184			
D400	8-719-801-78	DIODE 1SS184			
D420	8-719-801-78	DIODE 1SS184			
D421	8-719-106-53	DIODE RD10M-B2			
	<FERRITE BEAD>				
FB200	1-410-396-41	FERRITE 0.45μH			
FB201	1-410-396-41	FERRITE 0.45μH			
FB202	1-410-396-41	FERRITE 0.45μH			
FB203	1-410-396-41	FERRITE 0.45μH			
FB204	1-410-396-41	FERRITE 0.45μH			

Ref.No.	Part No.	Description			Remark
FB205	1-410-396-41	FERRITE 0.45μH			
	<IC>				
IC250	8-759-231-58	IC TA7812S			
IC251	8-759-701-88	IC NJM7912FA			
IC252	8-759-100-96	IC UPC4558G2			
IC253	8-759-336-63	IC LM675T			
IC400	8-759-988-13	IC LM393PS			
IC420	8-759-105-49	IC UPC319G2			
IC500	8-759-381-53	IC UPC814G2-E2			
IC501	8-759-984-88	IC LM6361M			
	<COIL>				
L200	1-406-663-21	INDUCTOR 47μH			
L201	1-406-663-21	INDUCTOR 47μH			
L202	1-412-533-21	INDUCTOR 47μH			
L203	1-412-533-21	INDUCTOR 47μH			
L250	1-410-645-31	INDUCTOR 100μH			
L251	1-410-645-31	INDUCTOR 100μH			
L252	1-412-533-21	INDUCTOR 47μH			
L253	1-412-533-21	INDUCTOR 47μH			
L500	1-410-645-31	INDUCTOR 100μH			
L501	1-410-645-31	INDUCTOR 100μH			
	<TRANSISTOR>				
Q202	8-729-142-68	TRANSISTOR 2SJ143			
Q203	8-729-142-69	TRANSISTOR 2SK817			
Q204	8-729-207-89	TRANSISTOR 2SA1358-Y			
Q205	8-729-207-82	TRANSISTOR 2SC3421-Y			
Q206	8-729-021-76	TRANSISTOR 2SA1804-RO			
Q207	8-729-021-75	TRANSISTOR 2SC4689N-RO			
Q240	8-729-216-22	TRANSISTOR 2SA1162-G			
Q241	8-729-230-49	TRANSISTOR 2SC2712-YG			
Q400	1-801-806-11	TRANSISTOR DTC144EKA-T146			
Q420	8-729-230-49	TRANSISTOR 2SC2712-YG			
Q421	8-729-230-49	TRANSISTOR 2SC2712-YG			
Q422	8-729-230-49	TRANSISTOR 2SC2712-YG			
Q423	8-729-033-10	TRANSISTOR 2SC3776-CD-AA			
Q424	8-729-230-49	TRANSISTOR 2SC2712-YG			
Q425	8-729-216-22	TRANSISTOR 2SA1162-G			
Q426	8-729-033-10	TRANSISTOR 2SC3776-CD-AA			
Q427	8-729-230-49	TRANSISTOR 2SC2712-YG			
Q428	8-729-216-22	TRANSISTOR 2SA1162-G			
Q500	8-729-216-22	TRANSISTOR 2SA1162-G			
Q501	8-729-216-22	TRANSISTOR 2SA1162-G			
Q502	8-729-230-49	TRANSISTOR 2SC2712-YG			
Q503	8-729-230-49	TRANSISTOR 2SC2712-YG			
	<RESISTOR>				
R210	1-216-073-00	RES,CHIP	10K	5%	1/10W
R211	1-216-073-00	RES,CHIP	10K	5%	1/10W
R212	1-216-005-00	RES,CHIP	15	5%	1/10W
R213	1-216-005-00	RES,CHIP	15	5%	1/10W
R216	1-216-067-00	RES,CHIP	5.6K	5%	1/10W
R217	1-216-045-00	RES,CHIP	680	5%	1/10W

Ref.No.	Part No.	Description			Remark
R218	1-216-025-91	RES,CHIP	100	5%	1/10W
R219	1-216-647-11	METAL CHIP	680	0.50%	1/10W
R220	1-215-875-11	METAL OXIDE	10K	5%	1W F
R221	1-216-623-11	METAL CHIP	68	0.50%	1/10W
R222	1-216-627-11	METAL CHIP	100	0.50%	1/10W
R223	1-249-393-11	CARBON	10	5%	1/4W
R224	1-249-393-11	CARBON	10	5%	1/4W
R225	1-216-345-11	METAL OXIDE	0.47	5%	1W F
R226	1-216-345-11	METAL OXIDE	0.47	5%	1W F
R227	1-216-480-11	METAL OXIDE	820	5%	3W F
R228	1-216-371-00	METAL OXIDE	1.5	5%	2W F
R229	1-216-480-11	METAL OXIDE	820	5%	3W F
R230	1-216-371-00	METAL OXIDE	1.5	5%	2W F
R231	1-216-480-11	METAL OXIDE	820	5%	3W F
R232	1-216-480-11	METAL OXIDE	820	5%	3W F
R240	1-216-041-00	RES,CHIP	470	5%	1/10W
R241	1-216-367-11	METAL OXIDE	0.68	5%	2W F
R242	1-216-073-00	RES,CHIP	10K	5%	1/10W
R243	1-216-081-00	RES,CHIP	22K	5%	1/10W
R244	1-216-041-00	RES,CHIP	470	5%	1/10W
R245	1-216-073-00	RES,CHIP	10K	5%	1/10W
R246	1-216-367-11	METAL OXIDE	0.68	5%	2W F
R250	1-216-669-11	METAL CHIP	5.6K	0.50%	1/10W
R251	1-216-645-11	METAL CHIP	560	0.50%	1/10W
R252	1-216-675-11	METAL CHIP	10K	0.50%	1/10W
R253	1-216-677-11	METAL CHIP	12K	0.50%	1/10W
R254	1-216-675-11	METAL CHIP	10K	0.50%	1/10W
R256	1-249-389-11	CARBON	4.7	5%	1/4W F
R257	1-249-389-11	CARBON	4.7	5%	1/4W F
R258	1-216-675-11	METAL CHIP	10K	0.50%	1/10W
R259	1-216-651-11	METAL CHIP	1K	0.50%	1/10W
R260	1-216-651-11	METAL CHIP	1K	0.50%	1/10W
R261	1-216-675-11	METAL CHIP	10K	0.50%	1/10W
R262	1-249-389-11	CARBON	4.7	5%	1/4W
R263	1-249-380-11	CARBON	0.82	5%	1/4W F
R264	1-215-915-11	METAL OXIDE	470	5%	3W F
R265	1-216-379-11	METAL OXIDE	6.8	5%	2W F
R400	1-216-073-00	RES,CHIP	10K	5%	1/10W
R401	1-216-077-00	RES,CHIP	15K	5%	1/10W
R402	1-216-077-00	RES,CHIP	15K	5%	1/10W
R403	1-216-085-00	RES,CHIP	33K	5%	1/10W
R404	1-216-073-00	RES,CHIP	10K	5%	1/10W
R405	1-216-049-91	RES,CHIP	1K	5%	1/10W
R406	1-216-025-91	RES,CHIP	100	5%	1/10W
R420	1-216-691-11	METAL CHIP	47K	0.50%	1/10W
R421	1-216-679-11	METAL CHIP	15K	0.50%	1/10W
R422	1-216-691-11	METAL CHIP	47K	0.50%	1/10W
R423	1-216-675-11	METAL CHIP	10K	0.50%	1/10W
R424	1-216-699-11	METAL CHIP	100K	0.50%	1/10W
R425	1-216-049-91	RES,CHIP	1K	5%	1/10W
R426	1-216-065-91	RES,CHIP	4.7K	5%	1/10W
R427	1-216-041-00	RES,CHIP	470	5%	1/10W
R428	1-216-041-00	RES,CHIP	470	5%	1/10W
R429	1-216-041-00	RES,CHIP	470	5%	1/10W
R430	1-216-041-00	RES,CHIP	470	5%	1/10W
R431	1-216-679-11	METAL CHIP	15K	0.50%	1/10W
R432	1-216-691-11	METAL CHIP	47K	0.50%	1/10W
R433	1-216-687-11	METAL CHIP	33K	0.50%	1/10W
R435	1-216-691-11	METAL CHIP	47K	0.50%	1/10W
R436	1-216-017-91	RES,CHIP	47	5%	1/10W
R437	1-249-414-11	CARBON	560	5%	1/4W
R438	1-216-017-91	RES,CHIP	47	5%	1/10W
R439	1-216-047-91	RES,CHIP	820	5%	1/10W
R440	1-216-017-91	RES,CHIP	47	5%	1/10W
R441	1-216-001-00	RES,CHIP	10	5%	1/10W
R442	1-216-001-00	RES,CHIP	10	5%	1/10W
R443	1-249-414-11	CARBON	560	5%	1/4W
R444	1-216-017-91	RES,CHIP	47	5%	1/10W
R445	1-216-017-91	RES,CHIP	47	5%	1/10W
R446	1-216-047-91	RES,CHIP	820	5%	1/10W
R447	1-216-017-91	RES,CHIP	47	5%	1/10W
R448	1-216-001-00	RES,CHIP	10	5%	1/10W
R449	1-216-001-00	RES,CHIP	10	5%	1/10W
R450	1-216-065-91	RES,CHIP	4.7K	5%	1/10W
R451	1-216-065-91	RES,CHIP	4.7K	5%	1/10W
R500	1-216-669-11	METAL CHIP	5.6K	0.50%	1/10W
R501	1-216-677-11	METAL CHIP	12K	0.50%	1/10W
R502	1-216-653-11	METAL CHIP	1.2K	0.50%	1/10W
R503	1-216-651-11	METAL CHIP	1K	0.50%	1/10W
R504	1-216-671-11	METAL CHIP	6.8K	0.50%	1/10W
R505	1-216-665-11	METAL CHIP	3.9K	0.50%	1/10W
R506	1-216-675-11	METAL CHIP	10K	0.50%	1/10W
R507	1-216-651-11	METAL CHIP	1K	0.50%	1/10W
R508	1-216-643-11	METAL CHIP	470	0.50%	1/10W
R509	1-216-651-11	METAL CHIP	1K	0.50%	1/10W
R510	1-216-667-11	METAL CHIP	4.7K	0.50%	1/10W
R511	1-216-673-11	METAL CHIP	8.2K	0.50%	1/10W
R512	1-216-641-11	METAL CHIP	390	0.50%	1/10W
R513	1-216-687-11	METAL CHIP	33K	0.50%	1/10W
R514	1-216-651-11	METAL CHIP	1K	0.50%	1/10W
R515	1-216-651-11	METAL CHIP	1K	0.50%	1/10W
R516	1-216-641-11	METAL CHIP	390	0.50%	1/10W
R517	1-216-673-11	METAL CHIP	8.2K	0.50%	1/10W
R518	1-216-693-11	METAL CHIP	56K	0.50%	1/10W

****

* A-1346-781-A EBB COMPLETE PC BOARD
(Include EBA, EBC Mounted PC BOARD)
****

3-701-809-31	SCREW, TERMINAL (M3X8)		
* 4-067-812-01	HOLDER (C), TR		
4-382-854-11	SCREW (M3X10), P, SW (+)		
4-382-854-11	SCREW (M3X10), P, SW (+)		

<CAPACITOR>

C300	1-107-921-91	ELECT	100μF	20%	63V
C301	1-107-921-91	ELECT	100μF	20%	63V
C308	1-107-369-11	MYLAR	0.068μF	10%	100V
C309	1-107-369-11	MYLAR	0.068μF	10%	100V
C310	1-107-923-11	ELECT	330μF	20%	63V
C311	1-107-923-11	ELECT	330μF	20%	63V
C312	1-107-914-11	ELECT	1000μF	20%	25V
C313	1-107-914-11	ELECT	1000μF	20%	25V
C314	1-136-481-11	MYLAR	0.0022μF	10%	100V
C315	1-137-150-11	MYLAR	0.01μF	10%	100V

Ref.No.	Part No.	Description	Remark
C318	1-163-001-11	CERAMIC CHIP 220PF 10% 50V	
C321	1-107-906-11	ELECT 10μF 20% 50V	
C322	1-107-504-11	CERAMIC 10PF 0.5PF 500V	
C323	1-115-339-11	CERAMIC CHIP 0.1μF 10% 50V	
C340	1-128-526-11	ELECT 100μF 20% 25V	
C341	1-107-906-11	ELECT 10μF 20% 50V	
C342	1-128-526-11	ELECT 100μF 20% 25V	
C343	1-107-906-11	ELECT 10μF 20% 50V	
C350	1-128-526-11	ELECT 100μF 20% 25V	
C351	1-163-021-91	CERAMIC CHIP 0.01μF 10% 50V	
C352	1-104-653-11	ELECT 220μF 20% 16V	
C353	1-128-526-11	ELECT 100μF 20% 25V	
C354	1-163-021-91	CERAMIC CHIP 0.01μF 10% 50V	
C355	1-104-653-11	ELECT 220μF 20% 16V	
C356	1-163-251-11	CERAMIC CHIP 100PF 5% 50V	
C357	1-163-021-91	CERAMIC CHIP 0.01μF 10% 50V	
C358	1-163-021-91	CERAMIC CHIP 0.01μF 10% 50V	
C359	1-107-909-11	ELECT 47μF 20% 50V	
C360	1-107-909-11	ELECT 47μF 20% 50V	
C361	1-163-021-91	CERAMIC CHIP 0.01μF 10% 50V	
C362	1-163-021-91	CERAMIC CHIP 0.01μF 10% 50V	
C363	1-136-169-00	FILM 0.22μF 5% 50V	
C400	1-124-242-00	ELECT 33μF 20% 25V	
C420	1-163-031-11	CERAMIC CHIP 0.01μF 50V	
C421	1-163-031-11	CERAMIC CHIP 0.01μF 50V	
C422	1-163-031-11	CERAMIC CHIP 0.01μF 50V	
C500	1-124-242-00	ELECT 33μF 20% 25V	
C501	1-124-242-00	ELECT 33μF 20% 25V	
C502	1-163-031-11	CERAMIC CHIP 0.01μF 50V	
C503	1-163-031-11	CERAMIC CHIP 0.01μF 50V	
C504	1-163-031-11	CERAMIC CHIP 0.01μF 50V	
C505	1-163-227-11	CERAMIC CHIP 10PF 0.5PF 50V	
C506	1-163-251-11	CERAMIC CHIP 100PF 5% 50V	
C507	1-124-242-00	ELECT 33μF 20% 25V	
C508	1-124-242-00	ELECT 33μF 20% 25V	
C509	1-163-031-11	CERAMIC CHIP 0.01μF 50V	
C510	1-163-031-11	CERAMIC CHIP 0.01μF 50V	
C511	1-163-031-11	CERAMIC CHIP 0.01μF 50V	
	<CONNECTOR>		
CN160	* 1-564-709-11	PIN, CONNECTOR (SMALL TYPE) 7P	
CN161	* 1-564-713-11	PIN, CONNECTOR (SMALL TYPE)11P	
CN162	* 1-564-713-11	PIN, CONNECTOR (SMALL TYPE)11P	
CN163	* 1-785-518-11	CONNECTOR, BOARD TO BOARD 15P	
CN164	* 1-774-249-11	CONNECTOR, BOARD TO BOARD 10P	
CN165	* 1-564-507-11	PLUG, CONNECTOR 4P	
CN168	* 1-785-517-11	CONNECTOR, BOARD TO BOARD 13P	
CN500	* 1-774-246-11	CONNECTOR, BOARD TO BOARD 10P	
	<DIODE>		
D300	8-719-106-89	DIODE RD15M-T1B2	
D301	8-719-106-89	DIODE RD15M-T1B2	
D302	8-719-025-10	DIODE D8LC20U	
D303	8-719-025-11	DIODE D8LC20UR	
D304	8-719-106-71	DIODE RD12M-B2	
D305	8-719-801-78	DIODE 1SS184	
D340	8-719-801-78	DIODE 1SS184	
D341	8-719-801-78	DIODE 1SS184	
D350	8-719-801-78	DIODE 1SS184	
D351	8-719-801-78	DIODE 1SS184	
D400	8-719-801-78	DIODE 1SS184	
D420	8-719-801-78	DIODE 1SS184	
D421	8-719-106-53	DIODE RD10M-B2	
	<FERRITE BEAD>		
FB300	1-410-396-41	FERRITE 0.45μH	
FB301	1-410-396-41	FERRITE 0.45μH	
FB302	1-410-396-41	FERRITE 0.45μH	
FB303	1-410-396-41	FERRITE 0.45μH	
FB304	1-410-396-41	FERRITE 0.45μH	
FB305	1-410-396-41	FERRITE 0.45μH	
	<IC>		
IC350	8-759-231-58	IC TA7812S	
IC351	8-759-701-88	IC NJM7912FA	
IC352	8-759-100-96	IC UPC4558G2	
IC353	8-759-336-63	IC LM675T	
IC400	8-759-988-13	IC LM393PS	
IC420	8-759-105-49	IC UPC319G2	
IC500	8-759-381-53	IC UPC814G2-E2	
IC501	8-759-984-88	IC LM6361M	
	<COIL>		
L300	1-406-663-21	INDUCTOR 47μH	
L301	1-406-663-21	INDUCTOR 47μH	
L302	1-412-533-21	INDUCTOR 47μH	
L303	1-412-533-21	INDUCTOR 47μH	
L350	1-410-645-31	INDUCTOR 100μH	
L351	1-410-645-31	INDUCTOR 100μH	
L352	1-412-533-21	INDUCTOR 47μH	
L353	1-412-533-21	INDUCTOR 47μH	
L500	1-410-645-31	INDUCTOR 100μH	
L501	1-410-645-31	INDUCTOR 100μH	
	<TRANSISTOR>		
Q302	8-729-142-68	TRANSISTOR 2SJ143	
Q303	8-729-142-69	TRANSISTOR 2SK817	
Q304	8-729-207-89	TRANSISTOR 2SA1358-Y	
Q305	8-729-207-82	TRANSISTOR 2SC3421-Y	
Q306	8-729-021-76	TRANSISTOR 2SA1804-RO	
Q307	8-729-021-75	TRANSISTOR 2SC4689N-RO	
Q340	8-729-216-22	TRANSISTOR 2SA1162-G	
Q341	8-729-230-49	TRANSISTOR 2SC2712-YG	
Q400	1-801-806-11	TRANSISTOR DTC144EKA-T146	
Q420	8-729-230-49	TRANSISTOR 2SC2712-YG	
Q421	8-729-230-49	TRANSISTOR 2SC2712-YG	
Q422	8-729-230-49	TRANSISTOR 2SC2712-YG	
Q423	8-729-033-10	TRANSISTOR 2SC3776-CD-AA	
Q424	8-729-230-49	TRANSISTOR 2SC2712-YG	
Q425	8-729-216-22	TRANSISTOR 2SA1162-G	
Q426	8-729-033-10	TRANSISTOR 2SC3776-CD-AA	
Q427	8-729-230-49	TRANSISTOR 2SC2712-YG	

EBB

Ref.No.	Part No.	Description				Remark
Q428	8-729-216-22	TRANSISTOR 2SA1162-G				
Q500	8-729-216-22	TRANSISTOR 2SA1162-G				
Q501	8-729-216-22	TRANSISTOR 2SA1162-G				
Q502	8-729-230-49	TRANSISTOR 2SC2712-YG				
Q503	8-729-230-49	TRANSISTOR 2SC2712-YG				
	<RESISTOR>					
R310	1-216-073-00	RES,CHIP	10K	5%	1/10W	
R311	1-216-073-00	RES,CHIP	10K	5%	1/10W	
R312	1-216-005-00	RES,CHIP	15	5%	1/10W	
R313	1-216-005-00	RES,CHIP	15	5%	1/10W	
R316	1-216-067-00	RES,CHIP	5.6K	5%	1/10W	
R317	1-216-045-00	RES,CHIP	680	5%	1/10W	
R318	1-216-025-91	RES,CHIP	100	5%	1/10W	
R319	1-216-647-11	METAL CHIP	680	0.50%	1/10W	
R320	1-215-875-11	METAL OXIDE	10K	5%	1W	F
R321	1-216-623-11	METAL CHIP	68	0.50%	1/10W	
R322	1-216-627-11	METAL CHIP	100	0.50%	1/10W	
R323	1-249-393-11	CARBON	10	5%	1/4W	
R324	1-249-393-11	CARBON	10	5%	1/4W	
R325	1-216-345-11	METAL OXIDE	0.47	5%	1W	F
R326	1-216-345-11	METAL OXIDE	0.47	5%	1W	F
R327	1-216-480-11	METAL OXIDE	820	5%	3W	F
R328	1-216-371-00	METAL OXIDE	1.5	5%	2W	F
R329	1-216-480-11	METAL OXIDE	820	5%	3W	F
R330	1-216-371-00	METAL OXIDE	1.5	5%	2W	F
R331	1-216-480-11	METAL OXIDE	820	5%	3W	F
R332	1-216-480-11	METAL OXIDE	820	5%	3W	F
R340	1-216-041-00	RES,CHIP	470	5%	1/10W	
R341	1-216-367-11	METAL OXIDE	0.68	5%	2W	F
R342	1-216-073-00	RES,CHIP	10K	5%	1/10W	
R343	1-216-081-00	RES,CHIP	22K	5%	1/10W	
R344	1-216-041-00	RES,CHIP	470	5%	1/10W	
R345	1-216-073-00	RES,CHIP	10K	5%	1/10W	
R346	1-216-367-11	METAL OXIDE	0.68	5%	2W	F
R350	1-216-669-11	METAL CHIP	5.6K	0.50%	1/10W	
R351	1-216-645-11	METAL CHIP	560	0.50%	1/10W	
R352	1-216-675-11	METAL CHIP	10K	0.50%	1/10W	
R353	1-216-677-11	METAL CHIP	12K	0.50%	1/10W	
R354	1-216-675-11	METAL CHIP	10K	0.50%	1/10W	
R356	1-249-389-11	CARBON	4.7	5%	1/4W	F
R357	1-249-389-11	CARBON	4.7	5%	1/4W	F
R358	1-216-675-11	METAL CHIP	10K	0.50%	1/10W	
R359	1-216-651-11	METAL CHIP	1K	0.50%	1/10W	
R360	1-216-651-11	METAL CHIP	1K	0.50%	1/10W	
R361	1-216-675-11	METAL CHIP	10K	0.50%	1/10W	
R362	1-249-389-11	CARBON	4.7	5%	1/4W	
R363	1-249-380-11	CARBON	0.82	5%	1/4W	F
R364	1-215-915-11	METAL OXIDE	470	5%	3W	F
R365	1-216-379-11	METAL OXIDE	6.8	5%	2W	F
R400	1-216-073-00	RES,CHIP	10K	5%	1/10W	
R401	1-216-077-00	RES,CHIP	15K	5%	1/10W	
R402	1-216-077-00	RES,CHIP	15K	5%	1/10W	
R403	1-216-085-00	RES,CHIP	33K	5%	1/10W	
R404	1-216-073-00	RES,CHIP	10K	5%	1/10W	
R405	1-216-049-91	RES,CHIP	1K	5%	1/10W	
R406	1-216-025-91	RES,CHIP	100	5%	1/10W	

Ref.No.	Part No.	Description				Remark
R420	1-216-691-11	METAL CHIP	47K	0.50%	1/10W	
R421	1-216-679-11	METAL CHIP	15K	0.50%	1/10W	
R422	1-216-691-11	METAL CHIP	47K	0.50%	1/10W	
R423	1-216-675-11	METAL CHIP	10K	0.50%	1/10W	
R424	1-216-699-11	METAL CHIP	100K	0.50%	1/10W	
R425	1-216-049-91	RES,CHIP	1K	5%	1/10W	
R426	1-216-065-91	RES,CHIP	4.7K	5%	1/10W	
R427	1-216-041-00	RES,CHIP	470	5%	1/10W	
R428	1-216-041-00	RES,CHIP	470	5%	1/10W	
R429	1-216-041-00	RES,CHIP	470	5%	1/10W	
R430	1-216-041-00	RES,CHIP	470	5%	1/10W	
R431	1-216-679-11	METAL CHIP	15K	0.50%	1/10W	
R432	1-216-691-11	METAL CHIP	47K	0.50%	1/10W	
R433	1-216-687-11	METAL CHIP	33K	0.50%	1/10W	
R435	1-216-691-11	METAL CHIP	47K	0.50%	1/10W	
R436	1-216-017-91	RES,CHIP	47	5%	1/10W	
R437	1-249-414-11	CARBON	560	5%	1/4W	
R438	1-216-017-91	RES,CHIP	47	5%	1/10W	
R439	1-216-047-91	RES,CHIP	820	5%	1/10W	
R440	1-216-017-91	RES,CHIP	47	5%	1/10W	
R441	1-216-001-00	RES,CHIP	10	5%	1/10W	
R442	1-216-001-00	RES,CHIP	10	5%	1/10W	
R443	1-249-414-11	CARBON	560	5%	1/4W	
R444	1-216-017-91	RES,CHIP	47	5%	1/10W	
R445	1-216-017-91	RES,CHIP	47	5%	1/10W	
R446	1-216-047-91	RES,CHIP	820	5%	1/10W	
R447	1-216-017-91	RES,CHIP	47	5%	1/10W	
R448	1-216-001-00	RES,CHIP	10	5%	1/10W	
R449	1-216-001-00	RES,CHIP	10	5%	1/10W	
R450	1-216-065-91	RES,CHIP	4.7K	5%	1/10W	
R451	1-216-065-91	RES,CHIP	4.7K	5%	1/10W	
R500	1-216-669-11	METAL CHIP	5.6K	0.50%	1/10W	
R501	1-216-677-11	METAL CHIP	12K	0.50%	1/10W	
R502	1-216-653-11	METAL CHIP	1.2K	0.50%	1/10W	
R503	1-216-651-11	METAL CHIP	1K	0.50%	1/10W	
R504	1-216-671-11	METAL CHIP	6.8K	0.50%	1/10W	
R505	1-216-665-11	METAL CHIP	3.9K	0.50%	1/10W	
R506	1-216-675-11	METAL CHIP	10K	0.50%	1/10W	
R507	1-216-651-11	METAL CHIP	1K	0.50%	1/10W	
R508	1-216-643-11	METAL CHIP	470	0.50%	1/10W	
R509	1-216-651-11	METAL CHIP	1K	0.50%	1/10W	
R510	1-216-667-11	METAL CHIP	4.7K	0.50%	1/10W	
R511	1-216-673-11	METAL CHIP	8.2K	0.50%	1/10W	
R512	1-216-641-11	METAL CHIP	390	0.50%	1/10W	
R513	1-216-687-11	METAL CHIP	33K	0.50%	1/10W	
R514	1-216-651-11	METAL CHIP	1K	0.50%	1/10W	
R515	1-216-651-11	METAL CHIP	1K	0.50%	1/10W	
R516	1-216-641-11	METAL CHIP	390	0.50%	1/10W	
R517	1-216-673-11	METAL CHIP	8.2K	0.50%	1/10W	
R518	1-216-693-11	METAL CHIP	56K	0.50%	1/10W	

Ref.No.	Part No.	Description			Remark
**********					
	* A-1390-887-A	L MOUNTED PC BOARD **********			
	<CAPACITOR>				
C6	1-126-795-11	ELECT	10μF	20%	50V
C10	1-104-664-11	ELECT	47μF	20%	16V
	<CONNECTOR>				
CN83	* 1-785-517-11	CONNECTOR, BOARD TO BOARD 13P			
	<DIODE>				
D2	8-719-801-78	DIODE 1SS184			
	<IC>				
IC1	8-759-100-93	IC UPC393G2			
IC2	8-759-100-93	IC UPC393G2			
	<COIL>				
L2	1-412-533-21	INDUCTOR 47μH			
	<TRANSISTOR>				
Q1	1-801-806-11	TRANSISTOR DTC144EKA-T146			
Q2	1-801-806-11	TRANSISTOR DTC144EKA-T146			
	<RESISTOR>				
R1	1-216-101-00	RES,CHIP	150K	5%	1/10W
R2	1-216-101-00	RES,CHIP	150K	5%	1/10W
R3	1-216-099-00	RES,CHIP	120K	5%	1/10W
R4	1-216-073-00	RES,CHIP	10K	5%	1/10W
R5	1-216-073-00	RES,CHIP	10K	5%	1/10W
R8	1-216-099-00	RES,CHIP	120K	5%	1/10W
R9	1-216-081-00	RES,CHIP	22K	5%	1/10W
R10	1-216-083-00	RES,CHIP	27K	5%	1/10W
R11	1-216-099-00	RES,CHIP	120K	5%	1/10W
R13	1-216-073-00	RES,CHIP	10K	5%	1/10W
R15	1-216-083-00	RES,CHIP	27K	5%	1/10W
R18	1-216-077-00	RES,CHIP	15K	5%	1/10W
R19	1-216-077-00	RES,CHIP	15K	5%	1/10W
R21	1-216-049-91	RES,CHIP	1K	5%	1/10W
R23	1-216-049-91	RES,CHIP	1K	5%	1/10W
R30	1-216-025-91	RES,CHIP	100	5%	1/10W
R31	1-216-025-91	RES,CHIP	100	5%	1/10W
R32	1-216-101-00	RES,CHIP	150K	5%	1/10W
R33	1-216-097-91	RES,CHIP	100K	5%	1/10W
R35	1-216-101-00	RES,CHIP	150K	5%	1/10W
R37	1-216-049-91	RES,CHIP	1K	5%	1/10W
R38	1-216-097-91	RES,CHIP	100K	5%	1/10W
R39	1-216-077-00	RES,CHIP	15K	5%	1/10W
R42	1-216-101-00	RES,CHIP	150K	5%	1/10W
R43	1-216-049-91	RES,CHIP	1K	5%	1/10W
R44	1-216-025-91	RES,CHIP	100	5%	1/10W
R45	1-216-025-91	RES,CHIP	100	5%	1/10W
R60	1-216-077-00	RES,CHIP	15K	5%	1/10W
**********					
	* A-1390-888-A	NA MOUNTED PC BOARD **********			
	* 4-041-068-01	HOLDER, LED			
	<CAPACITOR>				
C300	1-124-589-11	ELECT	47μF	20%	16V
C301	1-163-243-11	CERAMIC CHIP	47PF	5%	50V
	<CONNECTOR>				
CN460	* 1-564-507-11	PLUG, CONNECTOR 4P			
	<DIODE>				
D300	8-719-920-66	DIODE SLR-54VC12			
D301	8-719-955-04	DIODE PY5504S-1			
	<IC>				
	<TRANSISTOR>				
Q300	8-729-230-49	TRANSISTOR 2SC2712-YG			
	<RESISTOR>				
R300	1-216-033-00	RES,CHIP	220	5%	1/10W
R301	1-216-081-00	RES,CHIP	22K	5%	1/10W
R302	1-216-025-91	RES,CHIP	100	5%	1/10W
R303	1-216-025-91	RES,CHIP	100	5%	1/10W
R304	1-216-073-00	RES,CHIP	10K	5%	1/10W
**********					
	* A-1390-889-A	NB MOUNTED PC BOARD **********			
	* 4-374-987-01	GUIDE, LIGHT			
	* 4-381-686-01	BRACKET (B), BAR, OPTICAL			
	<CAPACITOR>				
C400	1-163-243-11	CERAMIC CHIP	47PF	5%	50V
C401	1-124-589-11	ELECT	47μF	20%	16V
	<CONNECTOR>				
CN470	* 1-564-518-11	PLUG, CONNECTOR 3P			

NB YA

Ref.No.	Part No.	Description		Remark
	<IC>			
IC400	8-742-061-10	HYB IC SBX1820-59		
**********				
	* A-1394-911-A	YA COMPLETE PC BOARD (Include YB Mounted PC BOARD) **********		
	* 1-526-660-21	SOCKET, IC (DP) 32P		
	* 1-526-662-21	SOCKET, IC (DP) 40P		
	1-540-151-21	SOCKET, IC		
	* 1-540-212-11	SOCKET (ROTARY SWITCH)		
	* 7-322-065-72	RUBBER, RTV (SE-9168) (130G)		
	<CAPACITOR>			
C11	1-163-251-11	CERAMIC CHIP 100PF	5%	50V
C12	1-163-251-11	CERAMIC CHIP 100PF	5%	50V
C13	1-163-251-11	CERAMIC CHIP 100PF	5%	50V
C14	1-163-251-11	CERAMIC CHIP 100PF	5%	50V
C15	1-163-251-11	CERAMIC CHIP 100PF	5%	50V
C16	1-163-251-11	CERAMIC CHIP 100PF	5%	50V
C17	1-165-319-11	CERAMIC CHIP 0.1μF		50V
C18	1-165-319-11	CERAMIC CHIP 0.1μF		50V
C19	1-165-319-11	CERAMIC CHIP 0.1μF		50V
C20	1-163-251-11	CERAMIC CHIP 100PF	5%	50V
C151	1-165-319-11	CERAMIC CHIP 0.1μF		50V
C152	1-165-319-11	CERAMIC CHIP 0.1μF		50V
C153	1-165-319-11	CERAMIC CHIP 0.1μF		50V
C154	1-165-319-11	CERAMIC CHIP 0.1μF		50V
C155	1-165-319-11	CERAMIC CHIP 0.1μF		50V
C156	1-165-319-11	CERAMIC CHIP 0.1μF		50V
C157	1-163-251-11	CERAMIC CHIP 100PF	5%	50V
C160	1-165-319-11	CERAMIC CHIP 0.1μF		50V
C171	1-128-004-11	ELECT CHIP 10μF	20%	16V
C172	1-165-319-11	CERAMIC CHIP 0.1μF		50V
C173	1-165-319-11	CERAMIC CHIP 0.1μF		50V
C174	1-128-393-11	ELECT CHIP 100μF	20%	10V
C175	1-128-004-11	ELECT CHIP 10μF	20%	16V
C176	1-165-319-11	CERAMIC CHIP 0.1μF		50V
C177	1-165-319-11	CERAMIC CHIP 0.1μF		50V
C178	1-128-393-11	ELECT CHIP 100μF	20%	10V
C179	1-128-004-11	ELECT CHIP 10μF	20%	16V
C180	1-165-319-11	CERAMIC CHIP 0.1μF		50V
C181	1-165-319-11	CERAMIC CHIP 0.1μF		50V
C182	1-128-393-11	ELECT CHIP 100μF	20%	10V
C183	1-128-004-11	ELECT CHIP 10μF	20%	16V
C184	1-165-319-11	CERAMIC CHIP 0.1μF		50V
C185	1-165-319-11	CERAMIC CHIP 0.1μF		50V
C186	1-128-393-11	ELECT CHIP 100μF	20%	10V
C187	1-128-004-11	ELECT CHIP 10μF	20%	16V
C188	1-165-319-11	CERAMIC CHIP 0.1μF		50V
C189	1-165-319-11	CERAMIC CHIP 0.1μF		50V
C190	1-128-393-11	ELECT CHIP 100μF	20%	10V
C191	1-128-004-11	ELECT CHIP 10μF	20%	16V
C192	1-165-319-11	CERAMIC CHIP 0.1μF		50V
C193	1-165-319-11	CERAMIC CHIP 0.1μF		50V
C194	1-128-393-11	ELECT CHIP 100μF	20%	10V
C201	1-163-233-11	CERAMIC CHIP 18PF	5%	50V
C202	1-163-233-11	CERAMIC CHIP 18PF	5%	50V
C203	1-165-319-11	CERAMIC CHIP 0.1μF		50V
C205	1-163-133-00	CERAMIC CHIP 470PF	5%	50V
C206	1-165-319-11	CERAMIC CHIP 0.1μF		50V
C207	1-165-319-11	CERAMIC CHIP 0.1μF		50V
C208	1-165-319-11	CERAMIC CHIP 0.1μF		50V
C209	1-165-319-11	CERAMIC CHIP 0.1μF		50V
C210	1-165-319-11	CERAMIC CHIP 0.1μF		50V
C211	1-165-319-11	CERAMIC CHIP 0.1μF		50V
C212	1-165-319-11	CERAMIC CHIP 0.1μF		50V
C213	1-165-319-11	CERAMIC CHIP 0.1μF		50V
C214	1-165-319-11	CERAMIC CHIP 0.1μF		50V
C215	1-165-319-11	CERAMIC CHIP 0.1μF		50V
C216	1-165-319-11	CERAMIC CHIP 0.1μF		50V
C231	1-165-319-11	CERAMIC CHIP 0.1μF		50V
C233	1-165-319-11	CERAMIC CHIP 0.1μF		50V
C234	1-165-319-11	CERAMIC CHIP 0.1μF		50V
C235	1-165-319-11	CERAMIC CHIP 0.1μF		50V
C236	1-165-319-11	CERAMIC CHIP 0.1μF		50V
C237	1-165-319-11	CERAMIC CHIP 0.1μF		50V
C238	1-165-319-11	CERAMIC CHIP 0.1μF		50V
C239	1-165-319-11	CERAMIC CHIP 0.1μF		50V
C240	1-165-319-11	CERAMIC CHIP 0.1μF		50V
C241	1-165-319-11	CERAMIC CHIP 0.1μF		50V
C242	1-165-319-11	CERAMIC CHIP 0.1μF		50V
C251	1-165-319-11	CERAMIC CHIP 0.1μF		50V
C252	1-165-319-11	CERAMIC CHIP 0.1μF		50V
C253	1-165-319-11	CERAMIC CHIP 0.1μF		50V
C254	1-165-319-11	CERAMIC CHIP 0.1μF		50V
C255	1-165-319-11	CERAMIC CHIP 0.1μF		50V
C256	1-165-319-11	CERAMIC CHIP 0.1μF		50V
C257	1-165-319-11	CERAMIC CHIP 0.1μF		50V
C258	1-165-319-11	CERAMIC CHIP 0.1μF		50V
C259	1-165-319-11	CERAMIC CHIP 0.1μF		50V
C260	1-165-319-11	CERAMIC CHIP 0.1μF		50V
C261	1-165-319-11	CERAMIC CHIP 0.1μF		50V
C262	1-165-319-11	CERAMIC CHIP 0.1μF		50V
C302	1-165-319-11	CERAMIC CHIP 0.1μF		50V
C303	1-165-319-11	CERAMIC CHIP 0.1μF		50V
C304	1-165-319-11	CERAMIC CHIP 0.1μF		50V
C305	1-165-319-11	CERAMIC CHIP 0.1μF		50V
C311	1-165-319-11	CERAMIC CHIP 0.1μF		50V
C313	1-163-231-11	CERAMIC CHIP 15PF	5%	50V
C314	1-163-231-11	CERAMIC CHIP 15PF	5%	50V
C315	1-165-319-11	CERAMIC CHIP 0.1μF		50V
C321	1-165-319-11	CERAMIC CHIP 0.1μF		50V
C322	1-165-319-11	CERAMIC CHIP 0.1μF		50V
C323	1-165-319-11	CERAMIC CHIP 0.1μF		50V
C332	1-165-319-11	CERAMIC CHIP 0.1μF		50V
C333	1-165-319-11	CERAMIC CHIP 0.1μF		50V
C334	1-165-319-11	CERAMIC CHIP 0.1μF		50V
C421	1-165-319-11	CERAMIC CHIP 0.1μF		50V
C422	1-165-319-11	CERAMIC CHIP 0.1μF		50V
C431	1-165-319-11	CERAMIC CHIP 0.1μF		50V
C432	1-165-319-11	CERAMIC CHIP 0.1μF		50V
C433	1-165-319-11	CERAMIC CHIP 0.1μF		50V
C434	1-165-319-11	CERAMIC CHIP 0.1μF		50V

Ref.No.	Part No.	Description			Remark
C435	1-165-319-11	CERAMIC CHIP 0.1μF			50V
C436	1-165-319-11	CERAMIC CHIP 0.1μF			50V
C441	1-165-319-11	CERAMIC CHIP 0.1μF			50V
C442	1-163-231-11	CERAMIC CHIP 15PF		5%	50V
C443	1-163-231-11	CERAMIC CHIP 15PF		5%	50V
C444	1-165-319-11	CERAMIC CHIP 0.1μF			50V
C445	1-165-319-11	CERAMIC CHIP 0.1μF			50V
C453	1-165-319-11	CERAMIC CHIP 0.1μF			50V
C454	1-165-319-11	CERAMIC CHIP 0.1μF			50V
C455	1-165-319-11	CERAMIC CHIP 0.1μF			50V
C456	1-165-319-11	CERAMIC CHIP 0.1μF			50V
C457	1-163-231-11	CERAMIC CHIP 15PF		5%	50V
C458	1-163-231-11	CERAMIC CHIP 15PF		5%	50V
C459	1-165-319-11	CERAMIC CHIP 0.1μF			50V
C460	1-128-004-11	ELECT CHIP	10μF	20%	16V
C461	1-165-319-11	CERAMIC CHIP 0.1μF			50V
C462	1-163-127-00	CERAMIC CHIP 270PF		5%	50V
C463	1-163-275-11	CERAMIC CHIP 0.001μF		5%	50V
C464	1-165-319-11	CERAMIC CHIP 0.1μF			50V
C468	1-165-319-11	CERAMIC CHIP 0.1μF			50V
C501	1-126-204-11	ELECT CHIP	47μF	20%	16V
C502	1-165-319-11	CERAMIC CHIP 0.1μF			50V
C503	1-165-319-11	CERAMIC CHIP 0.1μF			50V
C505	1-165-319-11	CERAMIC CHIP 0.1μF			50V
C506	1-165-319-11	CERAMIC CHIP 0.1μF			50V
C507	1-165-319-11	CERAMIC CHIP 0.1μF			50V
C508	1-165-319-11	CERAMIC CHIP 0.1μF			50V
C509	1-165-319-11	CERAMIC CHIP 0.1μF			50V
C510	1-165-319-11	CERAMIC CHIP 0.1μF			50V
C511	1-126-204-11	ELECT CHIP	47μF	20%	16V
C512	1-165-319-11	CERAMIC CHIP 0.1μF			50V
C520	1-163-243-11	CERAMIC CHIP 47PF		5%	50V
C521	1-163-243-11	CERAMIC CHIP 47PF		5%	50V
C522	1-163-243-11	CERAMIC CHIP 47PF		5%	50V
C523	1-163-243-11	CERAMIC CHIP 47PF		5%	50V
C525	1-165-319-11	CERAMIC CHIP 0.1μF			50V
C526	1-163-231-11	CERAMIC CHIP 15PF		5%	50V
C527	1-163-231-11	CERAMIC CHIP 15PF		5%	50V
C532	1-165-319-11	CERAMIC CHIP 0.1μF			50V
C533	1-165-319-11	CERAMIC CHIP 0.1μF			50V
C534	1-165-319-11	CERAMIC CHIP 0.1μF			50V
C535	1-165-319-11	CERAMIC CHIP 0.1μF			50V
C541	1-165-319-11	CERAMIC CHIP 0.1μF			50V
C542	1-165-319-11	CERAMIC CHIP 0.1μF			50V
C551	1-128-393-11	ELECT CHIP	100μF	20%	10V
C552	1-165-319-11	CERAMIC CHIP 0.1μF			50V
C553	1-165-319-11	CERAMIC CHIP 0.1μF			50V
C554	1-128-393-11	ELECT CHIP	100μF	20%	10V
C555	1-128-013-11	ELECT CHIP	1μF	20%	50V
C556	1-163-037-11	CERAMIC CHIP 0.022μF		10%	50V
C557	1-165-319-11	CERAMIC CHIP 0.1μF			50V
C558	1-126-204-11	ELECT CHIP	47μF	20%	16V
C571	1-165-319-11	CERAMIC CHIP 0.1μF			50V
C573	1-165-319-11	CERAMIC CHIP 0.1μF			50V
C574	1-165-319-11	CERAMIC CHIP 0.1μF			50V
C575	1-128-013-11	ELECT CHIP	1μF	20%	50V
C576	1-128-013-11	ELECT CHIP	1μF	20%	50V
C577	1-165-319-11	CERAMIC CHIP 0.1μF			50V
C578	1-126-204-11	ELECT CHIP	47μF	20%	16V
C579	1-165-319-11	CERAMIC CHIP 0.1μF			50V
C582	1-165-319-11	CERAMIC CHIP 0.1μF			50V
C583	1-165-319-11	CERAMIC CHIP 0.1μF			50V
C584	1-163-121-00	CERAMIC CHIP 150PF		5%	50V
C585	1-163-021-91	CERAMIC CHIP 0.01μF		10%	50V
C590	1-165-319-11	CERAMIC CHIP 0.1μF			50V
C591	1-165-319-11	CERAMIC CHIP 0.1μF			50V
C592	1-165-319-11	CERAMIC CHIP 0.1μF			50V
C593	1-165-319-11	CERAMIC CHIP 0.1μF			50V
C595	1-165-319-11	CERAMIC CHIP 0.1μF			50V
C596	1-165-319-11	CERAMIC CHIP 0.1μF			50V
C597	1-165-319-11	CERAMIC CHIP 0.1μF			50V
C598	1-165-319-11	CERAMIC CHIP 0.1μF			50V
C601	1-165-319-11	CERAMIC CHIP 0.1μF			50V
C602	1-126-204-11	ELECT CHIP	47μF	20%	16V
C603	1-163-249-11	CERAMIC CHIP 82PF		5%	50V
C604	1-165-319-11	CERAMIC CHIP 0.1μF			50V
C605	1-163-020-00	CERAMIC CHIP 0.0082μF		10%	50V
C606	1-165-319-11	CERAMIC CHIP 0.1μF			50V
C607	1-165-319-11	CERAMIC CHIP 0.1μF			50V
C608	1-165-319-11	CERAMIC CHIP 0.1μF			50V
C609	1-165-319-11	CERAMIC CHIP 0.1μF			50V
C610	1-165-319-11	CERAMIC CHIP 0.1μF			50V
C611	1-165-319-11	CERAMIC CHIP 0.1μF			50V
C612	1-165-319-11	CERAMIC CHIP 0.1μF			50V
C613	1-165-319-11	CERAMIC CHIP 0.1μF			50V
C614	1-128-013-11	ELECT CHIP	1μF	20%	50V
C615	1-165-319-11	CERAMIC CHIP 0.1μF			50V
C701	1-165-319-11	CERAMIC CHIP 0.1μF			50V
C702	1-163-021-91	CERAMIC CHIP 0.01μF		10%	50V
C703	1-164-005-11	CERAMIC CHIP 0.47μF			25V
C704	1-165-319-11	CERAMIC CHIP 0.1μF			50V
C705	1-165-319-11	CERAMIC CHIP 0.1μF			50V
C706	1-165-319-11	CERAMIC CHIP 0.1μF			50V
C731	1-165-319-11	CERAMIC CHIP 0.1μF			50V
C732	1-126-204-11	ELECT CHIP	47μF	20%	16V
C733	1-128-393-11	ELECT CHIP	100μF	20%	10V
C734	1-165-319-11	CERAMIC CHIP 0.1μF			50V
C801	1-165-319-11	CERAMIC CHIP 0.1μF			50V
C802	1-165-319-11	CERAMIC CHIP 0.1μF			50V
C803	1-165-319-11	CERAMIC CHIP 0.1μF			50V
C804	1-165-319-11	CERAMIC CHIP 0.1μF			50V
C805	1-165-319-11	CERAMIC CHIP 0.1μF			50V
C806	1-165-319-11	CERAMIC CHIP 0.1μF			50V
C807	1-165-319-11	CERAMIC CHIP 0.1μF			50V
C808	1-165-319-11	CERAMIC CHIP 0.1μF			50V
C809	1-165-319-11	CERAMIC CHIP 0.1μF			50V
C810	1-165-319-11	CERAMIC CHIP 0.1μF			50V
C811	1-165-319-11	CERAMIC CHIP 0.1μF			50V
C812	1-165-319-11	CERAMIC CHIP 0.1μF			50V
C813	1-165-319-11	CERAMIC CHIP 0.1μF			50V
C814	1-165-319-11	CERAMIC CHIP 0.1μF			50V
C815	1-165-319-11	CERAMIC CHIP 0.1μF			50V
C816	1-165-319-11	CERAMIC CHIP 0.1μF			50V
C817	1-165-319-11	CERAMIC CHIP 0.1μF			50V
C818	1-165-319-11	CERAMIC CHIP 0.1μF			50V
C819	1-165-319-11	CERAMIC CHIP 0.1μF			50V
C820	1-165-319-11	CERAMIC CHIP 0.1μF			50V

YA

Ref.No.	Part No.	Description	Remark
C821	1-165-319-11	CERAMIC CHIP 0.1µF	50V
C822	1-165-319-11	CERAMIC CHIP 0.1µF	50V
C823	1-165-319-11	CERAMIC CHIP 0.1µF	50V
C824	1-165-319-11	CERAMIC CHIP 0.1µF	50V
C825	1-165-319-11	CERAMIC CHIP 0.1µF	50V
C826	1-165-319-11	CERAMIC CHIP 0.1µF	50V
C827	1-165-319-11	CERAMIC CHIP 0.1µF	50V
C828	1-165-319-11	CERAMIC CHIP 0.1µF	50V
C829	1-165-319-11	CERAMIC CHIP 0.1µF	50V
C830	1-165-319-11	CERAMIC CHIP 0.1µF	50V
C841	1-128-004-11	ELECT CHIP 10µF 20%	16V
C842	1-165-319-11	CERAMIC CHIP 0.1µF	50V
C844	1-128-013-11	ELECT CHIP 1µF 20%	50V
C846	1-165-319-11	CERAMIC CHIP 0.1µF	50V
C861	1-165-319-11	CERAMIC CHIP 0.1µF	50V
C862	1-165-319-11	CERAMIC CHIP 0.1µF	50V
C863	1-165-319-11	CERAMIC CHIP 0.1µF	50V
C864	1-165-319-11	CERAMIC CHIP 0.1µF	50V
C901	1-165-319-11	CERAMIC CHIP 0.1µF	50V
C903	1-165-319-11	CERAMIC CHIP 0.1µF	50V
C904	1-165-319-11	CERAMIC CHIP 0.1µF	50V
C905	1-165-319-11	CERAMIC CHIP 0.1µF	50V
C921	1-165-319-11	CERAMIC CHIP 0.1µF	50V
C923	1-165-319-11	CERAMIC CHIP 0.1µF	50V
C924	1-163-231-11	CERAMIC CHIP 15PF 5%	50V
C925	1-163-231-11	CERAMIC CHIP 15PF 5%	50V
C941	1-165-319-11	CERAMIC CHIP 0.1µF	50V
C942	1-165-319-11	CERAMIC CHIP 0.1µF	50V
C943	1-165-319-11	CERAMIC CHIP 0.1µF	50V
C944	1-165-319-11	CERAMIC CHIP 0.1µF	50V
C945	1-165-319-11	CERAMIC CHIP 0.1µF	50V
C946	1-165-319-11	CERAMIC CHIP 0.1µF	50V
C961	1-165-319-11	CERAMIC CHIP 0.1µF	50V
C962	1-165-319-11	CERAMIC CHIP 0.1µF	50V
C983	1-165-319-11	CERAMIC CHIP 0.1µF	50V
C986	1-165-319-11	CERAMIC CHIP 0.1µF	50V
C990	1-126-935-11	ELECT 470µF 20%	6.3V
C991	1-126-935-11	ELECT 470µF 20%	6.3V
		<CONNECTOR>	
CN410	* 1-785-517-11	CONNECTOR, BOARD TO BOARD 13P	
CN420	* 1-778-891-11	CONNECTOR, BOARD TO BOARD	
CN421	* 1-778-891-11	CONNECTOR, BOARD TO BOARD	
CN902	* 1-785-518-11	CONNECTOR, BOARD TO BOARD 15P	
		<DIODE>	
D13	8-719-105-73	DIODE RD4.7M-B2	
D14	8-719-105-73	DIODE RD4.7M-B2	
D15	8-719-105-73	DIODE RD4.7M-B2	
D16	8-719-914-42	DIODE DA204K	
D17	8-719-914-42	DIODE DA204K	
D171	8-719-404-50	DIODE MA111-TX	
D172	8-719-404-50	DIODE MA111-TX	
D173	8-719-404-50	DIODE MA111-TX	
D174	8-719-404-50	DIODE MA111-TX	
D175	8-719-404-50	DIODE MA111-TX	
D176	8-719-404-50	DIODE MA111-TX	

Ref.No.	Part No.	Description	Remark
D701	8-719-914-43	DIODE DAN202K	
D702	8-719-914-42	DIODE DA204K	
D703	8-719-914-42	DIODE DA204K	
D704	8-719-914-42	DIODE DA204K	
D706	8-719-404-50	DIODE MA111-TX	
D707	8-719-914-43	DIODE DAN202K	
D708	8-719-914-42	DIODE DA204K	
D731	8-719-404-50	DIODE MA111-TX	
D732	8-719-404-50	DIODE MA111-TX	
D733	8-719-974-51	DIODE SB20-03P	
D734	8-719-914-43	DIODE DAN202K	
D801	8-719-914-43	DIODE DAN202K	
D802	8-719-914-43	DIODE DAN202K	
D803	8-719-914-43	DIODE DAN202K	
D804	8-719-914-43	DIODE DAN202K	
D805	8-719-914-43	DIODE DAN202K	
D806	8-719-914-43	DIODE DAN202K	
D807	8-719-914-43	DIODE DAN202K	
D808	8-719-914-43	DIODE DAN202K	
D809	8-719-914-43	DIODE DAN202K	
D810	8-719-914-43	DIODE DAN202K	
D811	8-719-914-43	DIODE DAN202K	
D812	8-719-914-43	DIODE DAN202K	
D813	8-719-914-43	DIODE DAN202K	
D814	8-719-914-43	DIODE DAN202K	
D815	8-719-914-43	DIODE DAN202K	
D842	8-719-404-50	DIODE MA111-TX	
D941	8-719-404-50	DIODE MA111-TX	
D942	8-719-404-50	DIODE MA111-TX	
D943	8-719-404-50	DIODE MA111-TX	
D944	8-719-404-50	DIODE MA111-TX	
D961	8-719-914-42	DIODE DA204K	
D962	8-719-914-42	DIODE DA204K	
D963	8-719-914-42	DIODE DA204K	
D964	8-719-914-42	DIODE DA204K	
D965	8-719-914-42	DIODE DA204K	
D966	8-719-914-42	DIODE DA204K	
D967	8-719-914-42	DIODE DA204K	
D968	8-719-914-42	DIODE DA204K	
D969	8-719-914-42	DIODE DA204K	
D970	8-719-914-42	DIODE DA204K	
D971	8-719-914-42	DIODE DA204K	
D972	8-719-914-42	DIODE DA204K	
D991	8-719-109-89	DIODE RD5.6ESB2	
D992	8-719-109-89	DIODE RD5.6ESB2	
ND200	8-719-071-85	DIODE LA-621LMA	
ND201	8-719-071-85	DIODE LA-621LMA	
		<IC>	
IC11	8-759-186-30	IC TC74VHC14F	
IC12	8-759-479-84	IC TC74HCT541AF(EL)	
IC13	8-759-479-84	IC TC74HCT541AF(EL)	
IC104	8-759-012-02	IC MC10H124M	
IC105	8-759-186-46	IC TC74VHC132F	
IC106	8-759-012-02	IC MC10H124M	
IC107	8-759-186-46	IC TC74VHC132F	
IC108	8-759-186-30	IC TC74VHC14F	
IC171	8-759-144-82	IC UPC2405HF	

Ref.No.	Part No.	Description	Remark
IC172	8-759-144-82	IC UPC2405HF	
IC173	8-759-144-82	IC UPC2405HF	
IC174	8-759-144-82	IC UPC2405HF	
IC175	8-759-460-74	IC BA05FP-E2	
IC176	8-759-247-67	IC LM2990T-5.0	
IC231	8-759-186-47	IC TC74VHC138F	
IC232	8-759-549-37	IC UPD65646GJ-252-8EU	
IC234	8-759-486-26	IC MBM29F800BA-70PFTN	
IC235	8-759-436-45	IC IDT71024S15Y-TL	
IC236	8-759-436-45	IC IDT71024S15Y-TL	
IC237	8-759-186-47	IC TC74VHC138F	
IC238	8-759-186-49	IC TC74VHC139F	
IC251	8-759-568-30	IC IDT74FCT162245CTPA-TL	
IC252	8-759-568-30	IC IDT74FCT162245CTPA-TL	
IC253	8-759-568-30	IC IDT74FCT162245CTPA-TL	
IC301	8-759-549-37	IC UPD65646GJ-252-8EU	
IC311	8-752-887-16	IC CXP846P48Q-1-004	
IC321	8-759-387-75	IC TC7W00F(TE12R)	
IC322	8-759-342-60	IC PST575DMT-T1	
IC333	8-749-015-22	IC DS1245Y-120	
IC421	8-752-391-88	IC CXD305-127R	
IC431	8-752-369-84	IC CXD2309Q-T6	
IC432	8-759-011-65	IC MC74HC4053F	
IC441	8-759-549-38	IC UPD65654GC-327-3B6	
IC442	8-759-186-30	IC TC74VHC14F	
IC452	8-759-563-11	IC CXD8773R	
IC453	8-759-186-51	IC TC74VHC157F	
IC454	8-759-186-43	IC TC74VHC123AF	
IC456	8-759-443-08	IC TC7W241FU-TE12R	
IC457	8-759-186-51	IC TC74VHC157F	
IC501	8-759-430-23	IC UPD65806GD-064-LML	
IC502	8-759-528-39	IC IDT71016S15Y-TL	
IC503	8-759-528-39	IC IDT71016S15Y-TL	
IC504	8-759-242-70	IC TC7WU04F	
IC531	8-759-549-37	IC UPD65646GJ-252-8EU	
IC541	8-759-385-51	IC IDT71321SA55J-TL	
IC551	8-759-421-40	IC MB90091APF-114	
IC571	8-759-569-49	IC EPM7128STC100-15-OSD	
IC572	8-759-994-67	IC MB86022PF	
IC573	8-759-186-46	IC TC74VHC132F	
IC574	8-759-186-43	IC TC74VHC123AF	
IC590	8-759-186-63	IC TC74VHC245F	
IC591	8-759-186-63	IC TC74VHC245F	
IC592	8-759-186-63	IC TC74VHC245F	
IC593	8-759-186-63	IC TC74VHC245F	
IC595	8-759-186-63	IC TC74VHC245F	
IC596	8-759-186-63	IC TC74VHC245F	
IC597	8-759-186-63	IC TC74VHC245F	
IC598	8-759-035-93	IC SC7S32F	
IC601	8-759-394-03	IC ICS1522MT	
IC602	8-759-430-33	IC MC10H640FNR2	
IC701	8-759-186-30	IC TC74VHC14F	
IC702	8-759-525-43	IC TC74HCT08AF(EL)	
IC703	8-759-184-64	IC TC4W66FU	
IC704	8-759-443-08	IC TC7W241FU-TE12R	
IC731	8-759-259-77	IC PQ20VZ5U	
IC732	8-759-100-93	IC UPC393G2	
IC841	8-759-981-61	IC LM2901M	
IC861	8-759-549-37	IC UPD65646GJ-252-8EU	
IC901	8-759-569-50	IC EPM7128STC100-15-7SEG	
IC921	8-759-479-15	IC PC16552DV	
IC941	8-759-471-14	IC MAX202ECSE-T	
IC942	8-759-397-00	IC MAX489ECSD-TE2	
IC961	8-759-566-67	IC MAX3085CSA-TG068	
IC962	8-759-566-67	IC MAX3085CSA-TG068	
		<COIL>	
L431	1-412-058-11	INDUCTOR CHIP 10μH	
L571	1-412-390-21	FERRITE 0μH	
		<TRANSISTOR>	
Q11	8-729-230-49	TRANSISTOR 2SC2712-YG	
Q12	8-729-230-49	TRANSISTOR 2SC2712-YG	
Q200	8-729-216-22	TRANSISTOR 2SA1162-G	
Q201	8-729-216-22	TRANSISTOR 2SA1162-G	
Q202	8-729-216-22	TRANSISTOR 2SA1162-G	
Q203	8-729-216-22	TRANSISTOR 2SA1162-G	
Q401	8-729-230-49	TRANSISTOR 2SC2712-YG	
Q402	8-729-230-49	TRANSISTOR 2SC2712-YG	
Q403	8-729-230-49	TRANSISTOR 2SC2712-YG	
Q404	8-729-230-49	TRANSISTOR 2SC2712-YG	
Q405	8-729-230-49	TRANSISTOR 2SC2712-YG	
Q406	8-729-230-49	TRANSISTOR 2SC2712-YG	
Q531	1-801-806-11	TRANSISTOR DTC144EKA-T146	
Q701	8-729-230-49	TRANSISTOR 2SC2712-YG	
Q702	8-729-230-49	TRANSISTOR 2SC2712-YG	
Q703	1-801-806-11	TRANSISTOR DTC144EKA-T146	
Q704	1-801-806-11	TRANSISTOR DTC144EKA-T146	
Q705	1-801-806-11	TRANSISTOR DTC144EKA-T146	
Q841	1-801-806-11	TRANSISTOR DTC144EKA-T146	
Q842	8-729-900-53	TRANSISTOR DTC114EK	
Q843	8-729-230-49	TRANSISTOR 2SC2712-YG	
Q941	8-729-900-53	TRANSISTOR DTC114EK	
Q942	8-729-900-53	TRANSISTOR DTC114EK	
Q943	8-729-900-53	TRANSISTOR DTC114EK	
Q944	8-729-900-53	TRANSISTOR DTC114EK	
		<RESISTOR>	
R11	1-216-025-91	RES,CHIP 100 5% 1/10W	
R12	1-216-025-91	RES,CHIP 100 5% 1/10W	
R13	1-216-001-00	RES,CHIP 10 5% 1/10W	
R14	1-216-025-91	RES,CHIP 100 5% 1/10W	
R15	1-216-001-00	RES,CHIP 10 5% 1/10W	
R16	1-216-001-00	RES,CHIP 10 5% 1/10W	
R17	1-216-001-00	RES,CHIP 10 5% 1/10W	
R18	1-216-001-00	RES,CHIP 10 5% 1/10W	
R19	1-216-001-00	RES,CHIP 10 5% 1/10W	
R20	1-216-001-00	RES,CHIP 10 5% 1/10W	
R21	1-216-025-91	RES,CHIP 100 5% 1/10W	
R22	1-216-025-91	RES,CHIP 100 5% 1/10W	
R23	1-216-025-91	RES,CHIP 100 5% 1/10W	
R24	1-216-025-91	RES,CHIP 100 5% 1/10W	
R25	1-216-025-91	RES,CHIP 100 5% 1/10W	
R26	1-216-025-91	RES,CHIP 100 5% 1/10W	

YA

Ref.No.	Part No.	Description			Remark
R27	1-216-025-91	RES,CHIP	100	5%	1/10W
R28	1-216-073-00	RES,CHIP	10K	5%	1/10W
R29	1-216-073-00	RES,CHIP	10K	5%	1/10W
R30	1-216-049-91	RES,CHIP	1K	5%	1/10W
R31	1-216-049-91	RES,CHIP	1K	5%	1/10W
R32	1-216-049-91	RES,CHIP	1K	5%	1/10W
R33	1-216-049-91	RES,CHIP	1K	5%	1/10W
R34	1-216-049-91	RES,CHIP	1K	5%	1/10W
R35	1-216-049-91	RES,CHIP	1K	5%	1/10W
R36	1-216-049-91	RES,CHIP	1K	5%	1/10W
R37	1-216-049-91	RES,CHIP	1K	5%	1/10W
R38	1-216-049-91	RES,CHIP	1K	5%	1/10W
R39	1-216-049-91	RES,CHIP	1K	5%	1/10W
R40	1-216-049-91	RES,CHIP	1K	5%	1/10W
R41	1-216-049-91	RES,CHIP	1K	5%	1/10W
R42	1-216-049-91	RES,CHIP	1K	5%	1/10W
R43	1-216-049-91	RES,CHIP	1K	5%	1/10W
R44	1-216-049-91	RES,CHIP	1K	5%	1/10W
R45	1-216-049-91	RES,CHIP	1K	5%	1/10W
R46	1-216-049-91	RES,CHIP	1K	5%	1/10W
R47	1-216-049-91	RES,CHIP	1K	5%	1/10W
R48	1-216-049-91	RES,CHIP	1K	5%	1/10W
R49	1-216-049-91	RES,CHIP	1K	5%	1/10W
R50	1-216-049-91	RES,CHIP	1K	5%	1/10W
R51	1-216-049-91	RES,CHIP	1K	5%	1/10W
R52	1-216-049-91	RES,CHIP	1K	5%	1/10W
R53	1-216-049-91	RES,CHIP	1K	5%	1/10W
R54	1-216-049-91	RES,CHIP	1K	5%	1/10W
R55	1-216-049-91	RES,CHIP	1K	5%	1/10W
R56	1-216-049-91	RES,CHIP	1K	5%	1/10W
R57	1-216-049-91	RES,CHIP	1K	5%	1/10W
R58	1-216-025-91	RES,CHIP	100	5%	1/10W
R59	1-216-025-91	RES,CHIP	100	5%	1/10W
R60	1-216-001-00	RES,CHIP	10	5%	1/10W
R61	1-216-001-00	RES,CHIP	10	5%	1/10W
R62	1-216-001-00	RES,CHIP	10	5%	1/10W
R63	1-216-001-00	RES,CHIP	10	5%	1/10W
R64	1-216-001-00	RES,CHIP	10	5%	1/10W
R65	1-216-001-00	RES,CHIP	10	5%	1/10W
R66	1-216-001-00	RES,CHIP	10	5%	1/10W
R67	1-216-001-00	RES,CHIP	10	5%	1/10W
R68	1-216-025-91	RES,CHIP	100	5%	1/10W
R69	1-216-025-91	RES,CHIP	100	5%	1/10W
R70	1-216-025-91	RES,CHIP	100	5%	1/10W
R71	1-216-025-91	RES,CHIP	100	5%	1/10W
R72	1-216-025-91	RES,CHIP	100	5%	1/10W
R73	1-216-025-91	RES,CHIP	100	5%	1/10W
R74	1-216-025-91	RES,CHIP	100	5%	1/10W
R75	1-216-025-91	RES,CHIP	100	5%	1/10W
R76	1-216-025-91	RES,CHIP	100	5%	1/10W
R77	1-216-025-91	RES,CHIP	100	5%	1/10W
R78	1-216-025-91	RES,CHIP	100	5%	1/10W
R79	1-216-025-91	RES,CHIP	100	5%	1/10W
R80	1-216-025-91	RES,CHIP	100	5%	1/10W
R81	1-216-025-91	RES,CHIP	100	5%	1/10W
R82	1-216-025-91	RES,CHIP	100	5%	1/10W
R83	1-216-025-91	RES,CHIP	100	5%	1/10W
R84	1-216-025-91	RES,CHIP	100	5%	1/10W
R85	1-216-025-91	RES,CHIP	100	5%	1/10W
R86	1-216-025-91	RES,CHIP	100	5%	1/10W
R87	1-216-049-91	RES,CHIP	1K	5%	1/10W
R88	1-216-025-91	RES,CHIP	100	5%	1/10W
R89	1-216-025-91	RES,CHIP	100	5%	1/10W
R90	1-216-025-91	RES,CHIP	100	5%	1/10W
R91	1-216-025-91	RES,CHIP	100	5%	1/10W
R92	1-216-025-91	RES,CHIP	100	5%	1/10W
R93	1-216-025-91	RES,CHIP	100	5%	1/10W
R94	1-216-049-91	RES,CHIP	1K	5%	1/10W
R95	1-216-049-91	RES,CHIP	1K	5%	1/10W
R96	1-216-049-91	RES,CHIP	1K	5%	1/10W
R97	1-216-025-91	RES,CHIP	100	5%	1/10W
R98	1-216-025-91	RES,CHIP	100	5%	1/10W
R99	1-216-025-91	RES,CHIP	100	5%	1/10W
R100	1-216-045-00	RES,CHIP	680	5%	1/10W
R101	1-216-045-00	RES,CHIP	680	5%	1/10W
R102	1-216-045-00	RES,CHIP	680	5%	1/10W
R103	1-216-045-00	RES,CHIP	680	5%	1/10W
R104	1-216-045-00	RES,CHIP	680	5%	1/10W
R105	1-216-045-00	RES,CHIP	680	5%	1/10W
R106	1-216-045-00	RES,CHIP	680	5%	1/10W
R107	1-216-045-00	RES,CHIP	680	5%	1/10W
R108	1-216-047-91	RES,CHIP	820	5%	1/10W
R109	1-216-047-91	RES,CHIP	820	5%	1/10W
R110	1-216-047-91	RES,CHIP	820	5%	1/10W
R111	1-216-047-91	RES,CHIP	820	5%	1/10W
R112	1-216-047-91	RES,CHIP	820	5%	1/10W
R113	1-216-047-91	RES,CHIP	820	5%	1/10W
R114	1-216-047-91	RES,CHIP	820	5%	1/10W
R115	1-216-047-91	RES,CHIP	820	5%	1/10W
R116	1-216-047-91	RES,CHIP	820	5%	1/10W
R117	1-216-047-91	RES,CHIP	820	5%	1/10W
R118	1-216-047-91	RES,CHIP	820	5%	1/10W
R119	1-216-047-91	RES,CHIP	820	5%	1/10W
R120	1-216-047-91	RES,CHIP	820	5%	1/10W
R121	1-216-049-91	RES,CHIP	1K	5%	1/10W
R122	1-216-049-91	RES,CHIP	1K	5%	1/10W
R151	1-216-001-00	RES,CHIP	10	5%	1/10W
R152	1-216-025-91	RES,CHIP	100	5%	1/10W
R153	1-216-025-91	RES,CHIP	100	5%	1/10W
R154	1-216-001-00	RES,CHIP	10	5%	1/10W
R155	1-216-001-00	RES,CHIP	10	5%	1/10W
R156	1-216-025-91	RES,CHIP	100	5%	1/10W
R157	1-216-025-91	RES,CHIP	100	5%	1/10W
R158	1-216-001-00	RES,CHIP	10	5%	1/10W
R159	1-216-001-00	RES,CHIP	10	5%	1/10W
R160	1-216-001-00	RES,CHIP	10	5%	1/10W
R161	1-216-001-00	RES,CHIP	10	5%	1/10W
R162	1-216-001-00	RES,CHIP	10	5%	1/10W
R163	1-216-001-00	RES,CHIP	10	5%	1/10W
R171	1-216-295-91	SHORT 0			
R172	1-216-295-91	SHORT 0			
R173	1-216-295-91	SHORT 0			
R174	1-216-295-91	SHORT 0			
R175	1-216-295-91	SHORT 0			
R176	1-216-295-91	SHORT 0			
R177	1-216-041-00	RES,CHIP	470	5%	1/10W
R200	1-216-049-91	RES,CHIP	1K	5%	1/10W
R201	1-216-031-00	RES,CHIP	180	5%	1/10W

Ref.No.	Part No.	Description			Remark
R201	1-216-049-91	RES,CHIP	1K	5%	1/10W
R202	1-216-025-91	RES,CHIP	100	5%	1/10W
R202	1-216-049-91	RES,CHIP	1K	5%	1/10W
R203	1-216-001-00	RES,CHIP	10	5%	1/10W
R203	1-216-049-91	RES,CHIP	1K	5%	1/10W
R204	1-216-025-91	RES,CHIP	100	5%	1/10W
R204	1-216-059-00	RES,CHIP	2.7K	5%	1/10W
R205	1-216-025-91	RES,CHIP	100	5%	1/10W
R205	1-216-031-00	RES,CHIP	180	5%	1/10W
R206	1-216-025-91	RES,CHIP	100	5%	1/10W
R206	1-216-073-00	RES,CHIP	10K	5%	1/10W
R207	1-216-025-91	RES,CHIP	100	5%	1/10W
R207	1-216-073-00	RES,CHIP	10K	5%	1/10W
R208	1-216-025-91	RES,CHIP	100	5%	1/10W
R208	1-216-073-00	RES,CHIP	10K	5%	1/10W
R209	1-216-025-91	RES,CHIP	100	5%	1/10W
R209	1-216-073-00	RES,CHIP	10K	5%	1/10W
R210	1-216-025-91	RES,CHIP	100	5%	1/10W
R210	1-216-073-00	RES,CHIP	10K	5%	1/10W
R211	1-216-025-91	RES,CHIP	100	5%	1/10W
R211	1-216-073-00	RES,CHIP	10K	5%	1/10W
R212	1-216-073-00	RES,CHIP	10K	5%	1/10W
R213	1-216-073-00	RES,CHIP	10K	5%	1/10W
R214	1-216-073-00	RES,CHIP	10K	5%	1/10W
R215	1-216-073-00	RES,CHIP	10K	5%	1/10W
R216	1-216-073-00	RES,CHIP	10K	5%	1/10W
R217	1-216-057-00	RES,CHIP	2.2K	5%	1/10W
R218	1-216-057-00	RES,CHIP	2.2K	5%	1/10W
R219	1-216-057-00	RES,CHIP	2.2K	5%	1/10W
R220	1-216-057-00	RES,CHIP	2.2K	5%	1/10W
R221	1-216-073-00	RES,CHIP	10K	5%	1/10W
R222	1-216-073-00	RES,CHIP	10K	5%	1/10W
R223	1-216-073-00	RES,CHIP	10K	5%	1/10W
R224	1-216-073-00	RES,CHIP	10K	5%	1/10W
R225	1-216-073-00	RES,CHIP	10K	5%	1/10W
R226	1-216-073-00	RES,CHIP	10K	5%	1/10W
R227	1-216-073-00	RES,CHIP	10K	5%	1/10W
R228	1-216-073-00	RES,CHIP	10K	5%	1/10W
R231	1-216-025-91	RES,CHIP	100	5%	1/10W
R236	1-216-073-00	RES,CHIP	10K	5%	1/10W
R237	1-216-073-00	RES,CHIP	10K	5%	1/10W
R241	1-216-073-00	RES,CHIP	10K	5%	1/10W
R242	1-216-073-00	RES,CHIP	10K	5%	1/10W
R243	1-216-073-00	RES,CHIP	10K	5%	1/10W
R244	1-216-073-00	RES,CHIP	10K	5%	1/10W
R245	1-216-073-00	RES,CHIP	10K	5%	1/10W
R246	1-216-073-00	RES,CHIP	10K	5%	1/10W
R247	1-216-073-00	RES,CHIP	10K	5%	1/10W
R248	1-216-073-00	RES,CHIP	10K	5%	1/10W
R301	1-216-025-91	RES,CHIP	100	5%	1/10W
R303	1-216-073-00	RES,CHIP	10K	5%	1/10W
R305	1-216-073-00	RES,CHIP	10K	5%	1/10W
R315	1-216-025-91	RES,CHIP	100	5%	1/10W
R321	1-216-073-00	RES,CHIP	10K	5%	1/10W
R322	1-216-097-91	RES,CHIP	100K	5%	1/10W
R403	1-216-065-91	RES,CHIP	4.7K	5%	1/10W
R404	1-216-073-00	RES,CHIP	10K	5%	1/10W
R405	1-216-065-91	RES,CHIP	4.7K	5%	1/10W
R406	1-216-065-91	RES,CHIP	4.7K	5%	1/10W
R407	1-216-073-00	RES,CHIP	10K	5%	1/10W
R408	1-216-065-91	RES,CHIP	4.7K	5%	1/10W
R409	1-216-065-91	RES,CHIP	4.7K	5%	1/10W
R410	1-216-073-00	RES,CHIP	10K	5%	1/10W
R411	1-216-065-91	RES,CHIP	4.7K	5%	1/10W
R412	1-216-065-91	RES,CHIP	4.7K	5%	1/10W
R413	1-216-073-00	RES,CHIP	10K	5%	1/10W
R414	1-216-065-91	RES,CHIP	4.7K	5%	1/10W
R415	1-216-065-91	RES,CHIP	4.7K	5%	1/10W
R416	1-216-073-00	RES,CHIP	10K	5%	1/10W
R417	1-216-065-91	RES,CHIP	4.7K	5%	1/10W
R418	1-216-065-91	RES,CHIP	4.7K	5%	1/10W
R419	1-216-073-00	RES,CHIP	10K	5%	1/10W
R420	1-216-065-91	RES,CHIP	4.7K	5%	1/10W
R424	1-216-295-91	SHORT 0			
R431	1-216-061-00	RES,CHIP	3.3K	5%	1/10W
R432	1-216-055-00	RES,CHIP	1.8K	5%	1/10W
R433	1-216-059-00	RES,CHIP	2.7K	5%	1/10W
R434	1-216-031-00	RES,CHIP	180	5%	1/10W
R435	1-216-031-00	RES,CHIP	180	5%	1/10W
R436	1-216-031-00	RES,CHIP	180	5%	1/10W
R442	1-216-121-91	RES,CHIP	1M	5%	1/10W
R443	1-216-025-91	RES,CHIP	100	5%	1/10W
R452	1-216-025-91	RES,CHIP	100	5%	1/10W
R453	1-216-017-91	RES,CHIP	47	5%	1/10W
R454	1-216-667-11	METAL CHIP	4.7K	0.50%	1/10W
R455	1-216-121-91	RES,CHIP	1M	5%	1/10W
R456	1-216-025-91	RES,CHIP	100	5%	1/10W
R457	1-216-073-00	RES,CHIP	10K	5%	1/10W
R458	1-216-295-91	SHORT 0			
R459	1-216-295-91	SHORT 0			
R460	1-216-073-00	RES,CHIP	10K	5%	1/10W
R461	1-216-295-91	SHORT 0			
R462	1-216-295-91	SHORT 0			
R463	1-216-667-11	METAL CHIP	4.7K	0.50%	1/10W
R464	1-216-073-00	RES,CHIP	10K	5%	1/10W
R466	1-216-295-91	SHORT 0			
R502	1-216-295-91	SHORT 0			
R503	1-216-295-91	SHORT 0			
R504	1-216-295-91	SHORT 0			
R505	1-216-025-91	RES,CHIP	100	5%	1/10W
R506	1-216-001-00	RES,CHIP	10	5%	1/10W
R507	1-216-001-00	RES,CHIP	10	5%	1/10W
R508	1-216-001-00	RES,CHIP	10	5%	1/10W
R509	1-216-001-00	RES,CHIP	10	5%	1/10W
R510	1-216-025-91	RES,CHIP	100	5%	1/10W
R511	1-216-025-91	RES,CHIP	100	5%	1/10W
R512	1-216-295-91	SHORT 0			
R513	1-216-033-00	RES,CHIP	220	5%	1/10W
R514	1-216-073-00	RES,CHIP	10K	5%	1/10W
R515	1-216-073-00	RES,CHIP	10K	5%	1/10W
R516	1-216-073-00	RES,CHIP	10K	5%	1/10W
R517	1-216-073-00	RES,CHIP	10K	5%	1/10W
R518	1-216-073-00	RES,CHIP	10K	5%	1/10W
R519	1-216-073-00	RES,CHIP	10K	5%	1/10W
R520	1-216-073-00	RES,CHIP	10K	5%	1/10W
R521	1-216-073-00	RES,CHIP	10K	5%	1/10W

YA

Ref.No.	Part No.	Description			Remark
R522	1-216-295-91	SHORT 0			
R525	1-216-097-91	RES,CHIP	100K	5%	1/10W
R526	1-216-001-00	RES,CHIP	10	5%	1/10W
R527	1-216-001-00	RES,CHIP	10	5%	1/10W
R531	1-216-025-91	RES,CHIP	100	5%	1/10W
R532	1-216-073-00	RES,CHIP	10K	5%	1/10W
R533	1-216-049-91	RES,CHIP	1K	5%	1/10W
R541	1-216-073-00	RES,CHIP	10K	5%	1/10W
R542	1-216-073-00	RES,CHIP	10K	5%	1/10W
R543	1-216-073-00	RES,CHIP	10K	5%	1/10W
R551	1-216-073-00	RES,CHIP	10K	5%	1/10W
R552	1-216-073-00	RES,CHIP	10K	5%	1/10W
R553	1-216-025-91	RES,CHIP	100	5%	1/10W
R554	1-216-025-91	RES,CHIP	100	5%	1/10W
R555	1-216-025-91	RES,CHIP	100	5%	1/10W
R556	1-216-073-00	RES,CHIP	10K	5%	1/10W
R557	1-216-045-00	RES,CHIP	680	5%	1/10W
R558	1-216-073-00	RES,CHIP	10K	5%	1/10W
R561	1-216-057-00	RES,CHIP	2.2K	5%	1/10W
R562	1-216-295-91	SHORT 0			
R571	1-216-001-00	RES,CHIP	10	5%	1/10W
R576	1-216-073-00	RES,CHIP	10K	5%	1/10W
R583	1-216-025-91	RES,CHIP	100	5%	1/10W
R585	1-216-049-91	RES,CHIP	1K	5%	1/10W
R586	1-216-025-91	RES,CHIP	100	5%	1/10W
R587	1-216-025-91	RES,CHIP	100	5%	1/10W
R588	1-216-049-91	RES,CHIP	1K	5%	1/10W
R589	1-216-073-00	RES,CHIP	10K	5%	1/10W
R601	1-216-001-00	RES,CHIP	10	5%	1/10W
R602	1-216-049-91	RES,CHIP	1K	5%	1/10W
R603	1-216-001-00	RES,CHIP	10	5%	1/10W
R604	1-216-695-11	METAL CHIP	68K	0.50%	1/10W
R606	1-216-644-11	METAL CHIP	510	0.50%	1/10W
R607	1-216-001-00	RES,CHIP	10	5%	1/10W
R608	1-216-001-00	RES,CHIP	10	5%	1/10W
R609	1-216-023-00	RES,CHIP	82	5%	1/10W
R610	1-216-057-00	RES,CHIP	2.2K	5%	1/10W
R611	1-216-023-00	RES,CHIP	82	5%	1/10W
R612	1-216-057-00	RES,CHIP	2.2K	5%	1/10W
R613	1-216-298-00	RES,CHIP	2.2	5%	1/10W
R614	1-216-001-00	RES,CHIP	10	5%	1/10W
R615	1-216-295-91	SHORT 0			
R701	1-216-073-00	RES,CHIP	10K	5%	1/10W
R702	1-216-025-91	RES,CHIP	100	5%	1/10W
R703	1-216-073-00	RES,CHIP	10K	5%	1/10W
R704	1-216-025-91	RES,CHIP	100	5%	1/10W
R705	1-216-073-00	RES,CHIP	10K	5%	1/10W
R706	1-216-073-00	RES,CHIP	10K	5%	1/10W
R707	1-216-025-91	RES,CHIP	100	5%	1/10W
R708	1-216-073-00	RES,CHIP	10K	5%	1/10W
R709	1-216-107-00	RES,CHIP	270K	5%	1/10W
R710	1-216-097-91	RES,CHIP	100K	5%	1/10W
R714	1-216-057-00	RES,CHIP	2.2K	5%	1/10W
R715	1-216-057-00	RES,CHIP	2.2K	5%	1/10W
R716	1-216-057-00	RES,CHIP	2.2K	5%	1/10W
R717	1-216-037-00	RES,CHIP	330	5%	1/10W
R718	1-216-073-00	RES,CHIP	10K	5%	1/10W
R719	1-216-049-91	RES,CHIP	1K	5%	1/10W
R720	1-216-073-00	RES,CHIP	10K	5%	1/10W

Ref.No.	Part No.	Description			Remark
R731	1-216-667-11	METAL CHIP	4.7K	0.50%	1/10W
R732	1-216-655-11	METAL CHIP	1.5K	0.50%	1/10W
R733	1-216-426-11	METAL OXIDE	82	5%	1W F
R734	1-216-049-91	RES,CHIP	1K	5%	1/10W
R735	1-216-073-00	RES,CHIP	10K	5%	1/10W
R736	1-216-073-00	RES,CHIP	10K	5%	1/10W
R737	1-216-079-00	RES,CHIP	18K	5%	1/10W
R738	1-216-085-00	RES,CHIP	33K	5%	1/10W
R739	1-216-081-00	RES,CHIP	22K	5%	1/10W
R740	1-216-073-00	RES,CHIP	10K	5%	1/10W
R741	1-216-089-91	RES,CHIP	47K	5%	1/10W
R841	1-216-073-00	RES,CHIP	10K	5%	1/10W
R842	1-216-089-91	RES,CHIP	47K	5%	1/10W
R843	1-216-073-00	RES,CHIP	10K	5%	1/10W
R844	1-216-295-91	SHORT 0			
R845	1-216-295-91	SHORT 0			
R846	1-216-097-91	RES,CHIP	100K	5%	1/10W
R847	1-216-073-00	RES,CHIP	10K	5%	1/10W
R848	1-216-073-00	RES,CHIP	10K	5%	1/10W
R849	1-216-049-91	RES,CHIP	1K	5%	1/10W
R850	1-216-049-91	RES,CHIP	1K	5%	1/10W
R851	1-216-089-91	RES,CHIP	47K	5%	1/10W
R852	1-216-097-91	RES,CHIP	100K	5%	1/10W
R853	1-216-073-00	RES,CHIP	10K	5%	1/10W
R854	1-216-073-00	RES,CHIP	10K	5%	1/10W
R855	1-216-073-00	RES,CHIP	10K	5%	1/10W
R856	1-216-073-00	RES,CHIP	10K	5%	1/10W
R857	1-216-073-00	RES,CHIP	10K	5%	1/10W
R858	1-216-085-00	RES,CHIP	33K	5%	1/10W
R859	1-216-073-00	RES,CHIP	10K	5%	1/10W
R860	1-216-073-00	RES,CHIP	10K	5%	1/10W
R861	1-216-025-91	RES,CHIP	100	5%	1/10W
R862	1-216-065-91	RES,CHIP	4.7K	5%	1/10W
R863	1-216-073-00	RES,CHIP	10K	5%	1/10W
R864	1-216-073-00	RES,CHIP	10K	5%	1/10W
R921	1-216-073-00	RES,CHIP	10K	5%	1/10W
R922	1-216-073-00	RES,CHIP	10K	5%	1/10W
R923	1-216-073-00	RES,CHIP	10K	5%	1/10W
R924	1-216-073-00	RES,CHIP	10K	5%	1/10W
R925	1-216-073-00	RES,CHIP	10K	5%	1/10W
R926	1-216-073-00	RES,CHIP	10K	5%	1/10W
R927	1-216-073-00	RES,CHIP	10K	5%	1/10W
R929	1-216-121-91	RES,CHIP	1M	5%	1/10W
R930	1-216-025-91	RES,CHIP	100	5%	1/10W
R961	1-216-295-91	SHORT 0			
R962	1-216-295-91	SHORT 0			
R963	1-216-295-91	SHORT 0			
R964	1-216-295-91	SHORT 0			
R965	1-216-049-91	RES,CHIP	1K	5%	1/10W
R966	1-216-295-91	SHORT 0			
R967	1-216-295-91	SHORT 0			
R968	1-216-295-91	SHORT 0			
R969	1-216-295-91	SHORT 0			
R970	1-216-295-91	SHORT 0			
R971	1-216-295-91	SHORT 0			
R972	1-216-025-91	RES,CHIP	100	5%	1/10W
R973	1-216-025-91	RES,CHIP	100	5%	1/10W
R974	1-216-295-91	SHORT 0			

Ref.No.	Part No.	Description	Remark
R975	1-216-295-91	SHORT 0	
R991	1-247-839-31	CARBON 2.2K 5% 1/4W	
R992	1-247-839-31	CARBON 2.2K 5% 1/4W	
	<RESISTOR BLOCK>		
RB11	1-233-576-11	RES, CHIP NETWORK 100	
RB13	1-233-576-11	RES, CHIP NETWORK 100	
RB14	1-233-576-11	RES, CHIP NETWORK 100	
RB15	1-233-576-11	RES, CHIP NETWORK 100	
RB16	1-233-576-11	RES, CHIP NETWORK 100	
RB201	1-236-908-11	RES, CHIP NETWORK 10K (3216)	
RB202	1-236-908-11	RES, CHIP NETWORK 10K (3216)	
RB203	1-236-908-11	RES, CHIP NETWORK 10K (3216)	
RB204	1-236-908-11	RES, CHIP NETWORK 10K (3216)	
RB205	1-236-908-11	RES, CHIP NETWORK 10K (3216)	
RB206	1-236-908-11	RES, CHIP NETWORK 10K (3216)	
RB207	1-236-908-11	RES, CHIP NETWORK 10K (3216)	
RB301	1-233-576-11	RES, CHIP NETWORK 100	
RB302	1-233-576-11	RES, CHIP NETWORK 100	
RB303	1-233-576-11	RES, CHIP NETWORK 100	
RB451	1-236-908-11	RES, CHIP NETWORK 10K (3216)	
RB452	1-236-908-11	RES, CHIP NETWORK 10K (3216)	
RB453	1-236-908-11	RES, CHIP NETWORK 10K (3216)	
RB501	1-233-412-11	RES, CHIP NETWORK 1.0K (3216)	
RB531	1-233-576-11	RES, CHIP NETWORK 100	
RB532	1-233-576-11	RES, CHIP NETWORK 100	
RB551	1-233-574-11	RES, CHIP NETWORK 10	
RB552	1-233-574-11	RES, CHIP NETWORK 10	
RB571	1-233-574-11	RES, CHIP NETWORK 10	
RB701	1-236-908-11	RES, CHIP NETWORK 10K (3216)	
RB861	1-236-908-11	RES, CHIP NETWORK 10K (3216)	
RB862	1-236-908-11	RES, CHIP NETWORK 10K (3216)	
RB863	1-236-908-11	RES, CHIP NETWORK 10K (3216)	
RB864	1-236-908-11	RES, CHIP NETWORK 10K (3216)	
RB865	1-236-908-11	RES, CHIP NETWORK 10K (3216)	
RB866	1-236-908-11	RES, CHIP NETWORK 10K (3216)	
RB867	1-236-908-11	RES, CHIP NETWORK 10K (3216)	
RB868	1-236-908-11	RES, CHIP NETWORK 10K (3216)	
RB961	1-236-908-11	RES, CHIP NETWORK 10K (3216)	
RB962	1-236-908-11	RES, CHIP NETWORK 10K (3216)	
RB963	1-233-576-11	RES, CHIP NETWORK 100	
RB964	1-233-576-11	RES, CHIP NETWORK 100	
	<RELAY>		
RY941	1-515-716-11	RELAY (TQ2-5V)	
RY942	1-515-716-11	RELAY (TQ2-5V)	
RY943	1-515-716-11	RELAY (TQ2-5V)	
RY944	1-515-716-11	RELAY (TQ2-5V)	
	<SWITCH>		
S201	1-570-598-11	SWITCH, DIP	
S202	1-570-204-21	SWITCH, KEY BOARD	
S203	1-570-204-21	SWITCH, KEY BOARD	
S204	1-692-271-21	SWITCH, SLIDE	
S205	1-692-271-21	SWITCH, SLIDE	
S961	1-571-658-11	SWITCH, SLIDE	
S962	1-572-853-11	SWITCH, ROTARY	
S963	1-572-853-11	SWITCH, ROTARY	
	<TERMINAL BOARD>		
TB701	1-694-480-11	TERMINAL BOARD ASSY, I/O	
TB961	1-694-479-11	TERMINAL BOARD ASSY, I/O	
	<TEST PIN>		
TP11	1-535-757-11	CHIP, CHECKER	
TP40	1-535-757-11	CHIP, CHECKER	
TP43	1-535-757-11	CHIP, CHECKER	
TP44	1-535-757-11	CHIP, CHECKER	
TP45	1-535-757-11	CHIP, CHECKER	
TP151	1-535-757-11	CHIP, CHECKER	
TP152	1-535-757-11	CHIP, CHECKER	
TP153	1-535-757-11	CHIP, CHECKER	
TP154	1-535-757-11	CHIP, CHECKER	
TP201	1-535-757-11	CHIP, CHECKER	
TP202	1-535-757-11	CHIP, CHECKER	
TP203	1-535-757-11	CHIP, CHECKER	
TP204	1-535-757-11	CHIP, CHECKER	
TP205	1-535-757-11	CHIP, CHECKER	
TP231	1-535-757-11	CHIP, CHECKER	
TP251	1-535-757-11	CHIP, CHECKER	
TP252	1-535-757-11	CHIP, CHECKER	
TP301	1-535-757-11	CHIP, CHECKER	
TP311	1-535-757-11	CHIP, CHECKER	
TP312	1-535-757-11	CHIP, CHECKER	
TP321	1-535-757-11	CHIP, CHECKER	
TP401	1-535-757-11	CHIP, CHECKER	
TP402	1-535-757-11	CHIP, CHECKER	
TP424	1-535-757-11	CHIP, CHECKER	
TP425	1-535-757-11	CHIP, CHECKER	
TP428	1-535-757-11	CHIP, CHECKER	
TP429	1-535-757-11	CHIP, CHECKER	
TP431	1-535-757-11	CHIP, CHECKER	
TP432	1-535-757-11	CHIP, CHECKER	
TP441	1-535-757-11	CHIP, CHECKER	
TP442	1-535-757-11	CHIP, CHECKER	
TP443	1-535-757-11	CHIP, CHECKER	
TP451	1-535-757-11	CHIP, CHECKER	
TP452	1-535-757-11	CHIP, CHECKER	
TP453	1-535-757-11	CHIP, CHECKER	
TP454	1-535-757-11	CHIP, CHECKER	
TP455	1-535-757-11	CHIP, CHECKER	
TP456	1-535-757-11	CHIP, CHECKER	
TP457	1-535-757-11	CHIP, CHECKER	
TP458	1-535-757-11	CHIP, CHECKER	
TP459	1-535-757-11	CHIP, CHECKER	
TP460	1-535-757-11	CHIP, CHECKER	
TP461	1-535-757-11	CHIP, CHECKER	
TP501	1-535-757-11	CHIP, CHECKER	
TP531	1-535-757-11	CHIP, CHECKER	
TP551	1-535-757-11	CHIP, CHECKER	
TP552	1-535-757-11	CHIP, CHECKER	
TP553	1-535-757-11	CHIP, CHECKER	
TP554	1-535-757-11	CHIP, CHECKER	

YA

Ref.No.	Part No.	Description	Remark
TP601	1-535-757-11	CHIP, CHECKER	
TP602	1-535-757-11	CHIP, CHECKER	
TP861	1-535-757-11	CHIP, CHECKER	
TP941	1-535-757-11	CHIP, CHECKER	
TP942	1-535-757-11	CHIP, CHECKER	
TP961	1-535-757-11	CHIP, CHECKER	
TP963	1-535-757-11	CHIP, CHECKER	
TP964	1-535-757-11	CHIP, CHECKER	
TP966	1-535-757-11	CHIP, CHECKER	
TP967	1-535-757-11	CHIP, CHECKER	
	<CRYSTAL>		
X201	1-781-201-21	VIBRATOR, CRYSTAL	
X311	1-579-070-41	VIBRATOR, CRYSTAL	
X441	1-760-273-11	VIBRATOR, CRYSTAL	
X451	1-760-273-11	VIBRATOR, CRYSTAL	
X501	1-760-273-11	VIBRATOR, CRYSTAL	
X921	1-579-977-21	VIBRATOR, CRYSTAL	

****

MISCELLANEOUS
****

Ref.No.	Part No.	Description	Remark
V901	⚠A-1501-411-A	COUPLING (R) ASSY, CRT	
V902	⚠A-1501-412-A	COUPLING (G) ASSY, CRT	
V903	⚠A-1501-413-A	COUPLING (B) ASSY, CRT	
	1-416-876-11	COIL, 2-4 P	
	⚠1-451-478-11	DEFLECTION YOKE	
	1-452-964-11	MAGNET, FOCUS	
	⚠1-251-263-11	INLET, AC	
	⚠1-771-602-11	SWITCH, AC POWER	
	1-771-559-11	SWITCH, TOGGLE	
	1-771-560-11	SWITCH, TOGGLE	
	1-418-090-11	REMOTE COMMANDER(A)(RM-PJ1001)	
	⚠1-453-108-32	DC BLOCK, HIGH-VOLTAGE	
	1-900-242-15	CONNECTOR ASSY, HV (4)	
	1-900-242-16	CONNECTOR ASSY, HV (5)	
	1-763-199-11	FAN, DC	
	1-763-229-11	FAN, DC	
F1	⚠1-533-694-11	FUSE GLASS ((UL)ET) (10A/250V) (G90U)	
F1	⚠1-533-576-11	FUSE, TIME-LAG ((UL)ET) (G90E/G90M)	
F3	⚠1-533-694-11	FUSE GLASS ((UL)ET) (10A/250V) (G90U)	
F3	⚠1-533-576-11	FUSE, TIME-LAG ((UL)ET) (G90E/G90M)	
FBT10	⚠X-4034-325-1	TRANSFORMER ASSY, FLYBACK (R) (NX3031//J1W) (L=270)	
FBT10	⚠X-4033-245-1	TRANSFORMER ASSY, FLYBACK (L) (NX3031//J1S) (L=300)	
FBT11	⚠X-4033-245-1	TRANSFORMER ASSY, FLYBACK (R) (NX3031//J1S) (L=300)	
FBT11	⚠X-4034-326-1	TRANSFORMER ASSY, FLYBACK (L) (NX3031//J1X) (L=330)	

****

ACCESSORIES
****

Ref.No.	Part No.	Description	Remark
	⚠A-1500-012-A	BATTERY ASSY	
	⚠1-506-411-21	ADAPTOR, AC PLUG 3P-2P	
	⚠1-696-607-22	CORD, CONNECTION (WITH PLUG)	
	⚠1-775-981-11	CORD SET, POWER (G90U)	
	⚠1-575-175-11	CORD SET, POWER (G90E/G90M)	
	1-782-021-11	CORD, CONNECTION	
	1-785-523-11	TERMINATOR, D SUB 9P	
	3-865-264-11	MANUAL, INSTALLATION (ENGLISH)	
	3-865-265-11	MANUAL, INSTRUCTION (ENGLISH)	
	* 3-704-356-01	SHEET (STANDARD), PROTECTION	
	4-032-113-01	REINFORCEMENT	
	* 4-396-077-01	JOINT	

****

RM-PJ1001
****

Ref.No.	Part No.	Description	Remark
	3-864-769-01	MANUAL, INSTRUCTION (JAPANESE, ENGLISH, FRENCH, GERMAN, ITALIAN, SPANISH, CHINESE)	
	9-881-527-01	COVER, BATTERY	
	9-939-510-01	COVER, KEY	

****

PSS-90
****

Ref.No.	Part No.	Description	Remark
	3-865-277-01	INSTALLATION MANUAL (JAPANESE, ENGLISH, FRENCH, GERMAN, ITALIAN, SPANISH, CHINESE)	
	7-688-002-22	FLAT WASHER M8	
	7-623-214-27	SPRING WASHER M8	
	7-683-380-07	HEXAGONAL BOLT M8 × 20	
	7-623-213-22	SPRING WASHER M6	
	4-056-753-01	SPACER	
	7-683-353-07	HEXAGONAL BOLT M6 × 12	
	7-688-006-12	FLAT WASHER M6	

****

IFB-G90E (VPH-G90E ONLY)
****

Ref.No.	Part No.	Description	Remark
	3-865-266-11	INSTALLATION MANUAL (ENGLISH, FRENCH, GERMAN, ITALIAN, SPANISH)	

SECTION 9
BLOCK DIAGRAMS

9-1

BA (1/3)

BA (1/3)

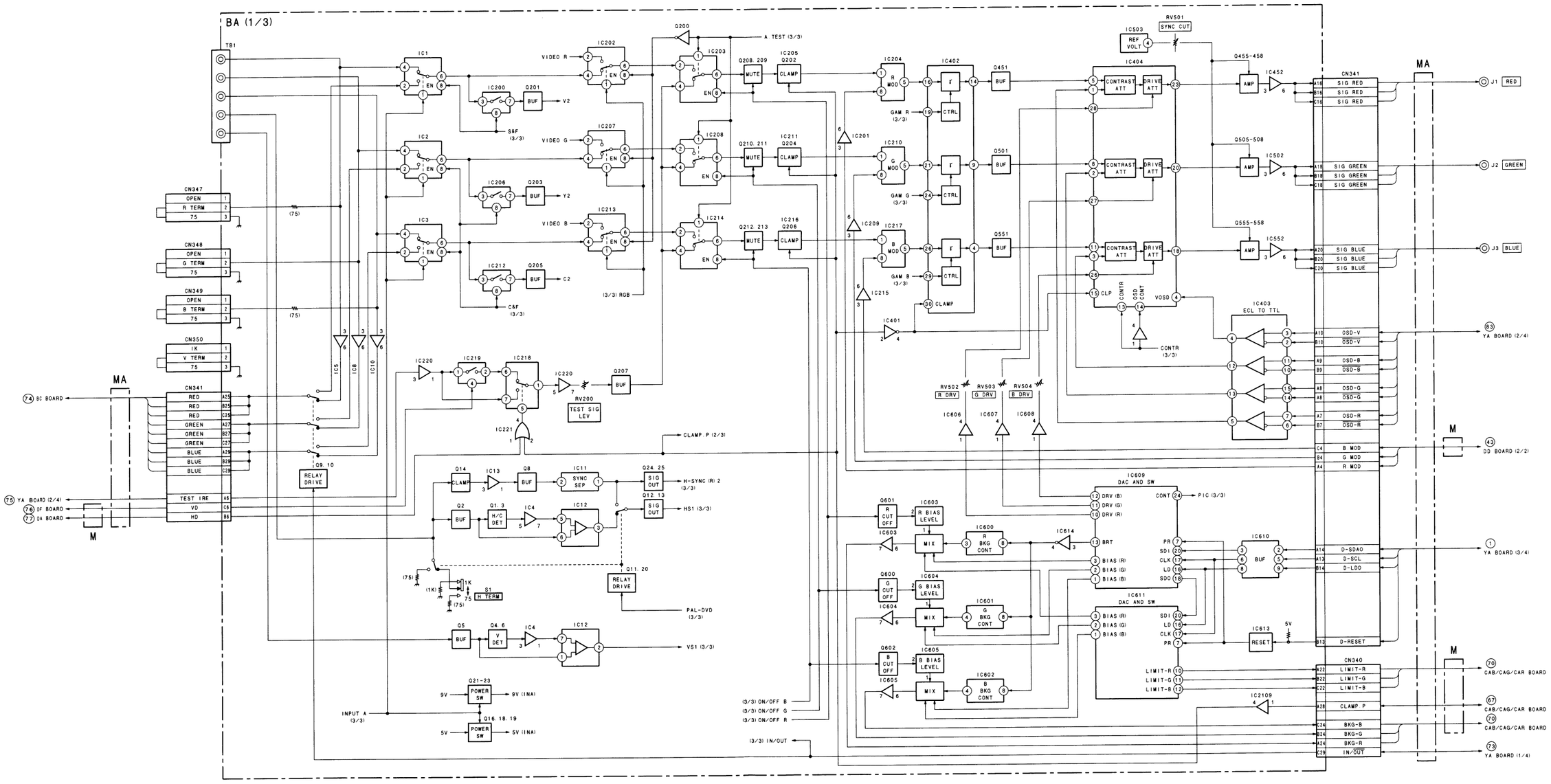
BA (1/3)
TB1
CN347
OPEN
R TERM
75
CN348
OPEN
G TERM
75
CN349
OPEN
B TERM
75
CN350
IK
V TERM
75
CN341
RED
GREEN
BLUE
TEST IRE
VD
HD
MA
M
(74) BC BOARD
(75) YA BOARD (2/4)
(76) DF BOARD
(77) DA BOARD
IC1
IC2
IC3
IC200
IC206
IC212
IC202
IC207
IC213
Q201
Q203
Q205
VIDEO R
VIDEO G
VIDEO B
V2
Y2
C2
S&F (3/3)
C&F (3/3)
(3/3) RGB
Q200
A. TEST (3/3)
IC203
IC208
IC214
IC205
IC211
IC216
Q202
Q204
Q206
Q208. 209
Q210. 211
Q212. 213
MUTE
CLAMP
IC201
IC209
IC215
IC204
IC210
IC217
R MOD
G MOD
B MOD
GAM R (3/3)
GAM G (3/3)
GAM B (3/3)
IC402
IC401
CLAMP
Q451
Q501
Q551
BUF
IC404
CONTRAST ATT
DRIVE ATT
CLP
CONTR
OSD CONT
VOSD
CONTR (3/3)
IC503
REF VOLT
RV501
SYNC CUT
Q455-458
Q505-508
Q555-558
IC452
IC502
IC552
AMP
IC403
ECL TO TTL
RV502
RV503
RV504
R DRV
G DRV
B DRV
IC606
IC607
IC608
CN341
SIG RED
SIG GREEN
SIG BLUE
OSD-V
OSD-B
OSD-G
OSD-R
B MOD
G MOD
R MOD
D-SDAO
D-SCL
D-LDO
D-RESET
CN340
LIMIT-R
LIMIT-G
LIMIT-B
CLAMP P
BKG-B
BKG-G
BKG-R
IN/OUT
J1 RED
J2 GREEN
J3 BLUE
(83) YA BOARD (2/4)
(43) DD BOARD (2/2)
(1) YA BOARD (3/4)
(70) CAB/CAG/CAR BOARD
(67) CAB/CAG/CAR BOARD
(70) CAB/CAG/CAR BOARD
(73) YA BOARD (1/4)
IC5
IC8
IC10
Q9. 10
RELAY DRIVE
IC220
IC219
IC218
IC221
Q207
RV200
TEST SIG LEV
CLAMP. P (2/3)
Q14
Q13
Q8
Q2
Q1. 3
Q4. 6
Q5
CLAMP
BUF
H/C DET
V DET
IC11
IC12
IC4
SYNC SEP
Q24. 25
Q12. 13
SIG OUT
H-SYNC (R) 2 (3/3)
HS1 (3/3)
Q11. 20
PAL-DVD (3/3)
VS1 (3/3)
S1
H TERM
1K
75
(1K)
(75)
Q21-23
Q16. 18. 19
POWER SW
9V
5V
9V (INA)
5V (INA)
INPUT A (3/3)
(3/3) ON/OFF B
(3/3) ON/OFF G
(3/3) ON/OFF R
(3/3) IN/OUT
Q601
Q600
Q602
R CUT OFF
G CUT OFF
B CUT OFF
IC603
IC604
IC605
R BIAS LEVEL
G BIAS LEVEL
B BIAS LEVEL
MIX
IC600
IC601
IC602
R BKG CONT
G BKG CONT
B BKG CONT
IC614
IC609
DAC AND SW
DRV (B)
DRV (G)
DRV (R)
BRT
BIAS (R)
BIAS (G)
BIAS (B)
CONT
PIC (3/3)
PR
SDI
CLK
LD
SDO
IC610
BUF
IC611
IC613
RESET
5V
LIMIT-R
LIMIT-G
LIMIT-B
IC2109

9-2

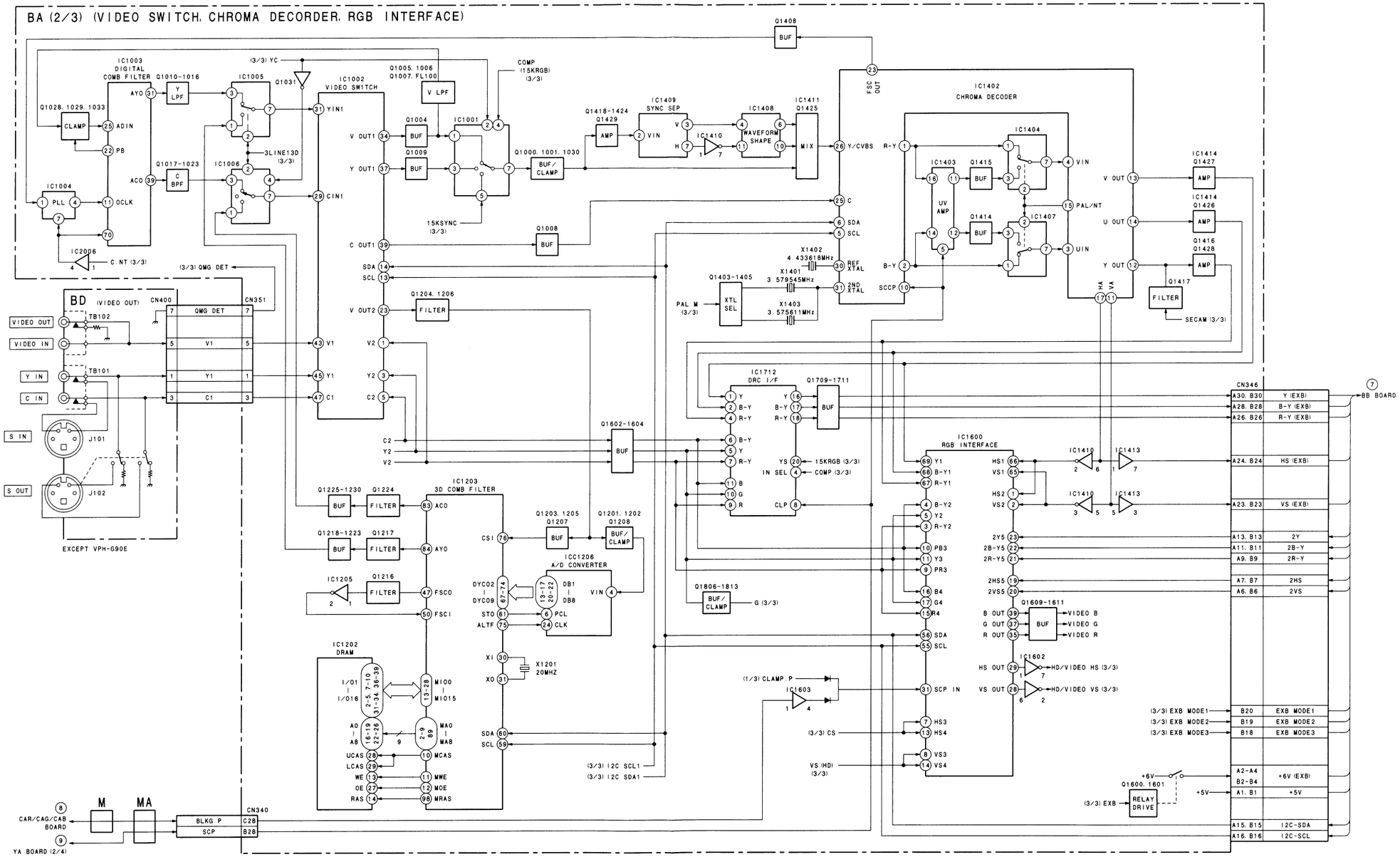
BA (2/3) (VIDEO SWITCH, CHROMA DECORDER, RGB INTERFACE)
IC1003 DIGITAL COMB FILTER
IC1002 VIDEO SWITCH
IC1402 CHROMA DECODER
IC1409 SYNC SEP
IC1408 WAVEFORM SHAPE
IC1411 Q1425 MIX
IC1712 DRC I/F
IC1600 RGB INTERFACE
IC1203 3D COMB FILTER
IC1202 DRAM
IC1206 A/D CONVERTER
BD (VIDEO OUT)
VIDEO OUT
VIDEO IN
Y IN
C IN
S IN
S OUT
EXCEPT VPH-G90E
CN346
BB BOARD
CN340
CAR/CAG/CAB BOARD
YA BOARD (2/4)

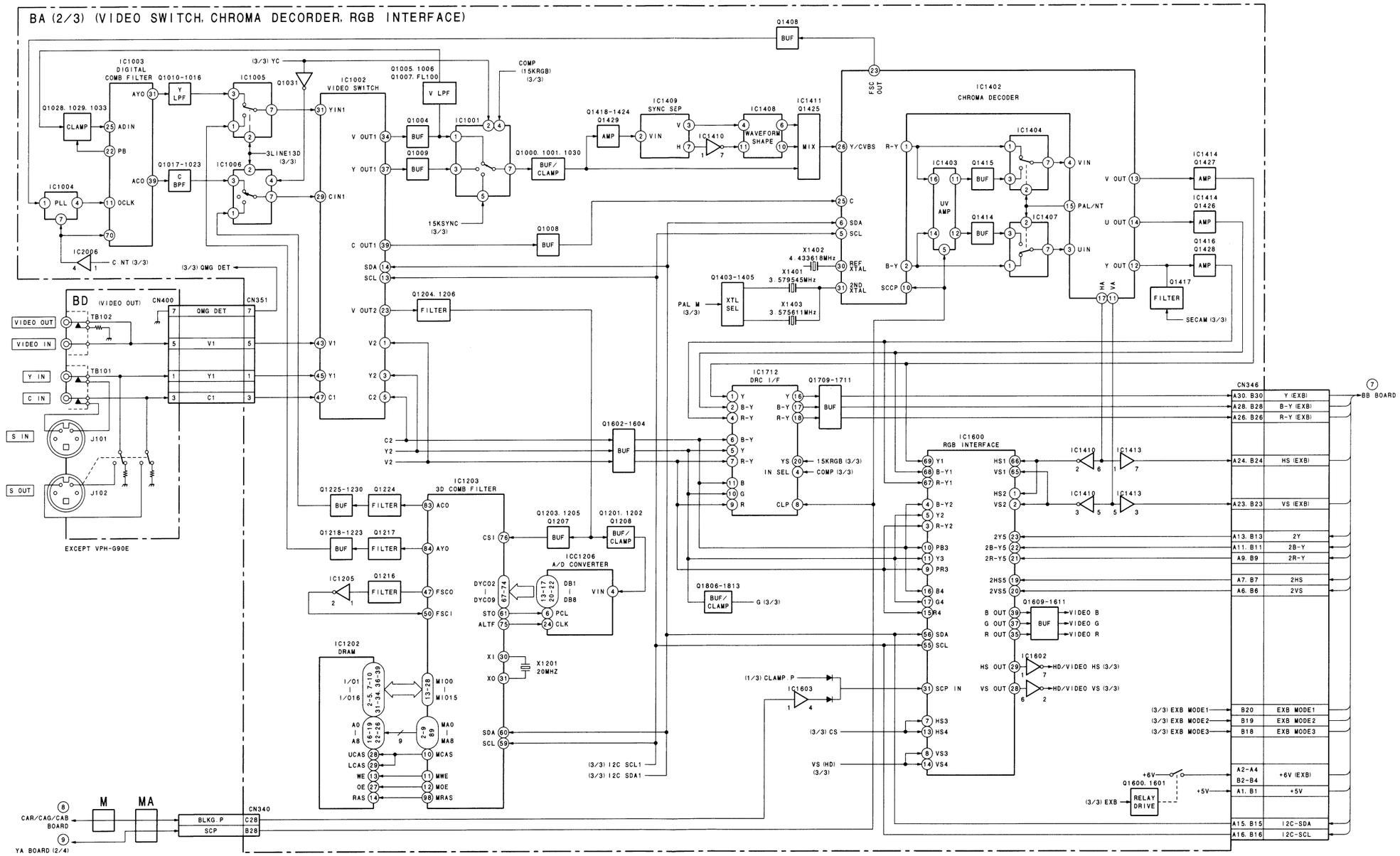
BA (2/3) (VIDEO SWITCH, CHROMA DECORDER, RGB INTERFACE)
IC1003 DIGITAL COMB FILTER
IC1002 VIDEO SWITCH
IC1402 CHROMA DECODER
IC1600 RGB INTERFACE
IC1203 3D COMB FILTER
IC1202 DRAM
IC1206 A/D CONVERTER
IC1712 DRC I/F
BD (VIDEO OUT)
EXCEPT VPH-G90E
CN346
CN340
CN400
CN351
BB BOARD
YA BOARD (2/4)
CAR/CAG/CAB BOARD

BA (3/3)

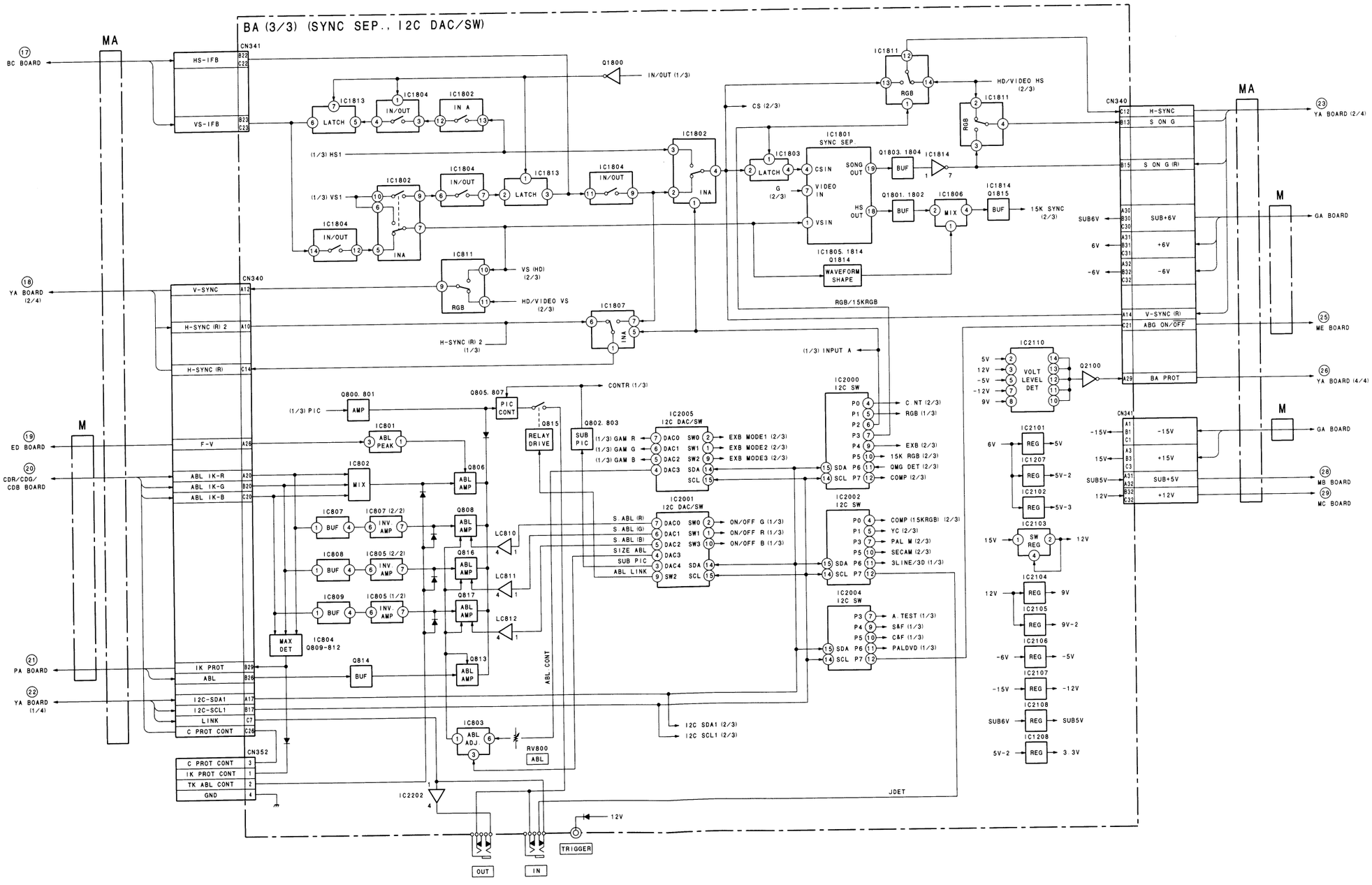
BA (3/3) (SYNC SEP., I2C DAC/SW)
MA
M
17 BC BOARD
18 YA BOARD (2/4)
19 ED BOARD
20 CDR/CDG/ CDB BOARD
21 PA BOARD
22 YA BOARD (1/4)
23 YA BOARD (2/4)
25 ME BOARD
26 YA BOARD (4/4)
GA BOARD
28 MB BOARD
29 MC BOARD
CN341
CN340
CN352
HS-IFB
VS-IFB
V-SYNC
H-SYNC (R) 2
H-SYNC (R)
F-V
ABL IK-R
ABL IK-G
ABL IK-B
IK PROT
ABL
I2C-SDA1
I2C-SCL1
LINK
C PROT CONT
C PROT CONT
IK PROT CONT
TK ABL CONT
GND
H-SYNC
S ON G
S ON G (R)
SUB+6V
+6V
-6V
V-SYNC (R)
ABG ON/OFF
BA PROT
-15V
+15V
SUB+5V
+12V
Q1800
IN/OUT (1/3)
IC1813
IC1804
IC1802
LATCH
IN/OUT
IN A
INA
(1/3) HS1
(1/3) VS1
IC811
RGB
VS (HD) (2/3)
HD/VIDEO VS (2/3)
IC1807
H-SYNC (R) 2 (1/3)
IC1811
HD/VIDEO HS (2/3)
CS (2/3)
IC1803
IC1801 SYNC SEP.
CSIN
VIDEO IN
VSIN
SONG OUT
HS OUT
G (2/3)
Q1803. 1804
BUF
IC1814
Q1801. 1802
IC1806
MIX
Q1815
15K SYNC (2/3)
IC1805. 1814 Q1814
WAVEFORM SHAPE
RGB/15KRGB
(1/3) INPUT A
IC2110
VOLT LEVEL DET
Q2100
5V
12V
-5V
-12V
9V
IC2101
IC1207
IC1202
IC2103
IC2104
IC2105
IC2106
IC2107
IC2108
IC1208
REG
SW REG
6V
15V
SUB6V
-6V
-15V
5V-2
5V-3
9V-2
3.3V
IC2000 I2C SW
C NT (2/3)
RGB (1/3)
IC2005 I2C DAC/SW
EXB MODE1 (2/3)
EXB MODE2 (2/3)
EXB MODE3 (2/3)
EXB (2/3)
15K RGB (2/3)
QMG DET (2/3)
COMP (2/3)
IC2001 I2C DAC/SW
ON/OFF G (1/3)
ON/OFF R (1/3)
ON/OFF B (1/3)
IC2002 I2C SW
COMP (15KRGB) (2/3)
YC (2/3)
PAL M (2/3)
SECAM (2/3)
3LINE/3D (1/3)
IC2004 I2C SW
A. TEST (1/3)
SAF (1/3)
CAF (1/3)
PALDVD (1/3)
I2C SDA1 (2/3)
I2C SCL1 (2/3)
CONTR (1/3)
Q800. 801
AMP
(1/3) PIC
IC801 ABL PEAK
Q805. 807
PIC CONT
Q815
RELAY DRIVE
Q802. 803
SUB PIC
(1/3) GAM R
(1/3) GAM G
(1/3) GAM B
IC802 MIX
Q806
ABL AMP
IC807
IC807 (2/2)
INV. AMP
Q808
LC810
IC808
IC808 (2/2)
Q816
LC811
IC809
IC809 (2/2)
Q817
LC812
MAX DET
IC804 Q809-812
Q814
Q813
ABL CONT
IC803 ABL ADJ
RV800 ABL
IC2202
JDET
12V
TRIGGER
OUT
IN

9-4

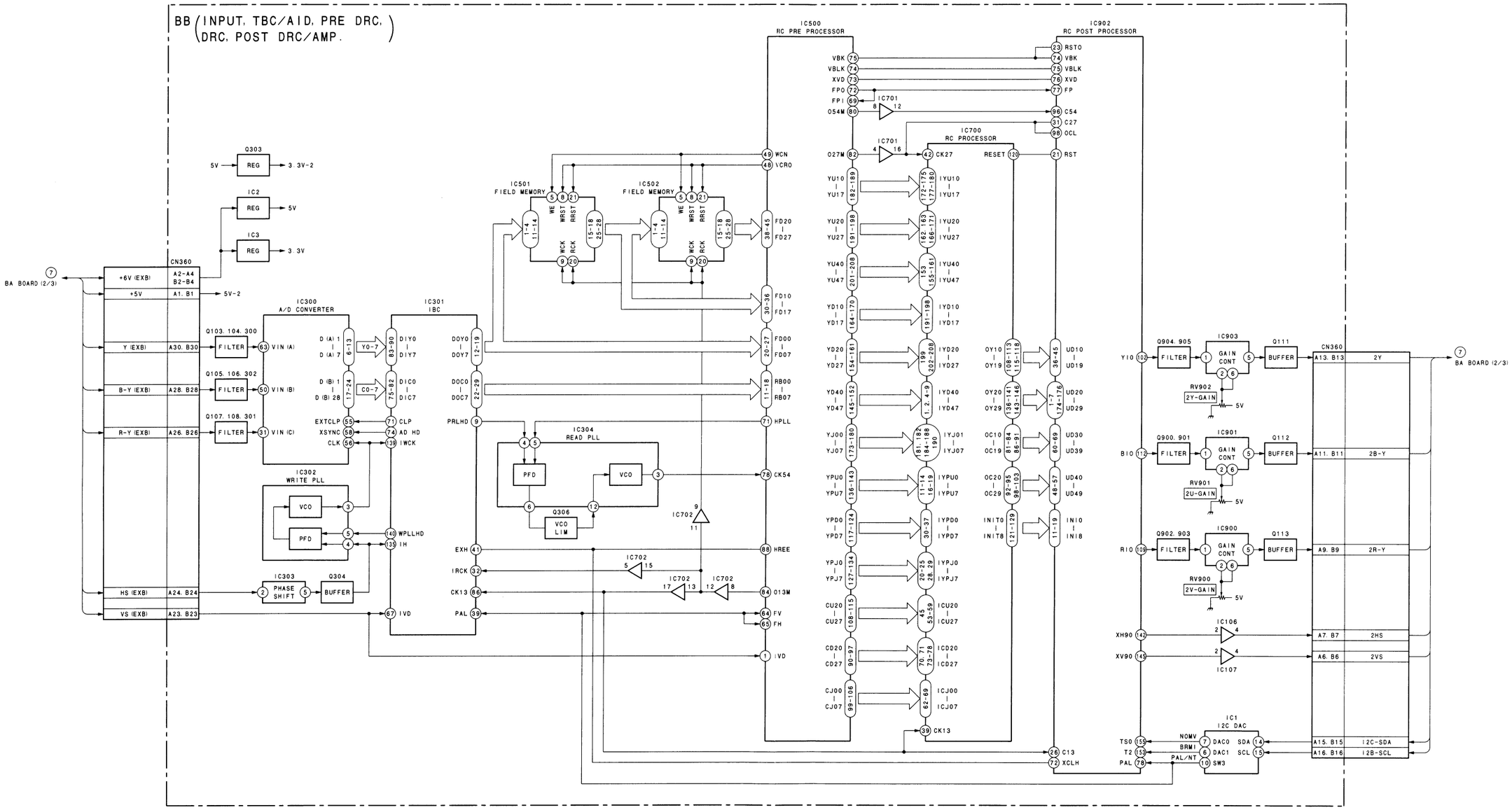
BB (INPUT, TBC/AID, PRE DRC, DRC, POST DRC/AMP.)
IC500 RC PRE PROCESSOR
IC902 RC POST PROCESSOR
IC700 RC PROCESSOR
IC501 FIELD MEMORY
IC502 FIELD MEMORY
IC300 A/D CONVERTER
IC301 IBC
IC302 WRITE PLL
IC304 READ PLL
IC303 PHASE SHIFT
IC903 GAIN CONT
IC901 GAIN CONT
IC900 GAIN CONT
IC1 I2C DAC
CN360
BA BOARD (2/3)
Q303 REG 3.3V-2
IC2 REG 5V
IC3 REG 3.3V
+6V (EXB) A2-A4 B2-B4
+5V A1, B1 5V-2
Y (EXB) A30, B30
B-Y (EXB) A28, B28
R-Y (EXB) A26, B26
HS (EXB) A24, B24
VS (EXB) A23, B23
Q103, 104, 300 FILTER
Q105, 106, 302 FILTER
Q107, 108, 301 FILTER
Q306 VCO LIM
Q304 BUFFER
Q904, 905 FILTER
Q900, 901 FILTER
Q902, 903 FILTER
Q111 BUFFER
Q112 BUFFER
Q113 BUFFER
RV902 2Y-GAIN
RV901 2U-GAIN
RV900 2V-GAIN
IC106
IC107
A13, B13 2Y
A11, B11 2B-Y
A9, B9 2R-Y
A7, B7 2HS
A6, B6 2VS
A15, B15 I2C-SDA
A16, B16 I2B-SCL

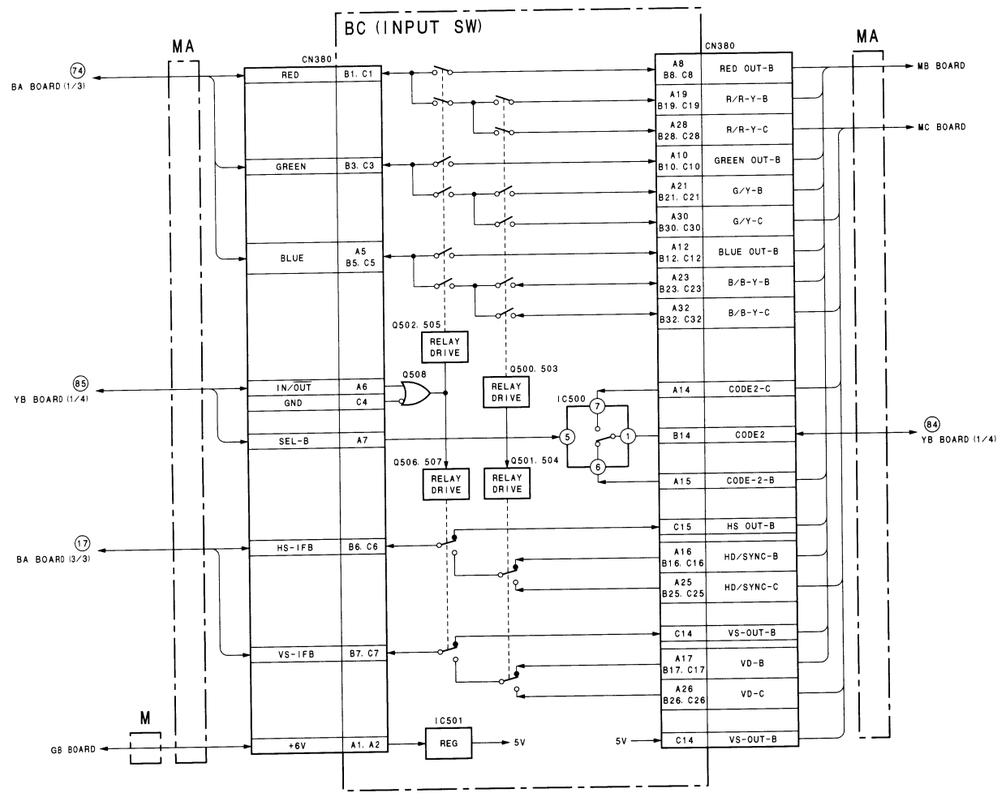
BC (INPUT SW)
MA
CN380
74
BA BOARD (1/3)
RED
B1. C1
GREEN
B3. C3
BLUE
A5
B5. C5
Q502. 505
RELAY DRIVE
Q500. 503
Q508
85
YB BOARD (1/4)
IN/OUT
A6
GND
C4
SEL-B
A7
IC500
Q506. 507
Q501. 504
17
BA BOARD (3/3)
HS-IFB
B6. C6
VS-IFB
B7. C7
M
GB BOARD
+6V
A1. A2
IC501
REG
5V
A8
B8. C8
RED OUT-B
A19
B19. C19
R/R-Y-B
A28
B28. C28
R/R-Y-C
A10
B10. C10
GREEN OUT-B
A21
B21. C21
G/Y-B
A30
B30. C30
G/Y-C
A12
B12. C12
BLUE OUT-B
A23
B23. C23
B/B-Y-B
A32
B32. C32
B/B-Y-C
A14
CODE2-C
B14
CODE2
A15
CODE-2-B
C15
HS OUT-B
A16
B16. C16
HD/SYNC-B
A25
B25. C25
HD/SYNC-C
C14
VS-OUT-B
A17
B17. C17
VD-B
A26
B26. C26
VD-C
C14
VS-OUT-B
MB BOARD
MC BOARD
84
YB BOARD (1/4)

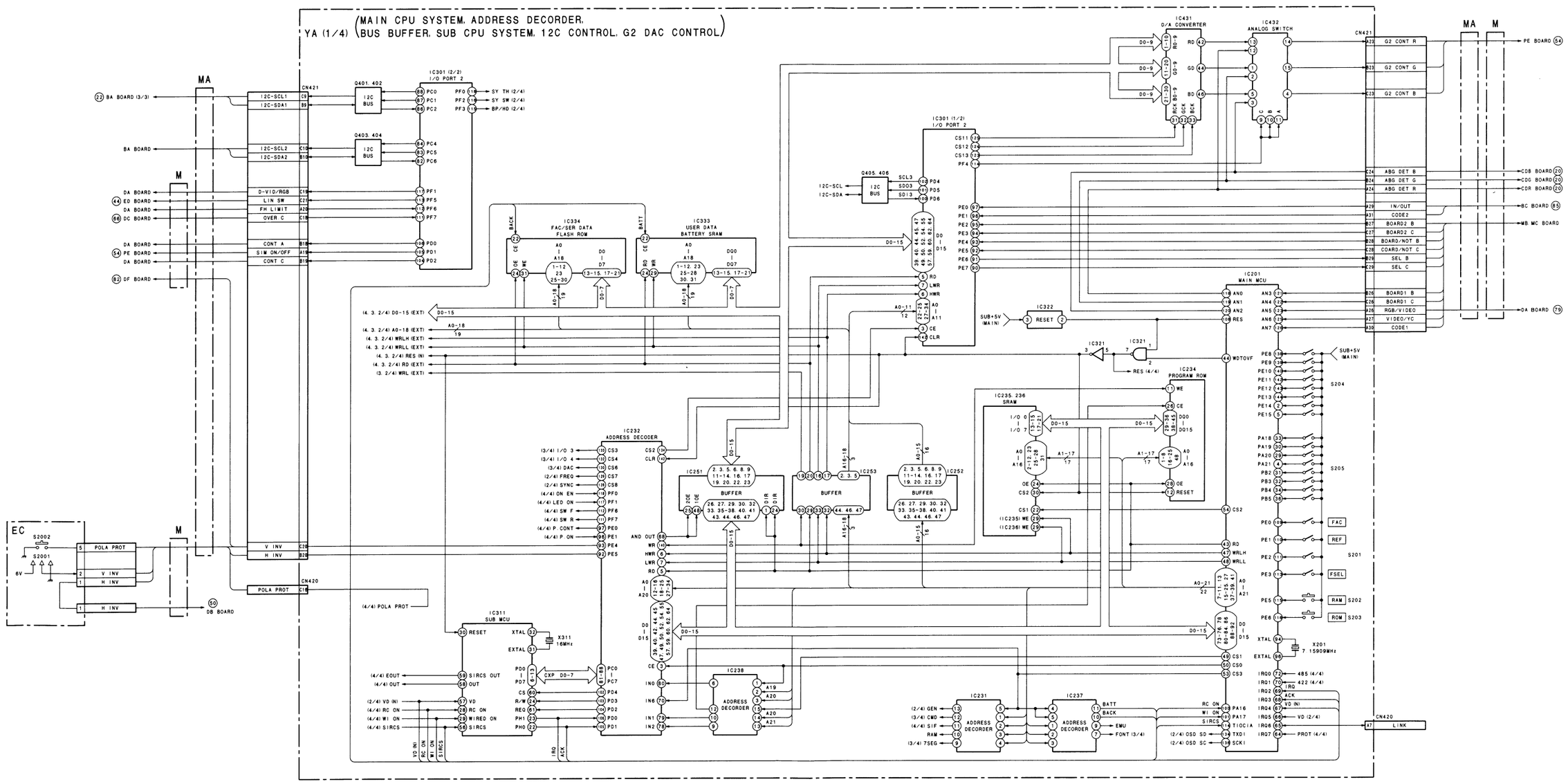
YA (1/4)
(MAIN CPU SYSTEM, ADDRESS DECORDER, BUS BUFFER, SUB CPU SYSTEM, 12C CONTROL, G2 DAC CONTROL)
IC301 (2/2) I/O PORT 2
IC301 (1/2) I/O PORT 2
IC431 D/A CONVERTER
IC432 ANALOG SWITCH
CN421
IC334 FAC/SER DATA FLASH ROM
IC333 USER DATA BATTERY SRAM
IC201 MAIN MCU
IC322 RESET
IC321
IC234 PROGRAM ROM
IC235, 236 SRAM
IC232 ADDRESS DECODER
IC251 BUFFER
IC253 BUFFER
IC252 BUFFER
IC311 SUB MCU
X311 16MHz
X201 7.15909MHz
IC238 ADDRESS DECORDER
IC231 ADDRESS DECORDER
IC237 ADDRESS DECORDER
CN420
EC
S2002
S2001
6V
POLA PROT
V INV
H INV
DB BOARD
BA BOARD (3/3)
BA BOARD
DA BOARD
ED BOARD
DC BOARD
PE BOARD
DF BOARD
D-VID/RGB
LIN SW
FH LIMIT
OVER C
CONT A
SIM ON/OFF
CONT C
SY TH (2/4)
SY SW (2/4)
BP/HD (2/4)
G2 CONT R
G2 CONT G
G2 CONT B
ABG DET B
ABG DET G
ABG DET R
IN/OUT
CODE2
BOARD2 B
BOARD2 C
BOARD/NOT B
COARD/NOT C
SEL B
SEL C
BOARD1 B
BOARD1 C
RGB/VIDEO
VIDEO/YC
CODE1
CDB BOARD
CDG BOARD
CDR BOARD
BC BOARD
MB MC BOARD
DA BOARD
LINK
S204
S205
S201
S202
S203
FAC
REF
FSEL
RAM
ROM
SUB+5V (MAIN)
(4/4) POLA PROT
(4/4) EOUT
(4/4) OUT
(2/4) VD (N)
(4/4) RC ON
(4/4) WI ON
(4/4) SIRCS
(2/4) GEN
(3/4) CMD
(4/4) SIF
RAM
(3/4) 7SEG
(2/4) OSD SD
(2/4) OSD SC
EMU
FONT (3/4)
485 (4/4)
422 (4/4)
VD (2/4)
PROT (4/4)

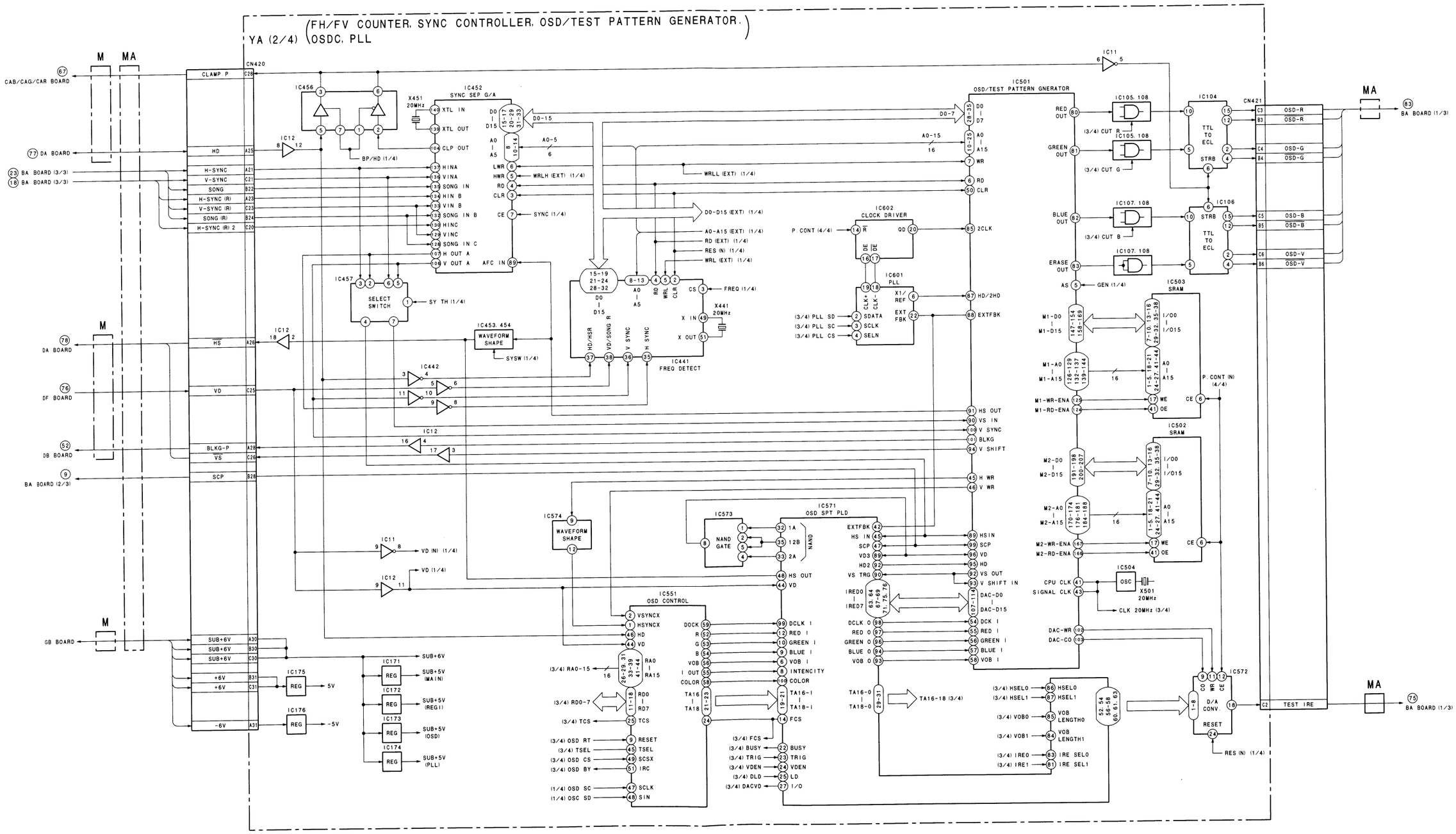
YA (2/4)
(FH/FV COUNTER, SYNC CONTROLLER, OSD/TEST PATTERN GENERATOR, OSDC, PLL)
CN420
CN421
IC452 SYNC SEP G/A
IC501 OSD/TEST PATTERN GNERATOR
IC602 CLOCK DRIVER
IC601 PLL
IC441 FREQ DETECT
IC453, 454 WAVEFORM SHAPE
IC457 SELECT SWITCH
IC456
IC12
IC11
IC105, 108
IC107, 108
IC104
IC106
IC503 SRAM
IC502 SRAM
IC504
IC571 OSD SPT PLD
IC573 NAND GATE
IC574 WAVEFORM SHAPE
IC551 OSD CONTROL
IC171
IC172
IC173
IC174
IC175
IC176
IC572
CAB/CAG/CAR BOARD
DA BOARD
BA BOARD (3/3)
DF BOARD
DB BOARD
BA BOARD (2/3)
GB BOARD
BA BOARD (1/3)
TEST IRE
RES (N) (1/4)

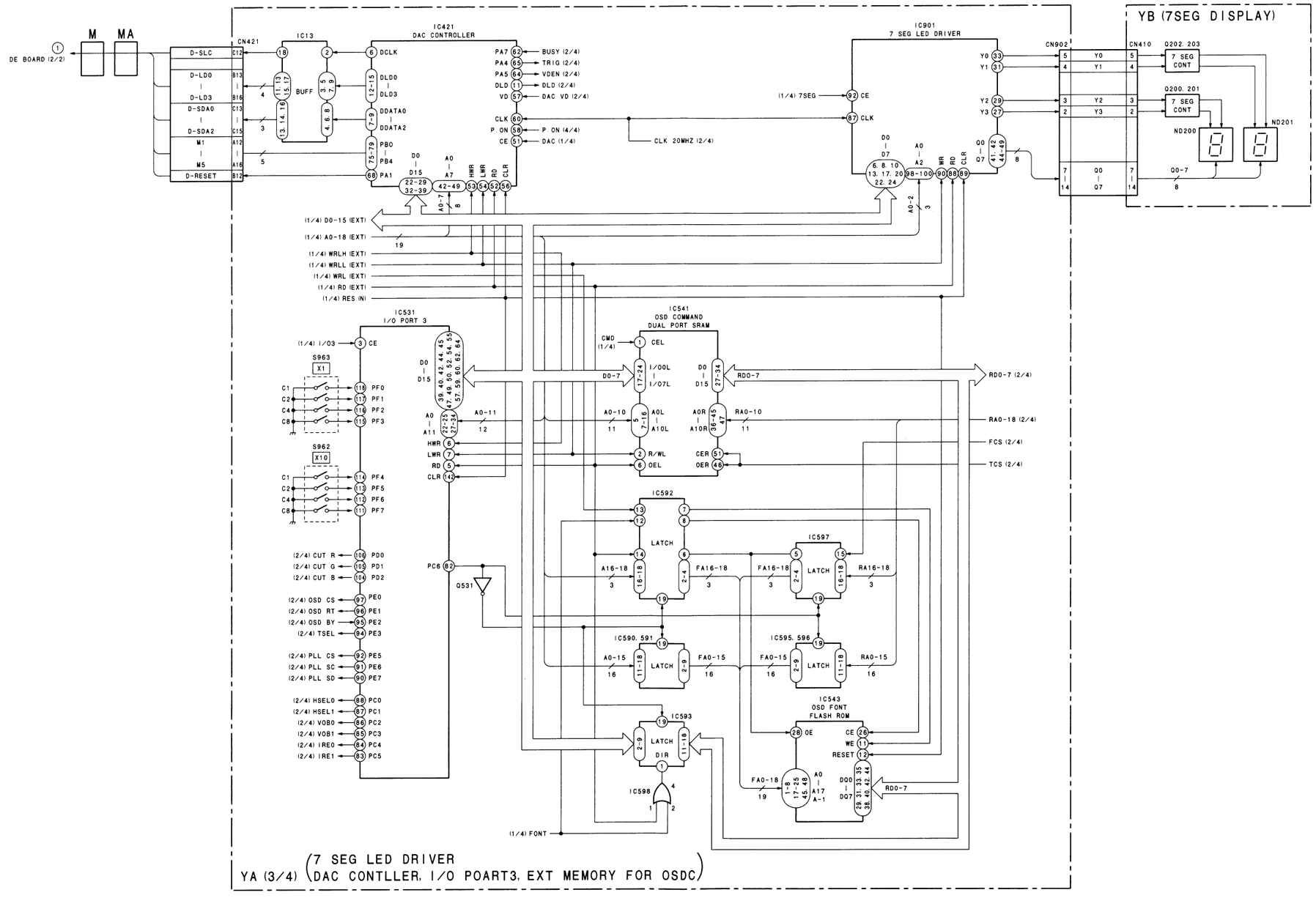

YA (3/4) (7 SEG LED DRIVER
DAC CONTLLER, I/O POART3, EXT MEMORY FOR OSDC)

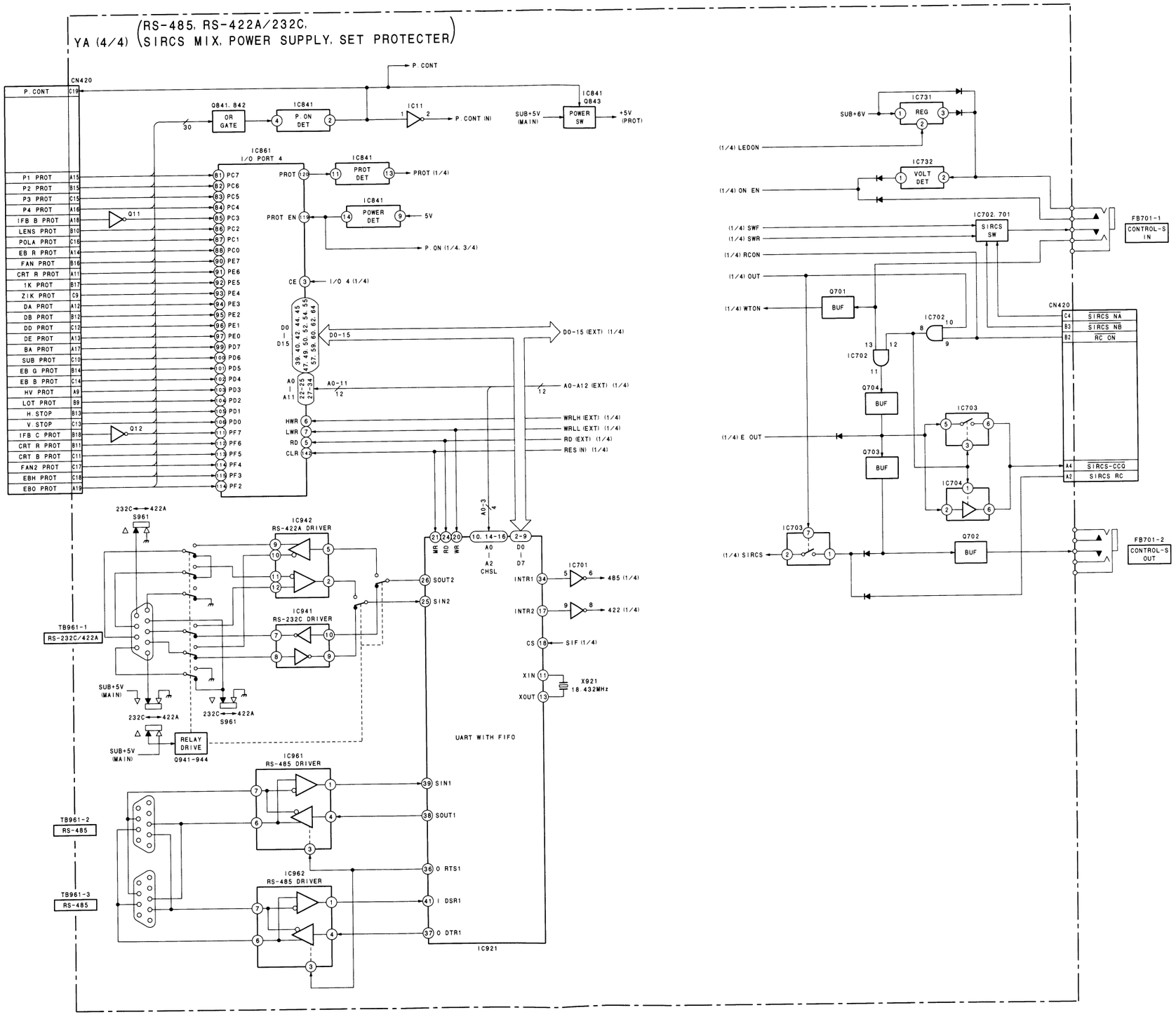
YA (4/4)
(RS-485, RS-422A/232C, SIRCS MIX, POWER SUPPLY, SET PROTECTER)
CN420
P. CONT
IC841 Q843
POWER SW
SUB+5V (MAIN)
+5V (PROT)
Q841, 842
OR GATE
IC841
P. ON DET
IC11
P. CONT (IN)
IC861
I/O PORT 4
PROT
PROT DET
PROT (1/4)
PROT EN
POWER DET
5V
P. ON (1/4, 3/4)
CE
I/O 4 (1/4)
D0-15
D0-15 (EXT) (1/4)
A0-11
A0-A12 (EXT) (1/4)
HWR
LWR
RD
CLR
WRLH (EXT) (1/4)
WRLL (EXT) (1/4)
RD (EXT) (1/4)
RES (IN) (1/4)
P1 PROT
P2 PROT
P3 PROT
P4 PROT
IFB B PROT
LENS PROT
POLA PROT
EB R PROT
FAN PROT
CRT R PROT
1K PROT
ZIK PROT
DA PROT
DB PROT
DD PROT
DE PROT
BA PROT
SUB PROT
EB G PROT
EB B PROT
HV PROT
LOT PROT
H. STOP
V. STOP
IFB C PROT
CRT R PROT
CRT B PROT
FAN2 PROT
EBH PROT
EBO PROT
Q11
Q12
232C ⇄ 422A
S961
IC942
RS-422A DRIVER
IC941
RS-232C DRIVER
TB961-1
RS-232C/422A
SUB+5V (MAIN)
RELAY DRIVE
Q941-944
IC961
RS-485 DRIVER
IC962
RS-485 DRIVER
TB961-2
RS-485
TB961-3
RS-485
SOUT2
SIN2
SIN1
SOUT1
O RTS1
I DSR1
O DTR1
UART WITH FIFO
IC921
INTR1
INTR2
CS
XIN
XOUT
IC701
485 (1/4)
422 (1/4)
SIF (1/4)
X921
18.432MHz
IC731
REG
SUB+6V
(1/4) LEDON
IC732
VOLT DET
(1/4) ON EN
IC702, 701
SIRCS SW
(1/4) SWF
(1/4) SWR
(1/4) RCON
(1/4) OUT
(1/4) WTON
Q701
BUF
IC702
Q704
IC703
IC704
Q703
(1/4) E OUT
Q702
(1/4) SIRCS
FB701-1
CONTROL-S IN
FB701-2
CONTROL-S OUT
SIRCS NA
SIRCS NB
RC ON
SIRCS-CCO
SIRCS RC

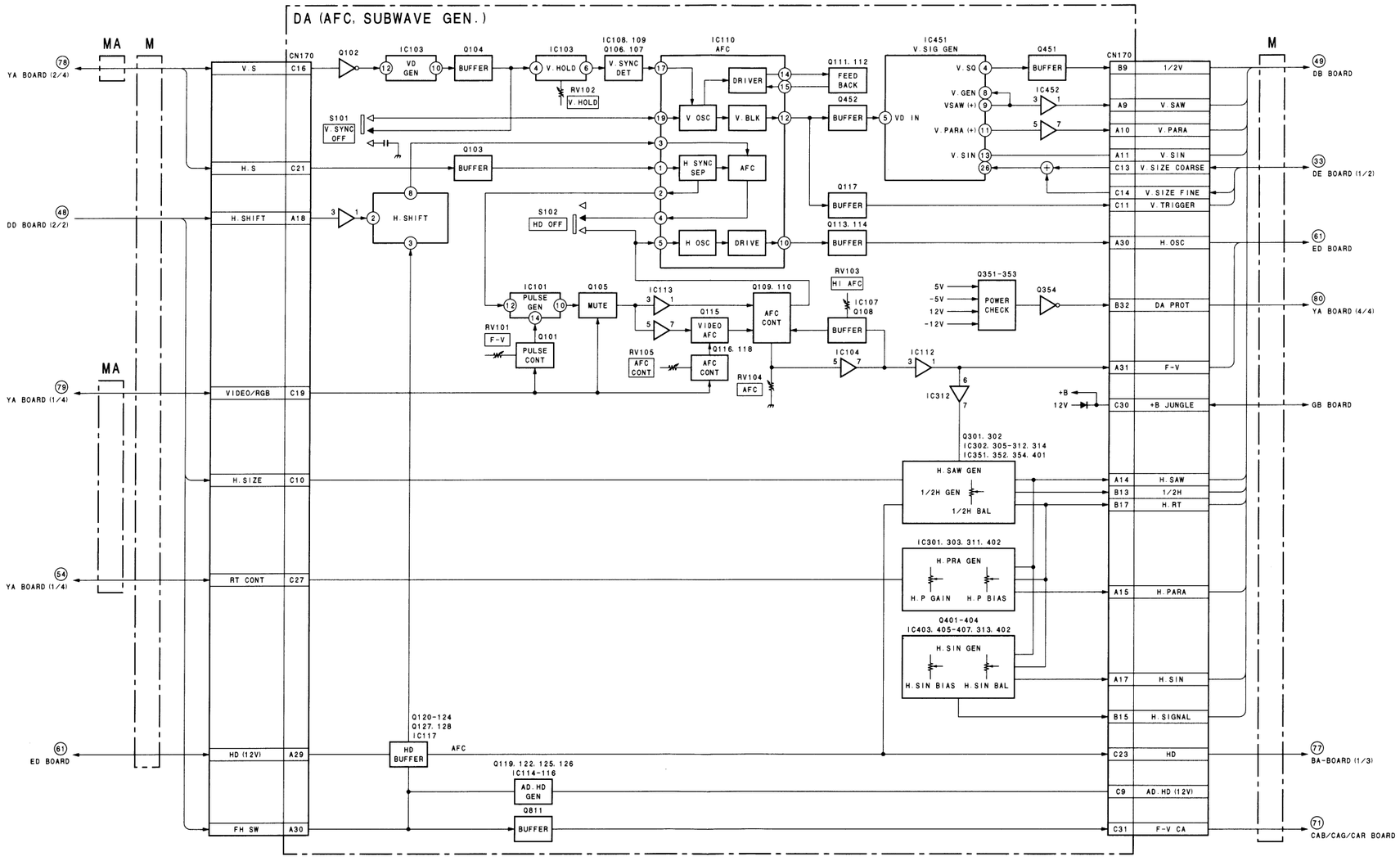
DA (AFC, SUBWAVE GEN.)
MA
M
78
YA BOARD (2/4)
48
DD BOARD (2/2)
79
YA BOARD (1/4)
54
YA BOARD (1/4)
61
ED BOARD
CN170
V.S
C16
H.S
C21
H.SHIFT
A18
VIDEO/RGB
C19
H.SIZE
C10
RT CONT
C27
HD (12V)
A29
FH SW
A30
Q102
IC103
VD GEN
Q104
BUFFER
IC103
V.HOLD
RV102
V.HOLD
IC108, 109
Q106, 107
V.SYNC DET
IC110
AFC
S101
V.SYNC OFF
Q103
BUFFER
H.SHIFT
DRIVER
V OSC
V.BLK
H SYNC SEP
AFC
S102
HD OFF
H OSC
DRIVE
Q111, 112
FEED BACK
Q452
BUFFER
VD IN
Q117
BUFFER
Q113, 114
BUFFER
IC451
V.SIG GEN
V.SQ
V.GEN
VSAW (+)
V.PARA (+)
V.SIN
Q451
BUFFER
IC452
CN170
B9
1/2V
A9
V.SAW
A10
V.PARA
A11
V.SIN
C13
V.SIZE COARSE
C14
V.SIZE FINE
C11
V.TRIGGER
A30
H.OSC
B32
DA PROT
A31
F-V
C30
+B JUNGLE
49
DB BOARD
33
DE BOARD (1/2)
61
ED BOARD
80
YA BOARD (4/4)
GB BOARD
IC101
PULSE GEN
Q105
MUTE
IC113
Q115
VIDEO AFC
Q109, 110
AFC CONT
RV101
F-V
Q101
PULSE CONT
RV105
AFC CONT
Q116, 118
AFC CONT
RV104
AFC
RV103
HI AFC
IC107
Q108
BUFFER
IC104
IC112
Q351-353
POWER CHECK
5V
-5V
12V
-12V
Q354
IC312
+B
12V
Q301, 302
IC302, 305-312, 314
IC351, 352, 354, 401
H.SAW GEN
1/2H GEN
1/2H BAL
IC301, 303, 311, 402
H.PRA GEN
H.P GAIN
H.P BIAS
Q401-404
IC403, 405-407, 313, 402
H.SIN GEN
H.SIN BIAS
H.SIN BAL
A14
H.SAW
B13
1/2H
B17
H.RT
A15
H.PARA
A17
H.SIN
B15
H.SIGNAL
C23
HD
C9
AD.HD (12V)
C31
F-V CA
Q120-124
Q127, 128
IC117
HD BUFFER
AFC
Q119, 122, 125, 126
IC114-116
AD.HD GEN
Q811
BUFFER
77
BA-BOARD (1/3)
71
CAB/CAG/CAR BOARD

9-11

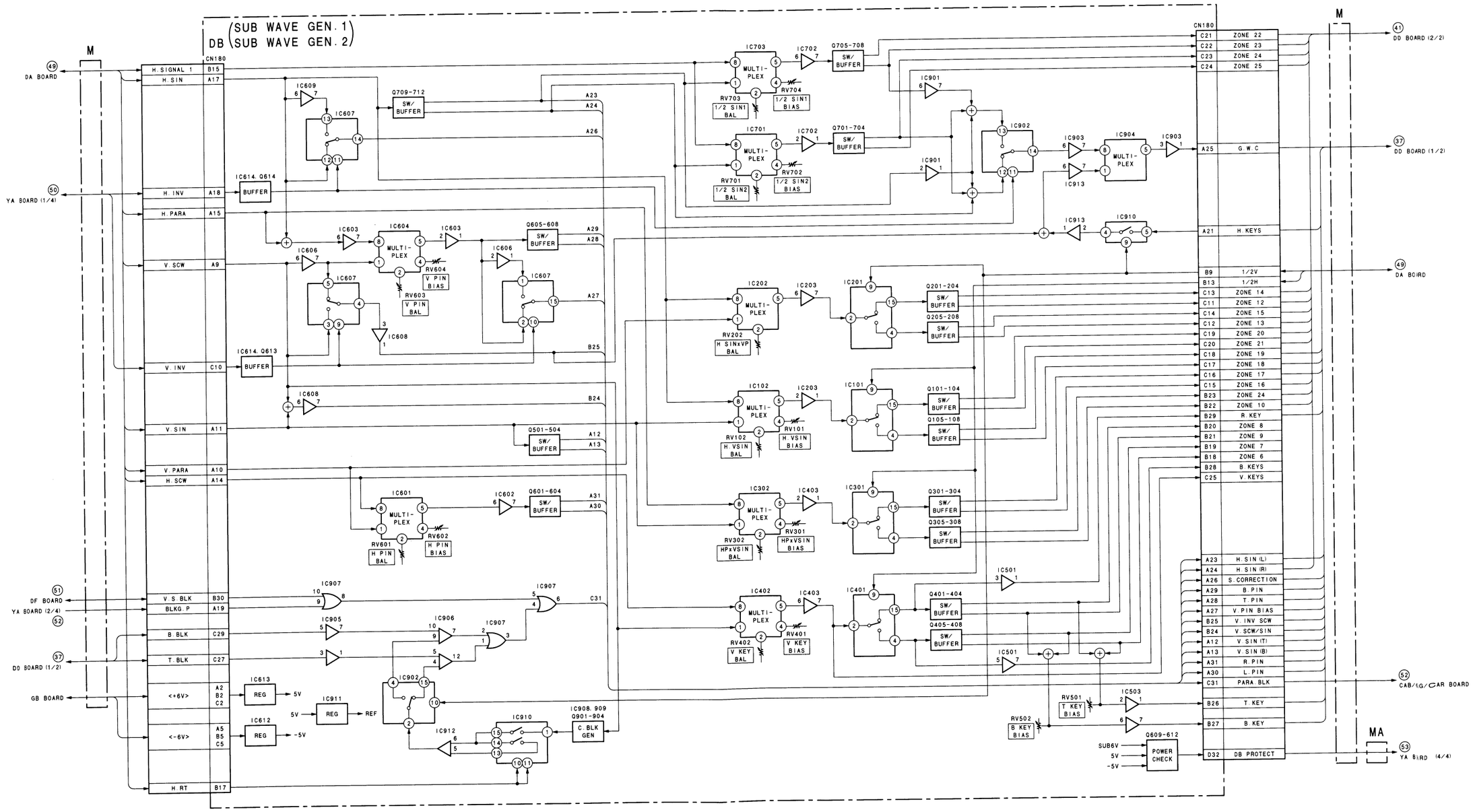
DB (SUB WAVE GEN. 1 / SUB WAVE GEN. 2)
M
49 DA BOARD
50 YA BOARD (1/4)
51 DF BOARD
YA BOARD (2/4)
52
37 DD BOARD (1/2)
GB BOARD
CN180
H. SIGNAL 1 B15
H. SIN A17
H. INV A18
H. PARA A15
V. SCW A9
V. INV C10
V. SIN A11
V. PARA A10
H. SCW A14
V. S. BLK B30
BLKG. P A19
B. BLK C29
T. BLK C27
<+6V> A2 B2 C2
<-6V> A5 B5 C5
H. RT B17
IC614. Q614 BUFFER
IC614. Q613 BUFFER
IC613 REG 5V
IC612 REG -5V
IC911 REG 5V REF
IC609
IC607
IC608
IC603
IC604
IC606
IC601
IC602
IC605
IC907
IC905
IC906
IC902
IC912
IC910
IC908. 909
Q901-904
C. BLK GEN
Q709-712 SW/ BUFFER
Q605-608 SW/ BUFFER
Q501-504 SW/ BUFFER
Q601-604 SW/ BUFFER
MULTI-PLEX
RV604 V PIN BIAS
RV603 V PIN BAL
RV601 H PIN BAL
RV602 H PIN BIAS
A23 A24 A26 A29 A28 A27 B25 B24 A12 A13 A31 A30 C31
IC703 IC702 Q705-708 SW/ BUFFER
RV703 1/2 SIN1 BAL
RV704 1/2 SIN1 BIAS
IC701 IC702 Q701-704 SW/ BUFFER
RV701 1/2 SIN2 BAL
RV702 1/2 SIN2 BIAS
IC901 IC902 IC903 IC904 IC913 IC910
IC202 IC203 IC201 Q201-204 SW/ BUFFER Q205-208 SW/ BUFFER
RV202 H SINxVP BAL
IC102 IC203 IC101 Q101-104 SW/ BUFFER Q105-108 SW/ BUFFER
RV102 H. VSIN BAL
RV101 H. VSIN BIAS
IC302 IC403 IC301 Q301-304 SW/ BUFFER Q305-308 SW/ BUFFER
RV302 HPxVSIN BAL
RV301 HPxVSIN BIAS
IC402 IC403 IC401 Q401-404 SW/ BUFFER Q405-408 SW/ BUFFER
RV402 V KEY BAL
RV401 V KEY BIAS
IC501
RV501 T KEY BIAS
RV502 B KEY BIAS
IC503
Q609-612 POWER CHECK
SUB6V 5V -5V
C21 ZONE 22
C22 ZONE 23
C23 ZONE 24
C24 ZONE 25
A25 G. W. C
A21 H. KEYS
B9 1/2V
B13 1/2H
C13 ZONE 14
C11 ZONE 12
C14 ZONE 15
C12 ZONE 13
C19 ZONE 20
C20 ZONE 21
C18 ZONE 19
C17 ZONE 18
C16 ZONE 17
C15 ZONE 16
B23 ZONE 24
B22 ZONE 10
B29 R. KEY
B20 ZONE 8
B21 ZONE 9
B19 ZONE 7
B18 ZONE 6
B28 B. KEYS
C25 V. KEYS
A23 H. SIN (L)
A24 H. SIN (R)
A26 S. CORRECTION
A29 B. PIN
A28 T. PIN
A27 V. PIN BIAS
B25 V. INV SCW
B24 V. SCW/SIN
A12 V. SIN (T)
A13 V. SIN (B)
A31 R. PIN
A30 L. PIN
C31 PARA. BLK
B26 T. KEY
B27 B. KEY
D32 DB PROTECT
41 DD BOARD (2/2)
37 DD BOARD (1/2)
49 DA BOARD
52 CAB/LG/CAR BOARD
MA
53 YA BOARD (4/4)

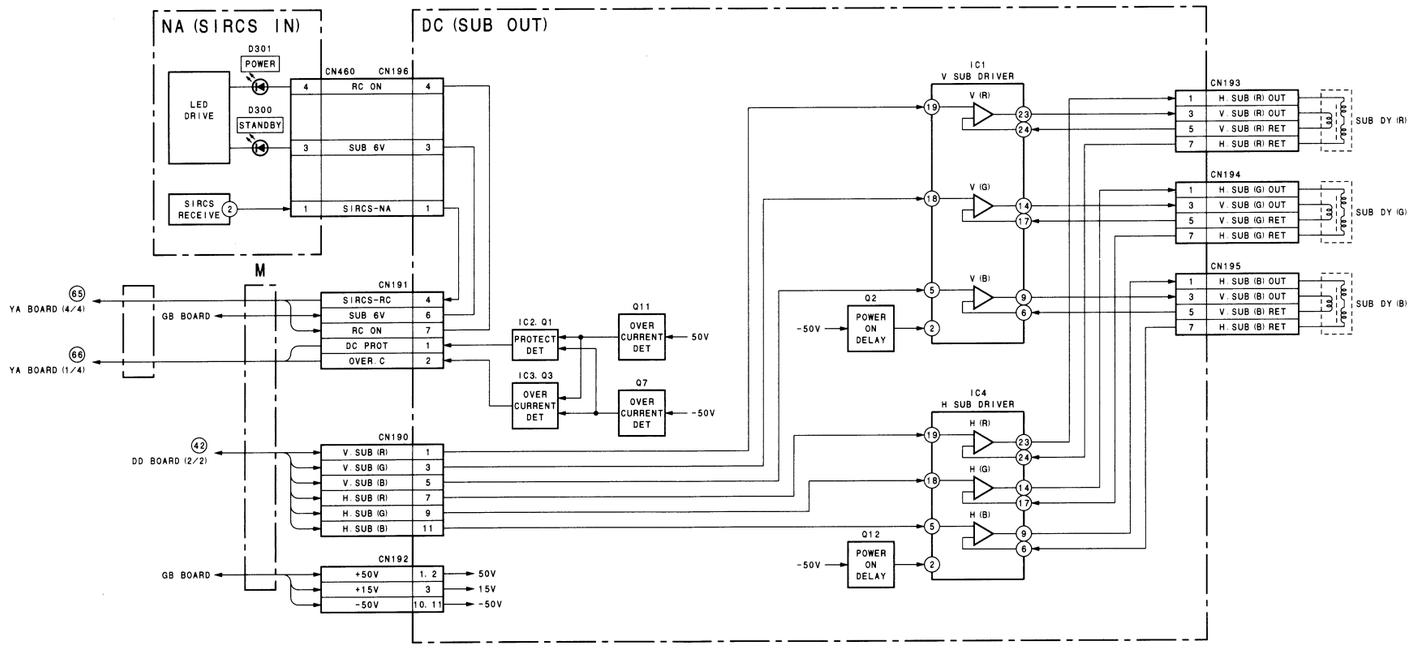
NA (SIRCS IN)
DC (SUB OUT)
D301
POWER
D300
STANDBY
LED DRIVE
SIRCS RECEIVE
CN460 CN196
RC ON
SUB 6V
SIRCS-NA
M
CN191
SIRCS-RC
SUB 6V
RC ON
DC PROT
OVER. C
YA BOARD (4/4)
YA BOARD (1/4)
GB BOARD
IC2, Q1
PROTECT DET
IC3, Q3
OVER CURRENT DET
Q11
Q7
50V
-50V
CN190
V. SUB (R)
V. SUB (G)
V. SUB (B)
H. SUB (R)
H. SUB (G)
H. SUB (B)
DD BOARD (2/2)
CN192
+50V
+15V
-50V
IC1
V SUB DRIVER
IC4
H SUB DRIVER
V (R)
V (G)
V (B)
H (R)
H (G)
H (B)
Q2
Q12
POWER ON DELAY
CN193
H. SUB (R) OUT
V. SUB (R) OUT
V. SUB (R) RET
H. SUB (R) RET
CN194
H. SUB (G) OUT
V. SUB (G) OUT
V. SUB (G) RET
H. SUB (G) RET
CN195
H. SUB (B) OUT
V. SUB (B) OUT
V. SUB (B) RET
H. SUB (B) RET
SUB DY (R)
SUB DY (G)
SUB DY (B)

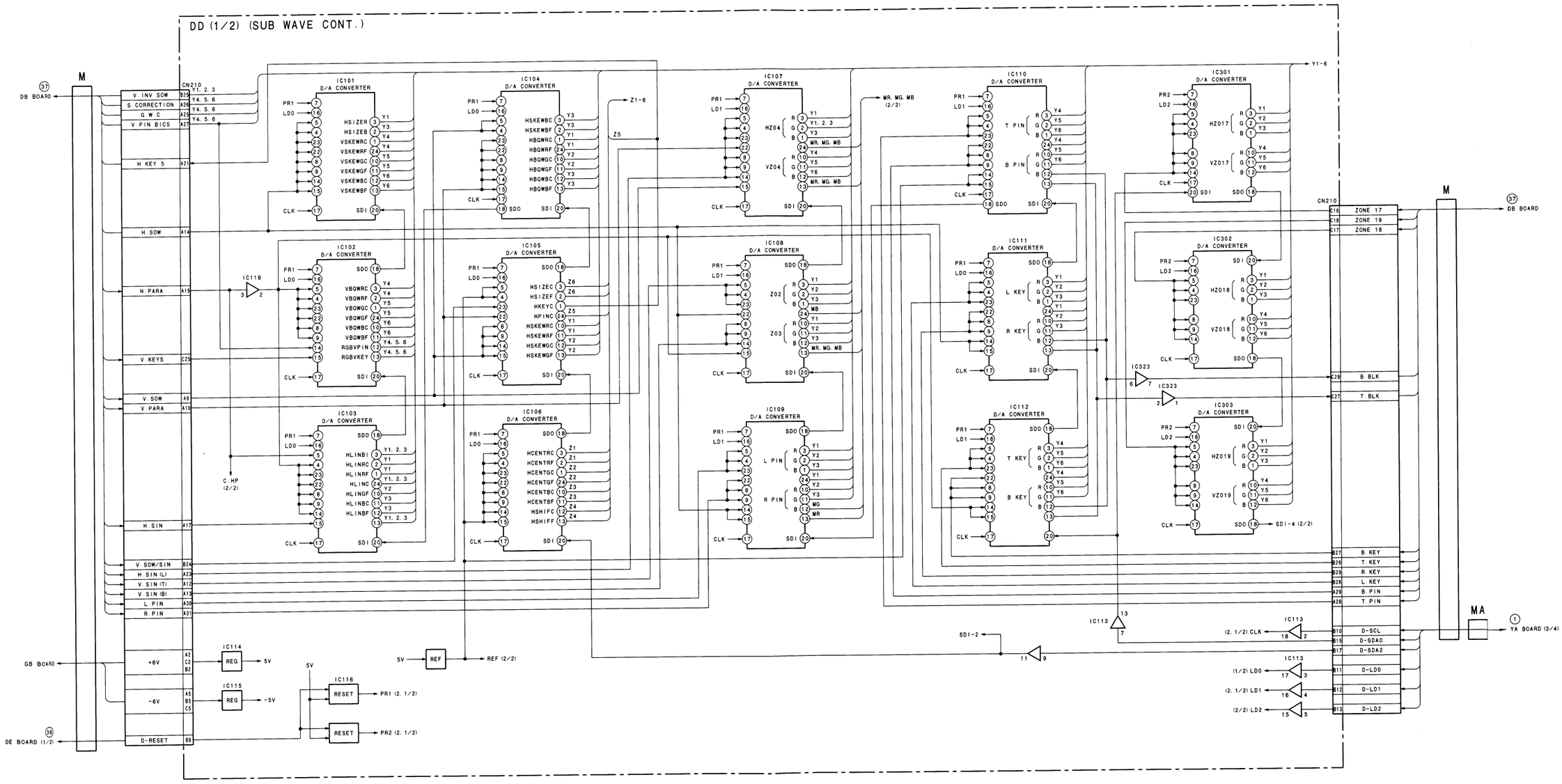
DD (1/2) (SUB WAVE CONT.)
DB BOARD
M
CN210
V. INV SOW
S. CORRECTION
G. W. C
V. PIN BICS
H. KEY 5
H. SOW
H. PARA
V. KEYS
V. SOW
V. PARA
H. SIN
V. SOW/SIN
H. SIN (L)
V. SIN (T)
V. SIN (B)
L. PIN
R. PIN
+6V
-6V
D-RESET
GB BOARD
DE BOARD (1/2)
IC101
IC102
IC103
IC104
IC105
IC106
IC107
IC108
IC109
IC110
IC111
IC112
IC301
IC302
IC303
D/A CONVERTER
IC118
IC114
IC115
IC116
IC113
IC323
REG
RESET
REF
ZONE 17
ZONE 19
ZONE 18
B. BLK
T. BLK
B. KEY
T. KEY
R. KEY
L. KEY
B. PIN
T. PIN
D-SCL
D-SDA0
D-SDA2
D-LD0
D-LD1
D-LD2
MA
YA BOARD (3/4)
C. HP (2/2)
REF (2/2)
PR1 (2, 1/2)
PR2 (2, 1/2)
(2, 1/2) CLK
(1/2) LD0
(2, 1/2) LD1
(2/2) LD2
SDI-2
SDI-4 (2/2)
MR. MG. MB (2/2)

DD (2/2)

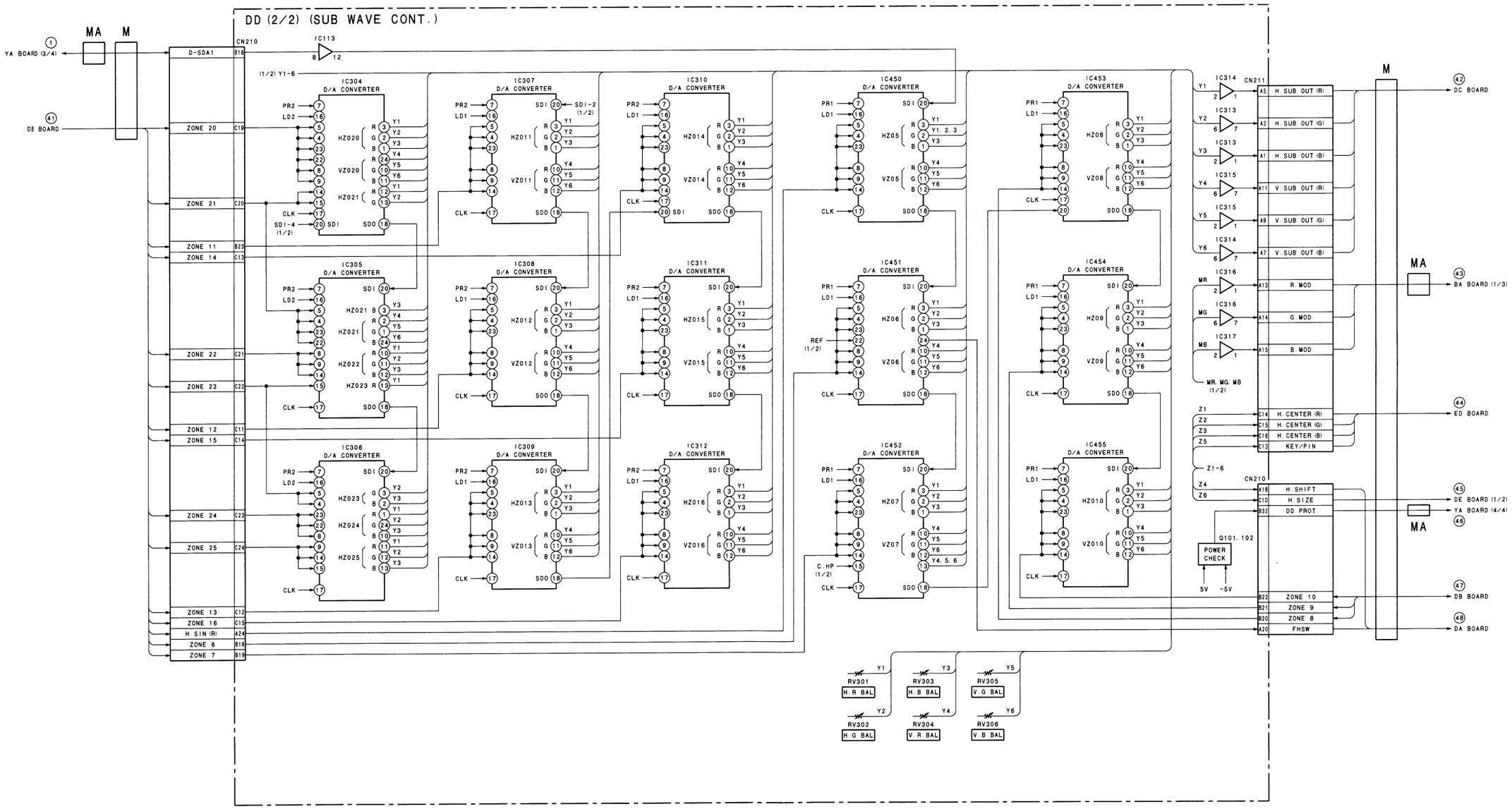
DD (2/2) (SUB WAVE CONT.)
YA BOARD (3/4)
DB BOARD
MA
M
CN210
D-SDA1
ZONE 20
ZONE 21
ZONE 11
ZONE 14
ZONE 22
ZONE 23
ZONE 12
ZONE 15
ZONE 24
ZONE 25
ZONE 13
ZONE 16
H.SIN (R)
ZONE 6
ZONE 7
IC113
IC304 D/A CONVERTER
IC305 D/A CONVERTER
IC306 D/A CONVERTER
IC307 D/A CONVERTER
IC308 D/A CONVERTER
IC309 D/A CONVERTER
IC310 D/A CONVERTER
IC311 D/A CONVERTER
IC312 D/A CONVERTER
IC450 D/A CONVERTER
IC451 D/A CONVERTER
IC452 D/A CONVERTER
IC453 D/A CONVERTER
IC454 D/A CONVERTER
IC455 D/A CONVERTER
IC314
IC313
IC315
IC316
IC317
CN211
H.SUB OUT (R)
H.SUB OUT (G)
H.SUB OUT (B)
V.SUB OUT (R)
V.SUB OUT (G)
V.SUB OUT (B)
R.MOD
G.MOD
B.MOD
MR, MG, MB (1/2)
H.CENTER (R)
H.CENTER (G)
H.CENTER (B)
KEY/PIN
H.SHIFT
H.SIZE
DD PROT
POWER CHECK
Q101, 102
5V
-5V
ZONE 10
ZONE 9
ZONE 8
FHSW
DC BOARD
BA BOARD (1/3)
ED BOARD
DE BOARD (1/2)
YA BOARD (4/4)
DB BOARD
DA BOARD
RV301 H.R BAL
RV302 H.G BAL
RV303 H.B BAL
RV304 V.R BAL
RV305 V.G BAL
RV306 V.B BAL

9-15

 DE (1/2)

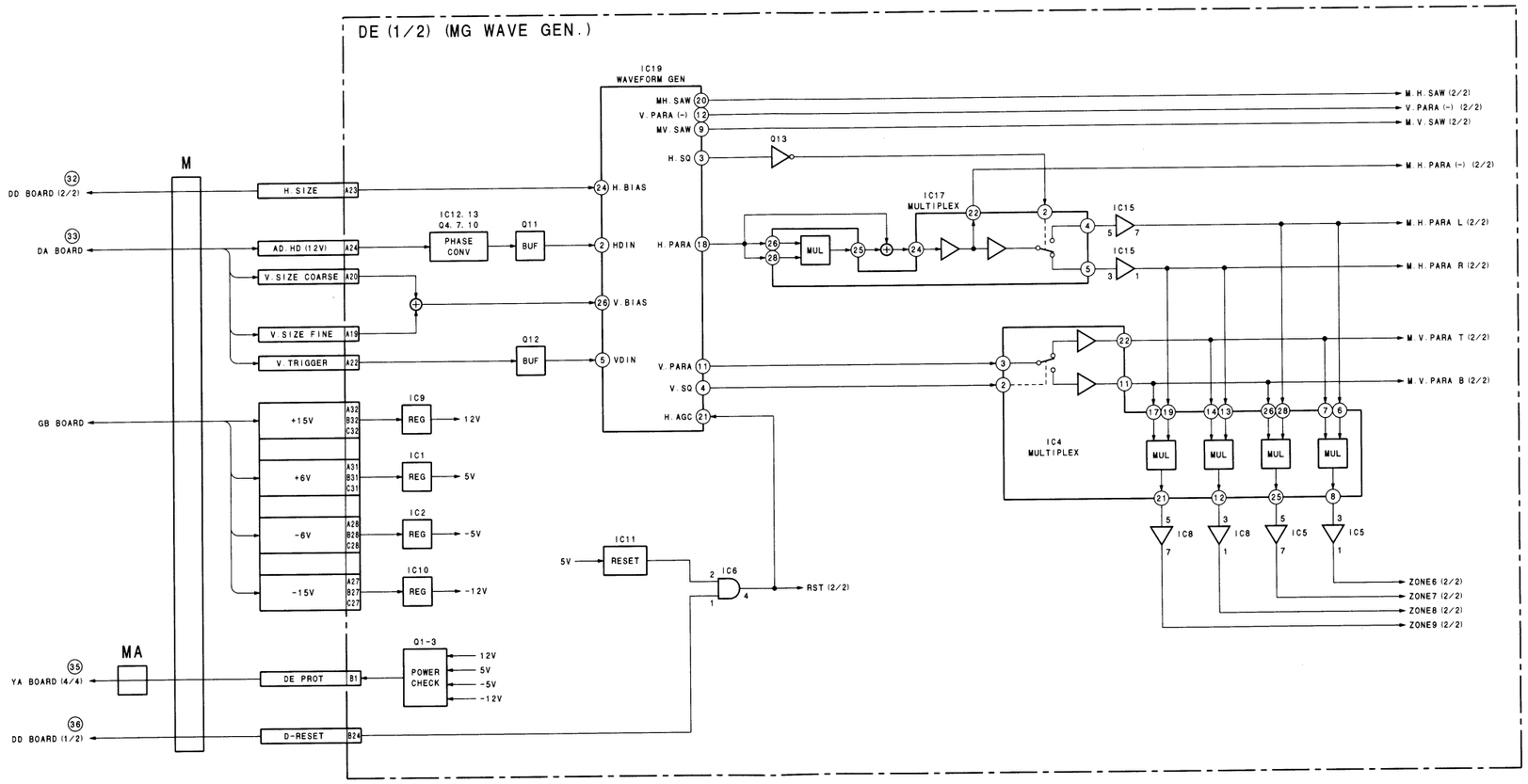
DE (1/2) (MG WAVE GEN.)
IC19
WAVEFORM GEN.
MH. SAW
V. PARA (-)
MV. SAW
H. SQ
H. PARA
V. PARA
V. SQ
H. AGC
H. BIAS
HDIN
V. BIAS
VDIN
M. H. SAW (2/2)
V. PARA (-) (2/2)
M. V. SAW (2/2)
M. H. PARA (-) (2/2)
M. H. PARA L (2/2)
M. H. PARA R (2/2)
M. V. PARA T (2/2)
M. V. PARA B (2/2)
Q13
IC17
MULTIPLEX
MUL
IC15
IC4
MULTIPLEX
IC8
IC5
ZONE6 (2/2)
ZONE7 (2/2)
ZONE8 (2/2)
ZONE9 (2/2)
M
MA
DD BOARD (2/2)
DA BOARD
GB BOARD
YA BOARD (4/4)
DD BOARD (1/2)
H. SIZE
AD. HD (12V)
V. SIZE COARSE
V. SIZE FINE
V. TRIGGER
+15V
+6V
-6V
-15V
DE PROT
D-RESET
IC12, 13
Q4, 7, 10
PHASE
CONV
Q11
BUF
Q12
BUF
IC9
IC1
IC2
IC10
REG
12V
5V
-5V
-12V
IC11
RESET
IC6
RST (2/2)
Q1-3
POWER
CHECK

 9-16

 DE (2/2)

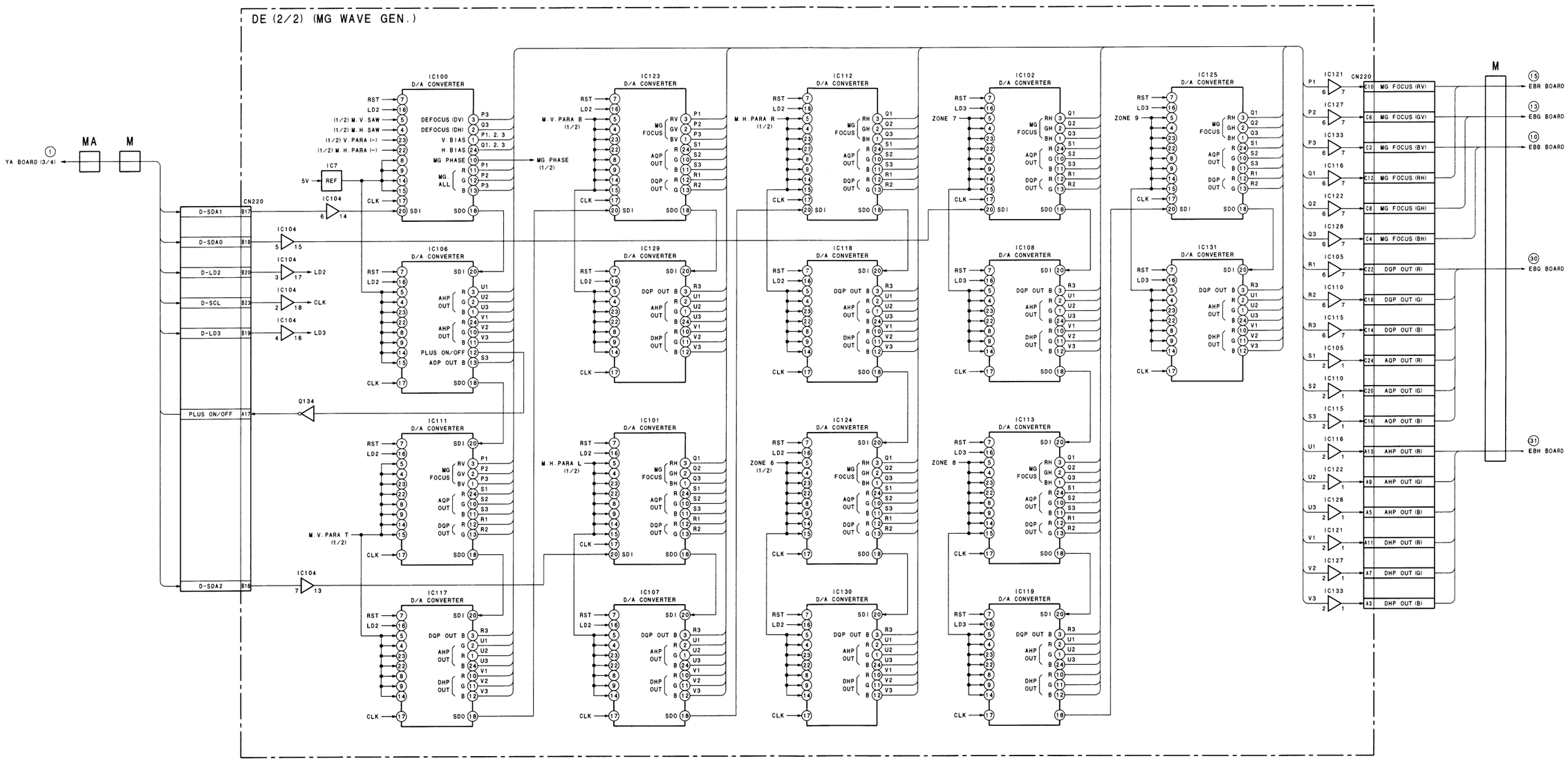
DE (2/2) (MG WAVE GEN.)
YA BOARD (3/4)
MA
M
CN220
D-SDA1
D-SDA0
D-LD2
D-SCL
D-LD3
PLUS ON/OFF
D-SDA2
IC100 D/A CONVERTER
IC106 D/A CONVERTER
IC111 D/A CONVERTER
IC117 D/A CONVERTER
IC123 D/A CONVERTER
IC129 D/A CONVERTER
IC101 D/A CONVERTER
IC107 D/A CONVERTER
IC112 D/A CONVERTER
IC118 D/A CONVERTER
IC124 D/A CONVERTER
IC130 D/A CONVERTER
IC102 D/A CONVERTER
IC108 D/A CONVERTER
IC113 D/A CONVERTER
IC119 D/A CONVERTER
IC125 D/A CONVERTER
IC131 D/A CONVERTER
MG PHASE
MG PHASE (1/2)
EBR BOARD
EBG BOARD
EBB BOARD
EBQ BOARD
EBH BOARD
MG FOCUS (RV)
MG FOCUS (GV)
MG FOCUS (BV)
MG FOCUS (RH)
MG FOCUS (GH)
MG FOCUS (BH)
DQP OUT (R)
DQP OUT (G)
DQP OUT (B)
AQP OUT (R)
AQP OUT (G)
AQP OUT (B)
AHP OUT (R)
AHP OUT (G)
AHP OUT (B)
DHP OUT (R)
DHP OUT (G)
DHP OUT (B)

 9-17

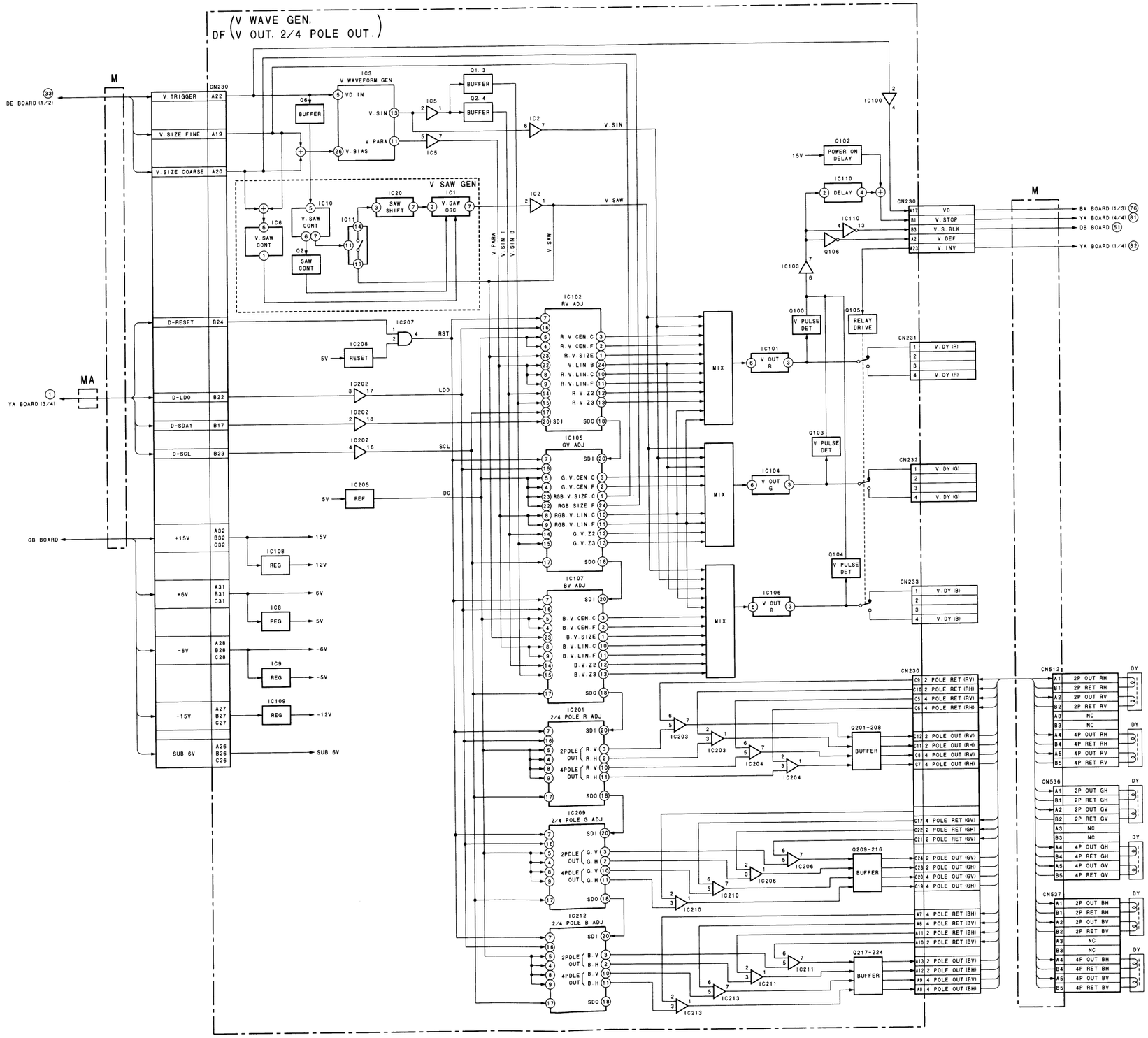
DF (V WAVE GEN. V OUT. 2/4 POLE OUT.)
V SAW GEN
IC3 V WAVEFORM GEN
IC1 V SAW OSC
IC20 SAW SHIFT
IC10 V SAW CONT
IC6 V SAW CONT
IC11
Q2 SAW CONT
Q6 BUFFER
Q1. 3 BUFFER
Q2. 4 BUFFER
IC5
IC2
IC100
Q102 POWER ON DELAY
IC110 DELAY
Q106
IC103
Q100 V PULSE DET
Q105 RELAY DRIVE
Q103 V PULSE DET
Q104 V PULSE DET
IC101 V OUT R
IC104 V OUT G
IC106 V OUT B
MIX
IC102 RV ADJ
IC105 GV ADJ
IC107 BV ADJ
IC201 2/4 POLE R ADJ
IC209 2/4 POLE G ADJ
IC212 2/4 POLE B ADJ
IC207
IC208 RESET
IC202
IC205 REF
IC108 REG
IC8 REG
IC9 REG
IC109 REG
Q201-208 BUFFER
Q209-216 BUFFER
Q217-224 BUFFER
IC203
IC204
IC206
IC210
IC211
IC213
CN230
CN231
CN232
CN233
CN512
CN536
CN537
V TRIGGER A22
V SIZE FINE A19
V SIZE COARSE A20
D-RESET B24
D-LDO B22
D-SDA1 B17
D-SCL B23
+15V A32 B32 C32
+6V A31 B31 C31
-6V A28 B28 C28
-15V A27 B27 C27
SUB 6V A26 B26 C26
VD
V STOP
V S BLK
V DEF
V INV
V DY (R)
V DY (G)
V DY (B)
2 POLE RET (RV)
2 POLE RET (RH)
4 POLE RET (RV)
4 POLE RET (RH)
2 POLE OUT (RV)
2 POLE OUT (RH)
4 POLE OUT (RV)
4 POLE OUT (RH)
4 POLE RET (GV)
2 POLE RET (GH)
2 POLE RET (GV)
2 POLE OUT (GV)
2 POLE OUT (GH)
4 POLE OUT (GV)
4 POLE OUT (GH)
4 POLE RET (BH)
4 POLE RET (BV)
2 POLE RET (BH)
2 POLE RET (BV)
2 POLE OUT (BV)
2 POLE OUT (BH)
4 POLE OUT (BV)
4 POLE OUT (BH)
2P OUT RH
2P RET RH
2P OUT RV
2P RET RV
4P OUT RH
4P RET RH
4P OUT RV
4P RET RV
2P OUT GH
2P RET GH
2P OUT GV
2P RET GV
2P OUT BH
2P RET BH
2P OUT BV
2P RET BV
NC
DY
M
MA
DE BOARD (1/2)
YA BOARD (3/4)
GB BOARD
BA BOARD (1/3)
YA BOARD (4/4)
DB BOARD
YA BOARD (1/4)

GA, GAA, GB, GBA, GBB, GC, F, ME, L

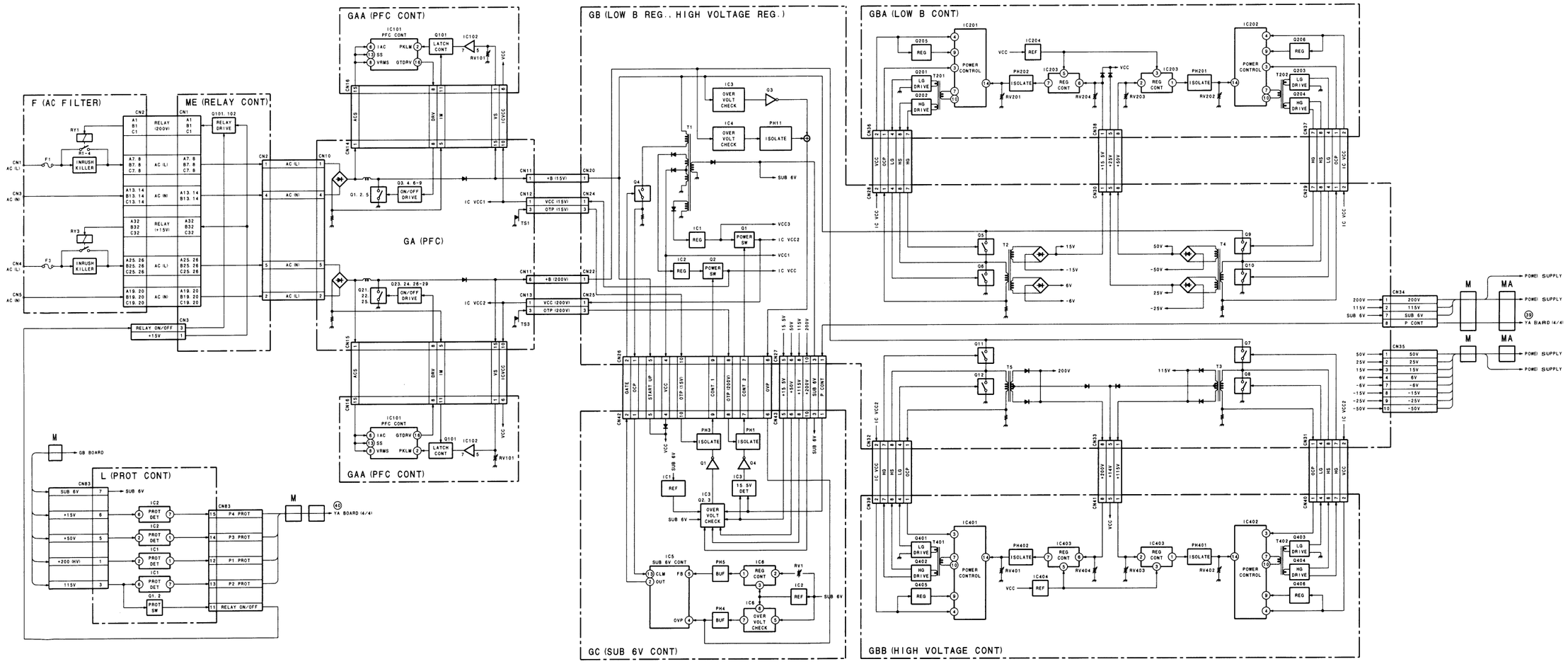

9-19

 E, EA, ED

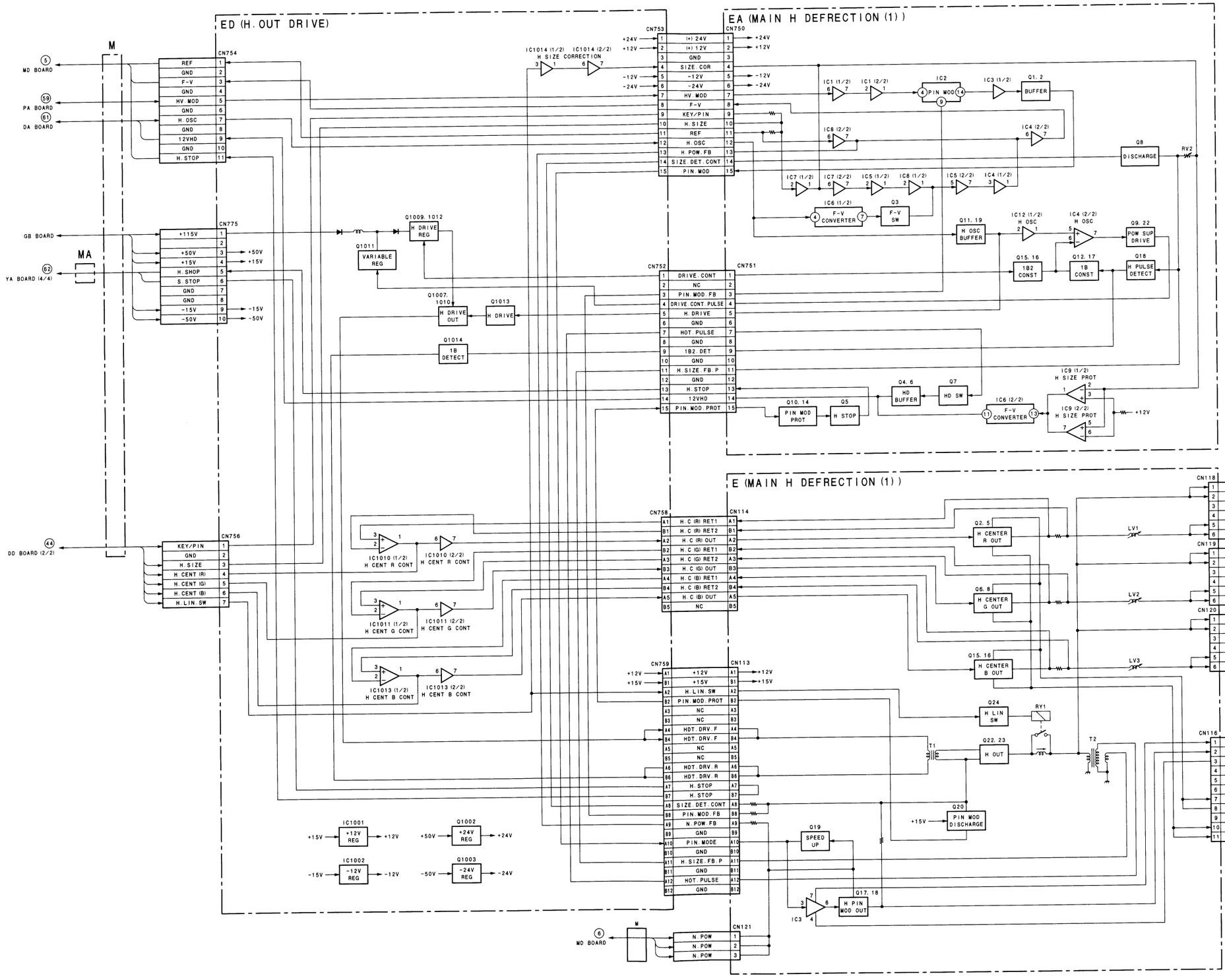
ED (H. OUT DRIVE)
EA (MAIN H DEFRECTION (1))
E (MAIN H DEFRECTION (1))
CN754
CN775
CN756
CN753
CN750
CN752
CN751
CN758
CN114
CN759
CN113
CN118
CN119
CN120
CN116
CN121
MD BOARD
PA BOARD
DA BOARD
GB BOARD
YA BOARD (4/4)
DD BOARD (2/2)
PE BOARD
DY ASS'Y R
DY ASS'Y G
DY ASS'Y B
H SIZE CORRECTION
PIN MOD
BUFFER
DISCHARGE
F-V CONVERTER
F-V SW
H OSC BUFFER
H OSC
POW SUP DRIVE
1B2 CONST
1B CONST
H PULSE DETECT
VARIABLE REG
H DRIVE REG
H DRIVE OUT
H DRIVE
1B DETECT
PIN MOD PROT
H STOP
HD BUFFER
HD SW
H SIZE PROT
H CENTER R OUT
H CENTER G OUT
H CENTER B OUT
H LIN SW
H OUT
PIN MOD DISCHARGE
SPEED UP
H PIN MOD OUT
H CENT R CONT
H CENT G CONT
H CENT B CONT
+12V REG
+24V REG
-12V REG
-24V REG

 9-20

 EBH, EBQ

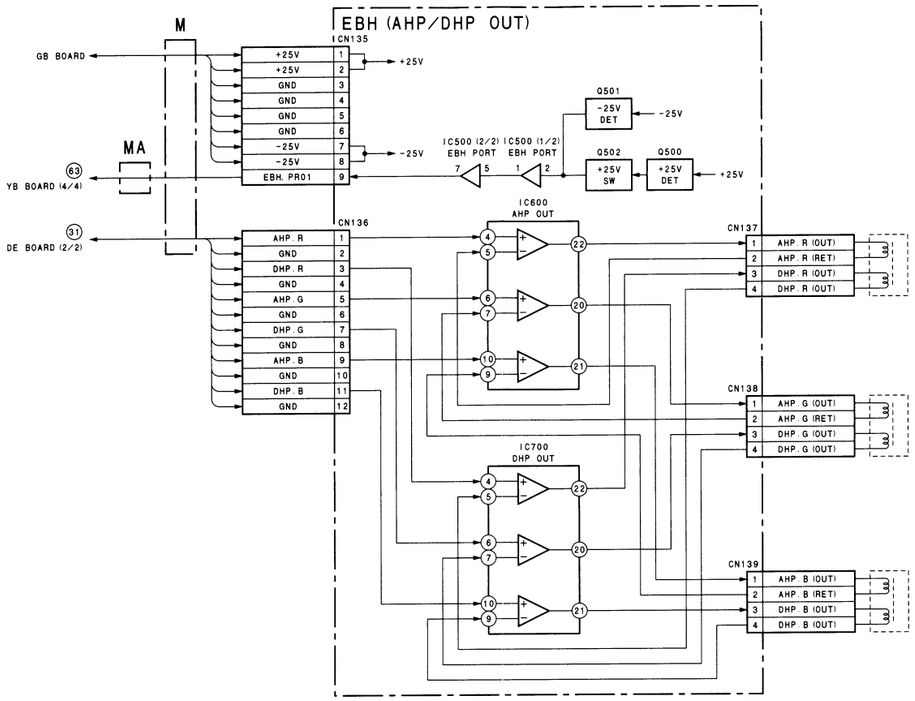
EBH (AHP/DHP OUT)
M
MA
GB BOARD
YB BOARD (4/4)
DE BOARD (2/2)
CN135
+25V
GND
-25V
EBH. PR01
CN136
AHP. R
DHP. R
AHP. G
DHP. G
AHP. B
DHP. B
Q501
-25V DET
Q502
+25V SW
Q500
+25V DET
IC500 (2/2) EBH PORT
IC500 (1/2) EBH PORT
IC600 AHP OUT
IC700 DHP OUT
CN137
AHP. R (OUT)
AHP. R (RET)
DHP. R (OUT)
CN138
AHP. G (OUT)
AHP. G (RET)
DHP. G (OUT)
CN139
AHP. B (OUT)
AHP. B (RET)
DHP. B (OUT)

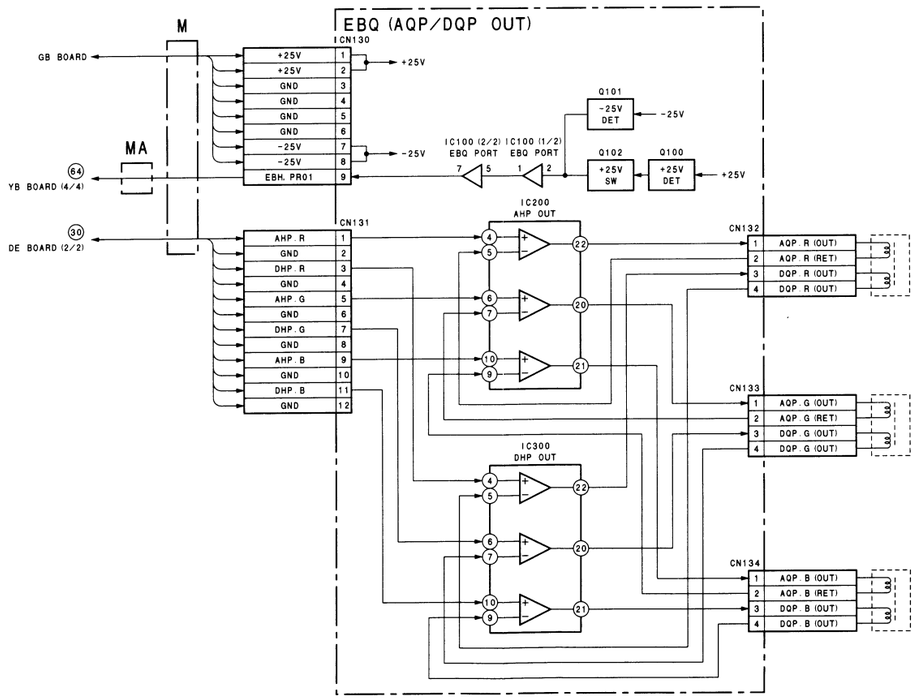
EBQ (AQP/DQP OUT)
M
MA
GB BOARD
YB BOARD (4/4)
DE BOARD (2/2)
CN130
+25V
GND
-25V
EBH. PR01
CN131
AHP. R
DHP. R
AHP. G
DHP. G
AHP. B
DHP. B
Q101
-25V DET
Q102
+25V SW
Q100
+25V DET
IC100 (2/2) EBQ PORT
IC100 (1/2) EBQ PORT
IC200 AHP OUT
IC300 DHP OUT
CN132
AQP. R (OUT)
AQP. R (RET)
DQP. R (OUT)
CN133
AQP. G (OUT)
AQP. G (RET)
DQP. G (OUT)
CN134
AQP. B (OUT)
AQP. B (RET)
DQP. B (OUT)

 9-21

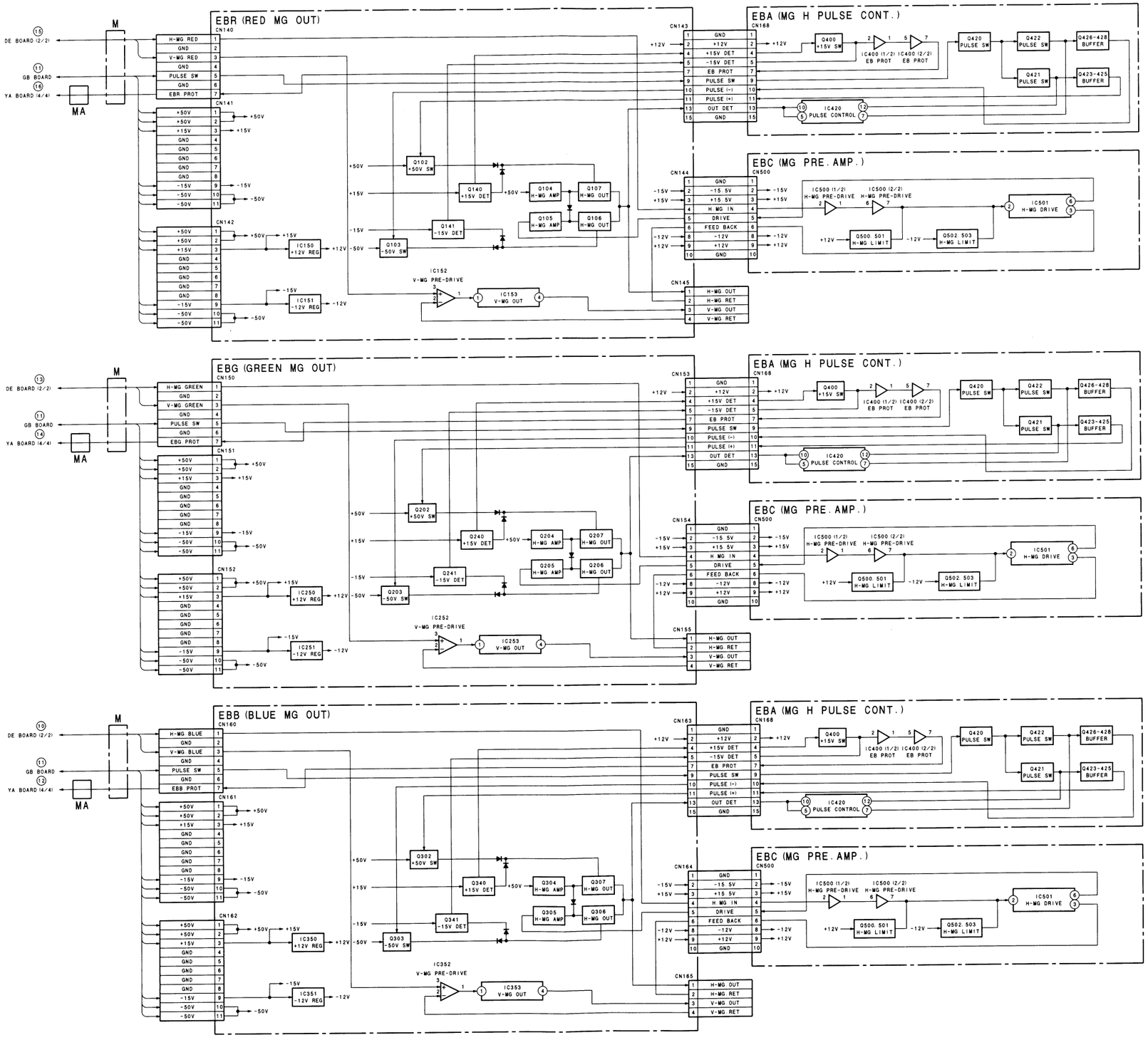
EBR (RED MG OUT)
EBG (GREEN MG OUT)
EBB (BLUE MG OUT)
EBA (MG H PULSE CONT.)
EBC (MG PRE. AMP.)
DE BOARD (2/2)
GB BOARD
YA BOARD (4/4)
M
MA
IC420 PULSE CONTROL
IC152 V-MG PRE-DRIVE
IC252 V-MG PRE-DRIVE
IC352 V-MG PRE-DRIVE

 PA, PB

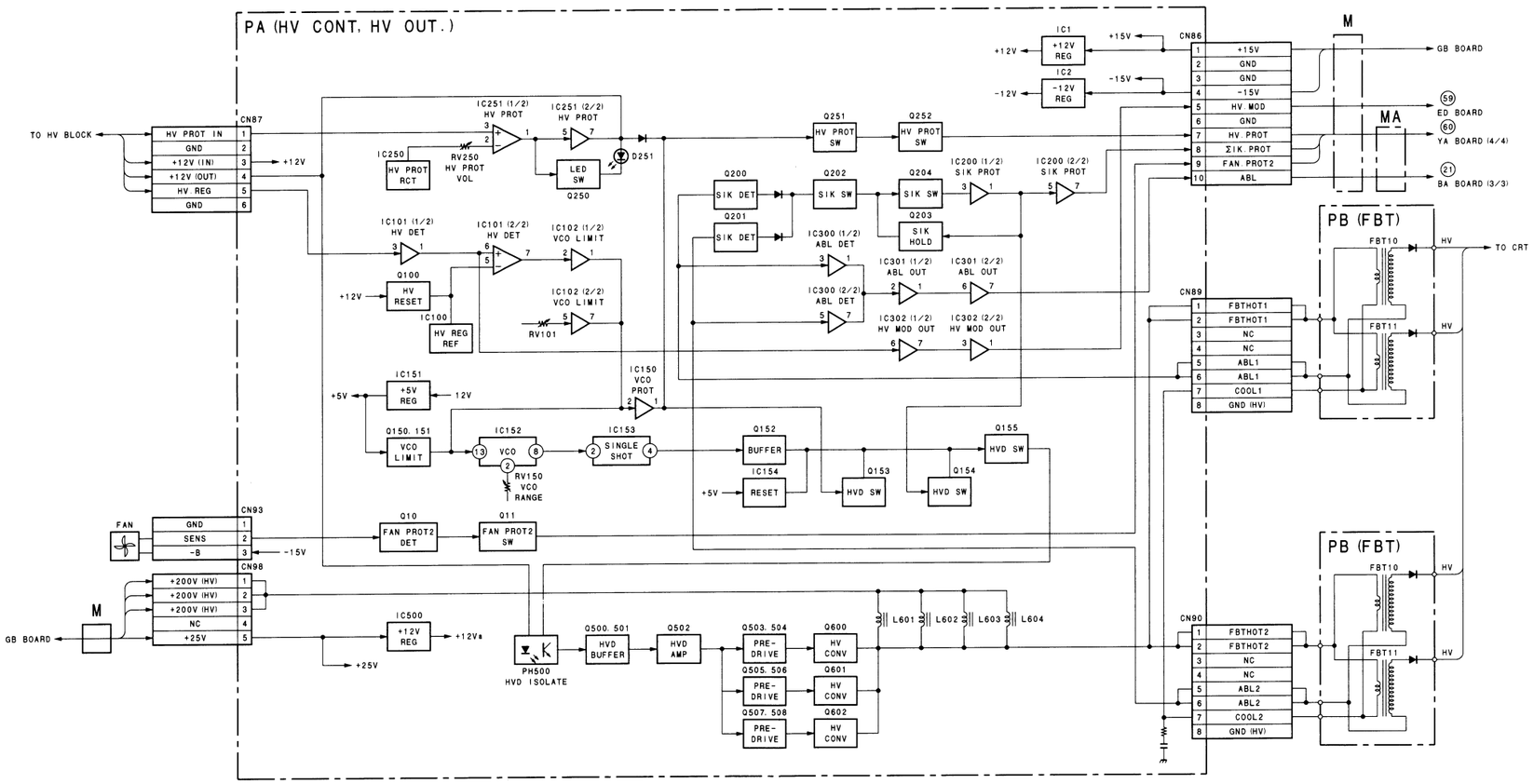
PA (HV CONT, HV OUT.)
TO HV BLOCK
CN87
HV PROT IN
GND
+12V (IN)
+12V (OUT)
HV REG
GND
+12V
IC251 (1/2) HV PROT
IC251 (2/2) HV PROT
IC250 HV PROT RCT
RV250 HV PROT VOL
LED SW Q250
D251
IC101 (1/2) HV DET
IC101 (2/2) HV DET
IC102 (1/2) VCO LIMIT
IC102 (2/2) VCO LIMIT
Q100 HV RESET
IC100 HV REG REF
RV101
IC151 +5V REG
+5V
12V
IC150 VCO PROT
Q150, 151 VCO LIMIT
IC152 VCO
RV150 VCO RANGE
IC153 SINGLE SHOT
Q152 BUFFER
IC154 RESET
Q153 HVD SW
Q154 HVD SW
Q155 HVD SW
CN93
FAN
GND
SENS
-B
-15V
Q10 FAN PROT2 DET
Q11 FAN PROT2 SW
CN98
+200V (HV)
+200V (HV)
+200V (HV)
NC
+25V
M
GB BOARD
IC500 +12V REG
+12Va
+25V
PH500 HVD ISOLATE
Q500, 501 HVD BUFFER
Q502 HVD AMP
Q503, 504 PRE-DRIVE
Q505, 506 PRE-DRIVE
Q507, 508 PRE-DRIVE
Q600 HV CONV
Q601 HV CONV
Q602 HV CONV
L601
L602
L603
L604
Q251 HV PROT SW
Q252 HV PROT SW
Q200 SIK DET
Q201 SIK DET
Q202 SIK SW
Q204 SIK SW
Q203 SIK HOLD
IC200 (1/2) SIK PROT
IC200 (2/2) SIK PROT
IC300 (1/2) ABL DET
IC300 (2/2) ABL DET
IC301 (1/2) ABL OUT
IC301 (2/2) ABL OUT
IC302 (1/2) HV MOD OUT
IC302 (2/2) HV MOD OUT
IC1 +12V REG
IC2 -12V REG
+12V
-12V
+15V
-15V
CN86
+15V
GND
GND
-15V
HV MOD
GND
HV PROT
ΣIK PROT
FAN PROT2
ABL
M
MA
GB BOARD
59 ED BOARD
60 YA BOARD (4/4)
21 BA BOARD (3/3)
PB (FBT)
FBT10
FBT11
HV
TO CRT
CN89
FBTHOT1
FBTHOT1
NC
NC
ABL1
ABL1
COOL1
GND (HV)
PB (FBT)
FBT10
FBT11
HV
CN90
FBTHOT2
FBTHOT2
NC
NC
ABL2
ABL2
COOL2
GND (HV)

 9-23

 MD, NB, PD

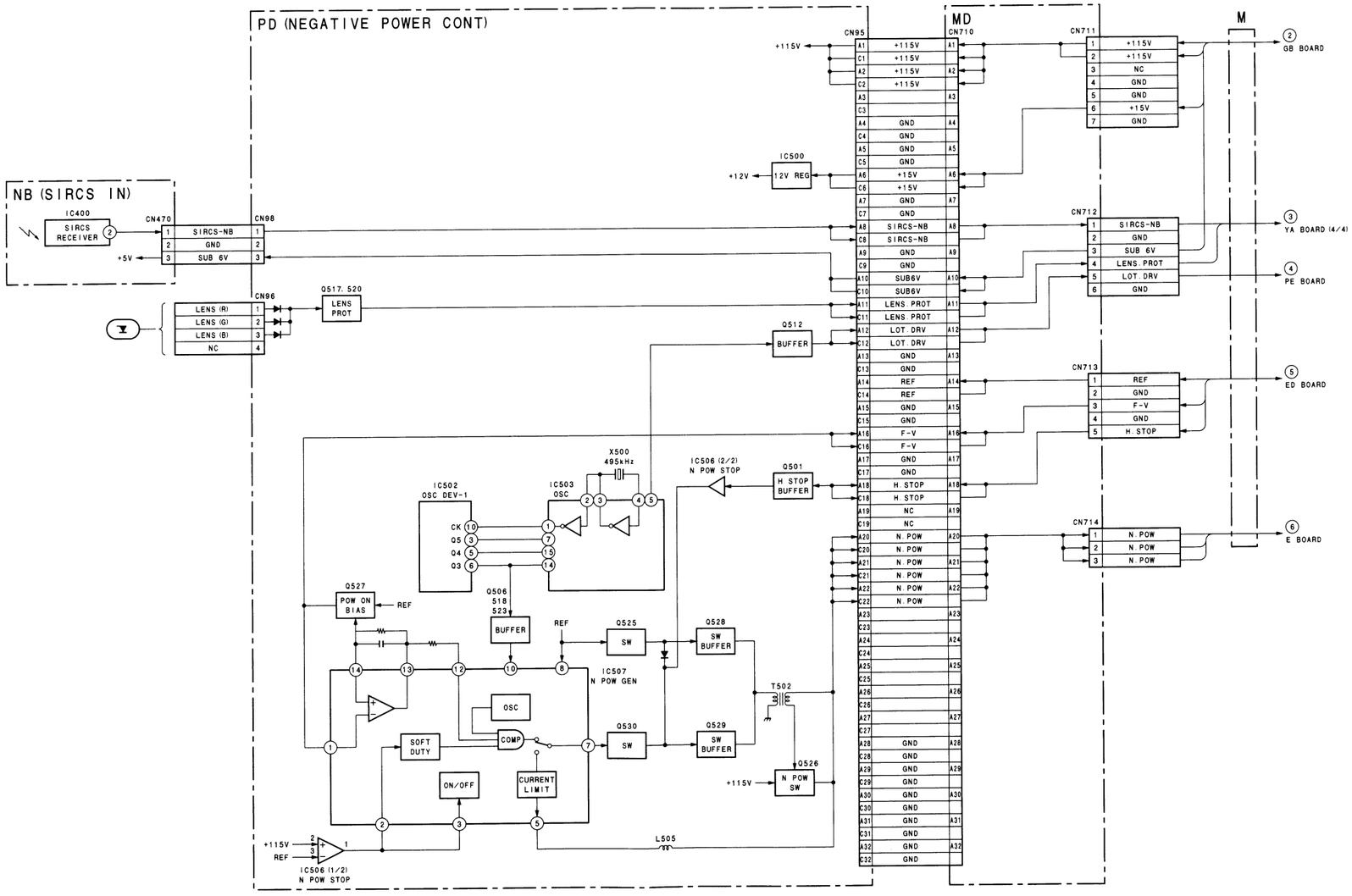
PD (NEGATIVE POWER CONT)
NB (SIRCS IN)
IC400
SIRCS RECEIVER
CN470
SIRCS-NB
GND
SUB 6V
+5V
CN98
CN96
LENS (R)
LENS (G)
LENS (B)
NC
Q517, 520
LENS PROT
Q512
BUFFER
CN95
+115V
+12V
IC500
12V REG
MD
CN710
CN711
CN712
CN713
CN714
M
GND
+15V
SIRCS-NB
SUB6V
LENS PROT
LOT DRV
REF
F-V
H STOP
N POW
NC
GND
SUB 6V
+15V
2 GB BOARD
3 YA BOARD (4/4)
4 PE BOARD
5 ED BOARD
6 E BOARD
X500
495kHz
IC502
OSC DEV-1
IC503
OSC
CK
Q5
Q4
Q3
IC506 (2/2)
N POW STOP
Q501
H STOP BUFFER
Q527
POW ON BIAS
Q506
518
523
BUFFER
Q525
SW
Q528
SW BUFFER
IC507
N POW GEN
OSC
COMP
SOFT DUTY
ON/OFF
CURRENT LIMIT
Q530
SW
Q529
SW BUFFER
T502
Q526
N POW SW
L505
IC506 (1/2)
N POW STOP

 9-24

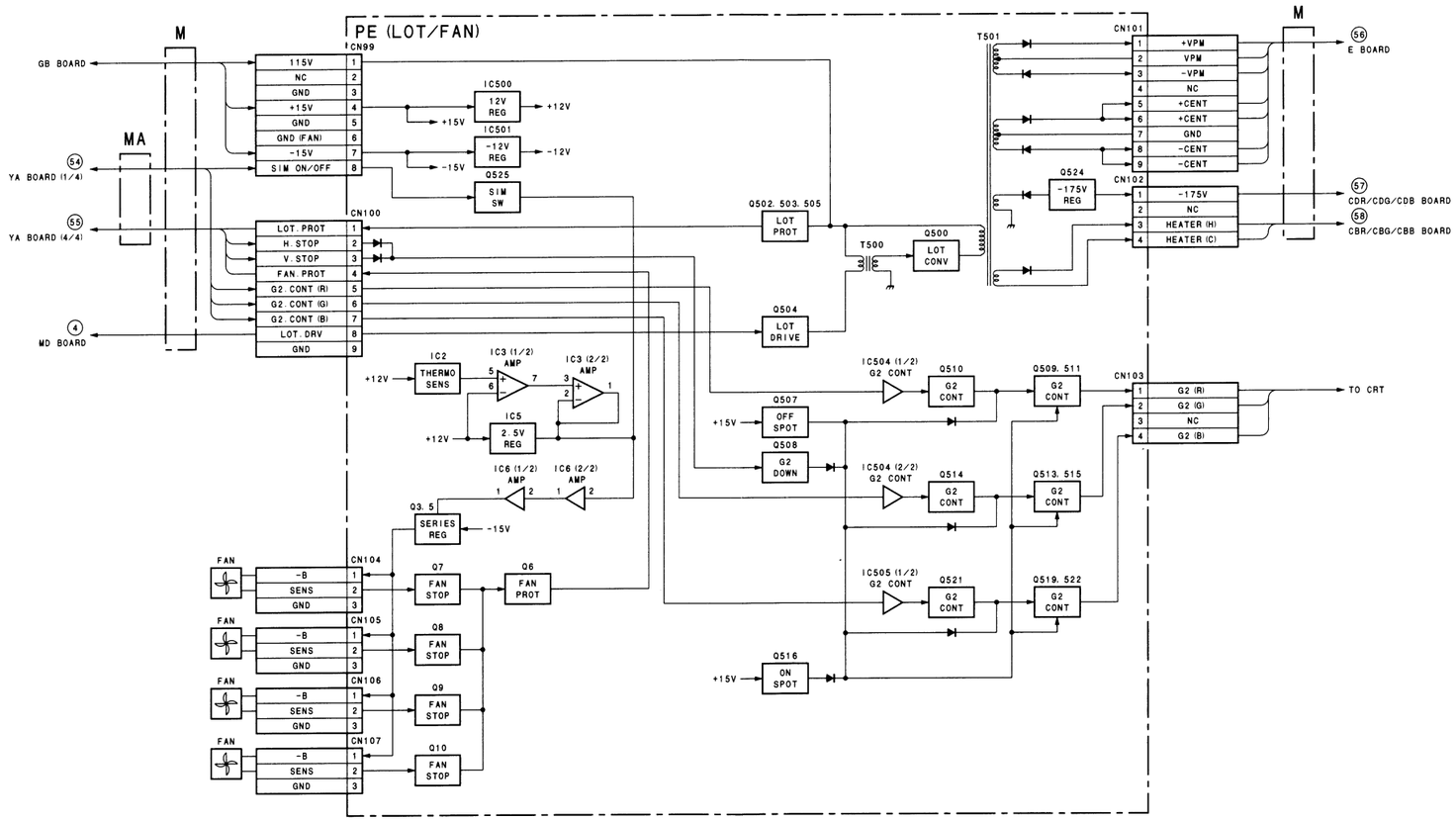
PE (LOT/FAN)
M
MA
GB BOARD
YA BOARD (1/4)
YA BOARD (4/4)
MD BOARD
CN99
115V
NC
GND
+15V
GND
GND (FAN)
-15V
SIM ON/OFF
CN100
LOT. PROT
H. STOP
V. STOP
FAN. PROT
G2. CONT (R)
G2. CONT (G)
G2. CONT (B)
LOT. DRV
GND
IC500
12V REG
IC501
-12V REG
Q525
SIM SW
Q502. 503. 505
LOT PROT
T500
Q500
LOT CONV
Q504
LOT DRIVE
IC2
THERMO SENS
IC3 (1/2) AMP
IC3 (2/2) AMP
IC5
2.5V REG
IC6 (1/2) AMP
IC6 (2/2) AMP
Q3. 5
SERIES REG
FAN
CN104
CN105
CN106
CN107
-B
SENS
GND
Q7
Q8
Q9
Q10
FAN STOP
Q6
FAN PROT
T501
CN101
+VPM
VPM
-VPM
NC
+CENT
GND
-CENT
Q524
-175V REG
CN102
-175V
HEATER (H)
HEATER (C)
E BOARD
CDR/CDG/CDB BOARD
CBR/CBG/CBB BOARD
IC504 (1/2) G2 CONT
IC504 (2/2) G2 CONT
IC505 (1/2) G2 CONT
Q507
OFF SPOT
Q508
G2 DOWN
Q516
ON SPOT
Q510
Q514
Q521
G2 CONT
Q509. 511
Q513. 515
Q519. 522
CN103
G2 (R)
G2 (G)
NC
G2 (B)
TO CRT

CAB, CAG, CAR, CBB, CBG, CBR, CDB, CDG, CDR

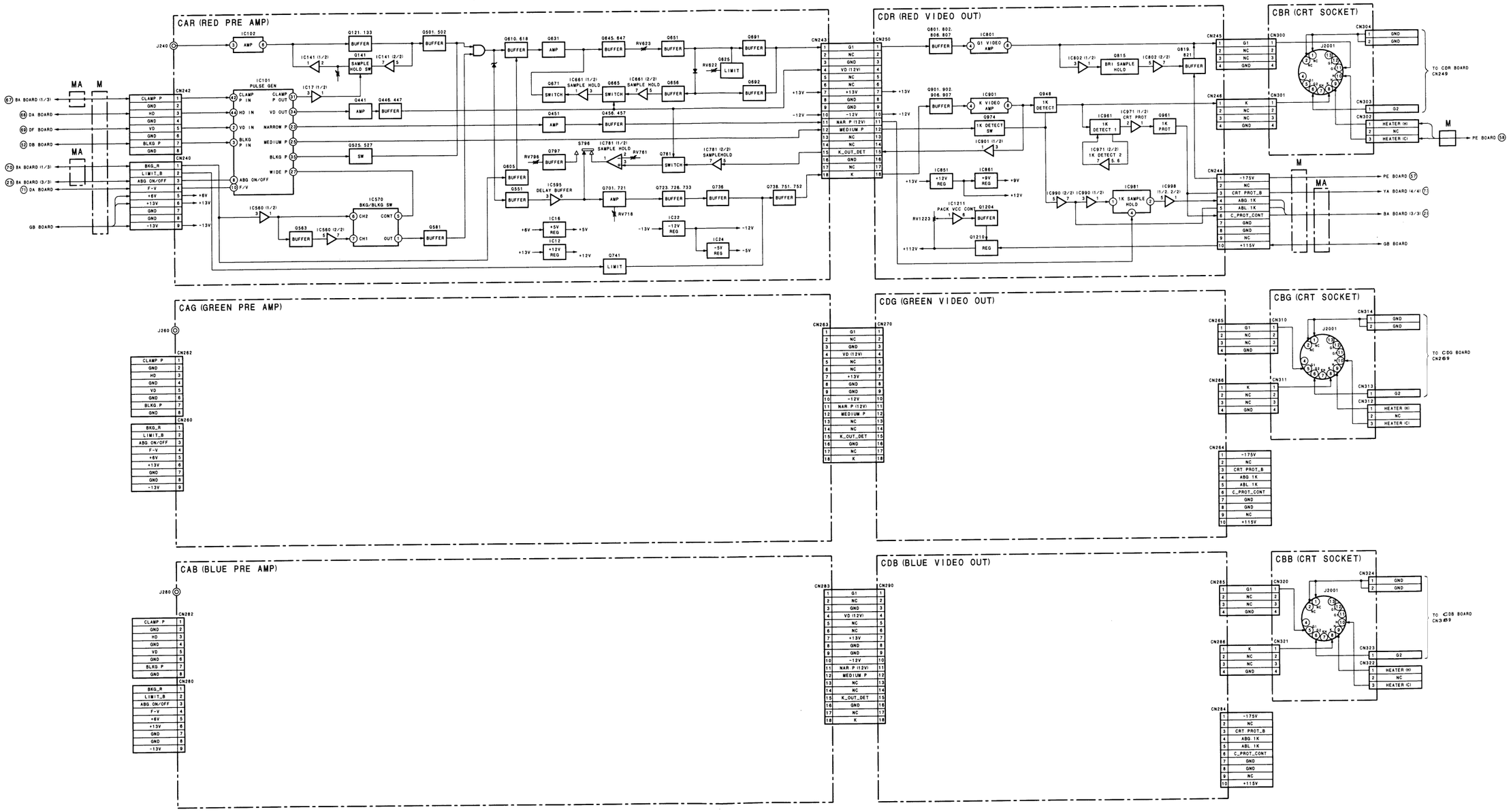

9-26

SECTION 10
DIAGRAMS

10-1

 FRAME (1/11)

10-1. FRAME SCHEMATIC DIAGRAMS

FRAME (1/11) WIRING

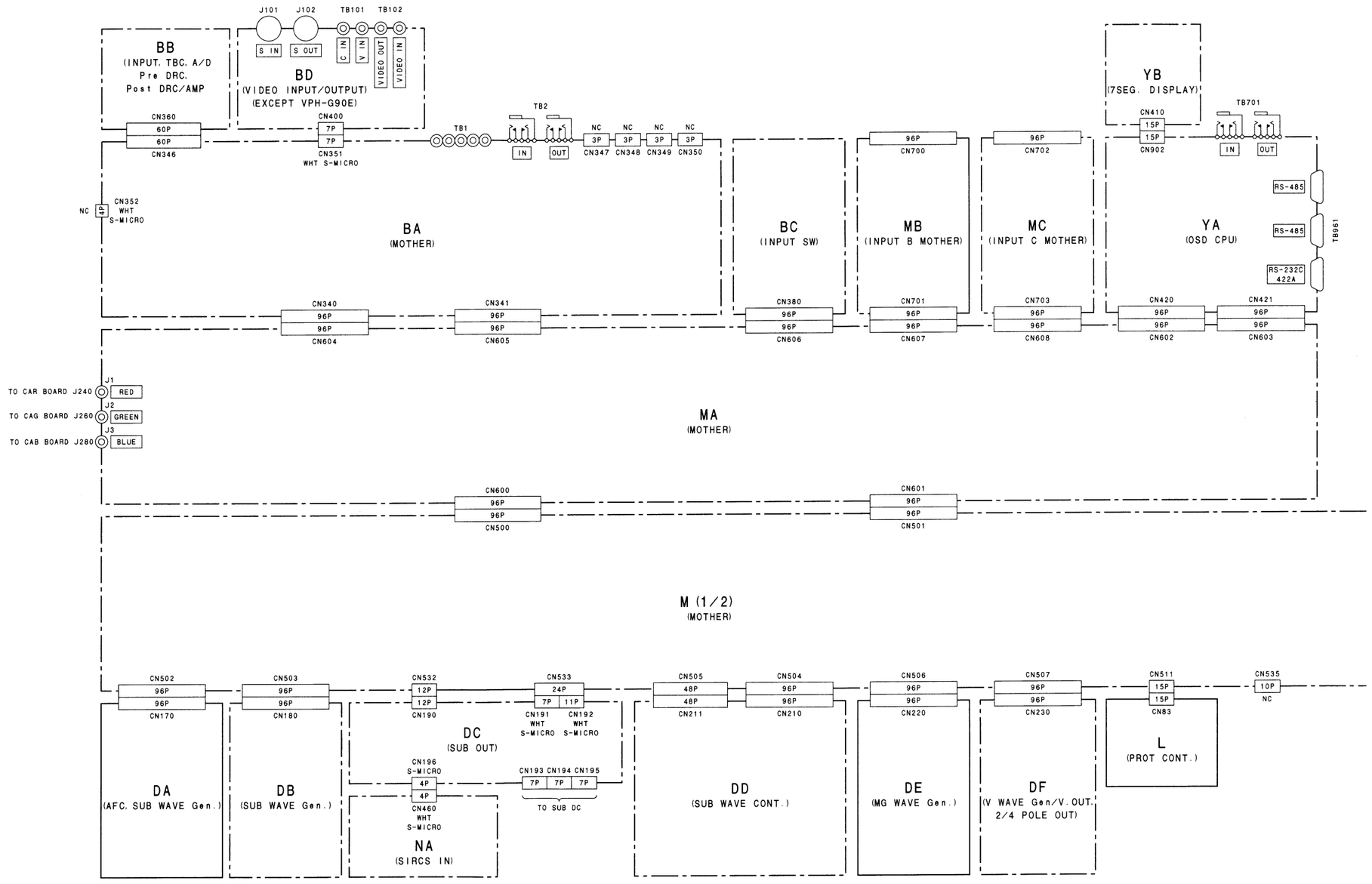

 10-2

FRAME (2/11) WIRING

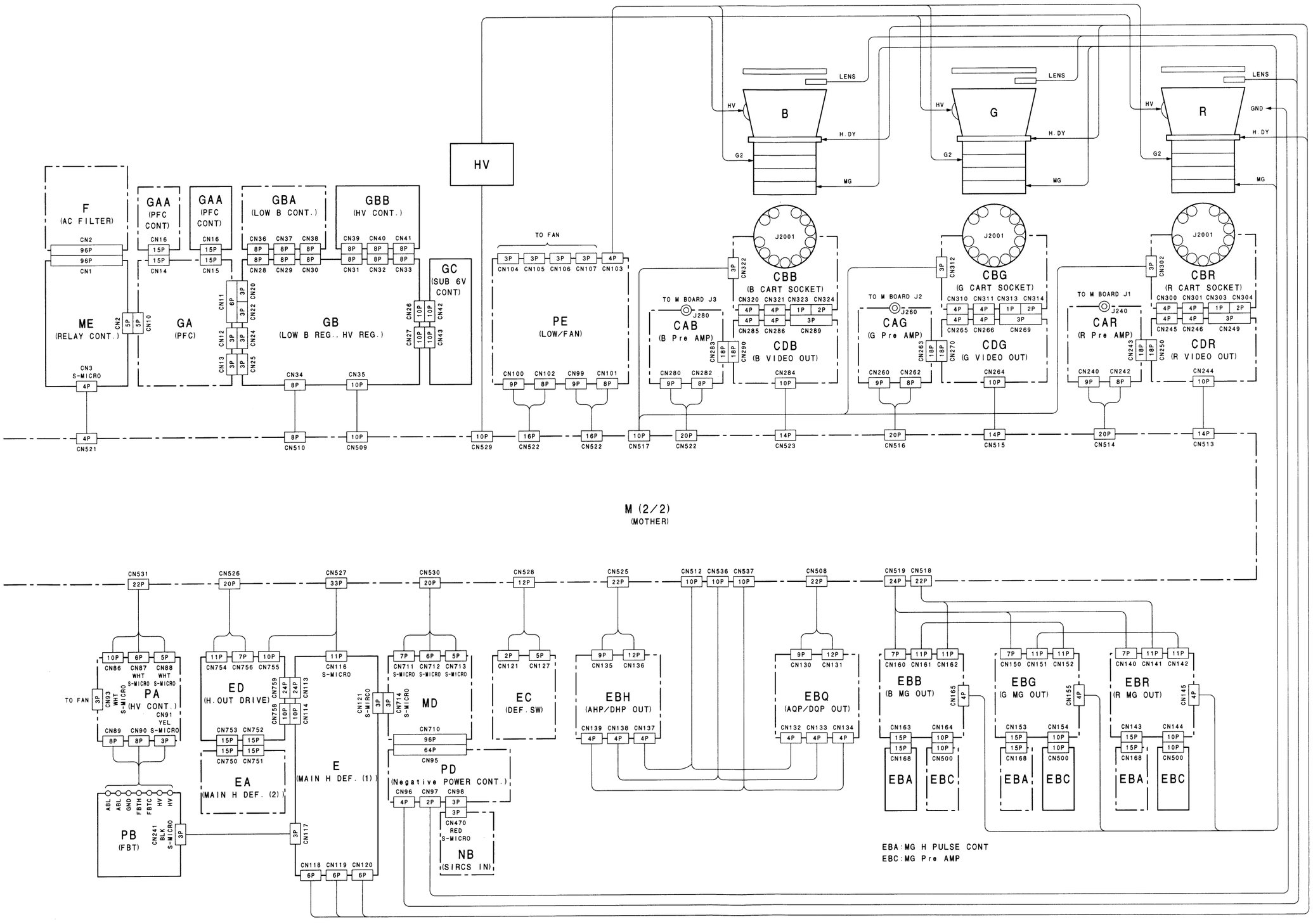

 FRAME (3/11)

FRAME (3/11) WIRING

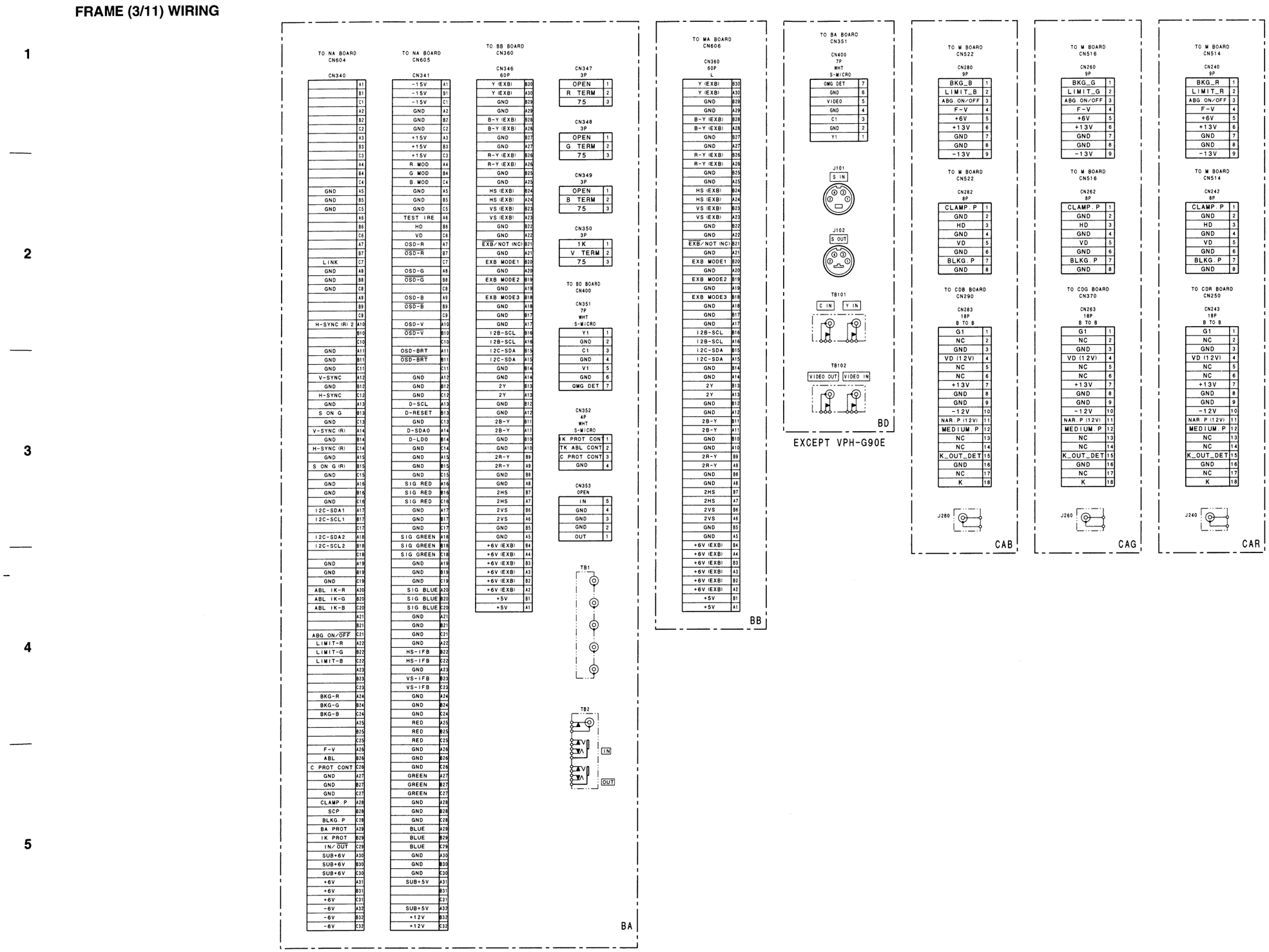

 10-4

FRAME (4/11) WIRING

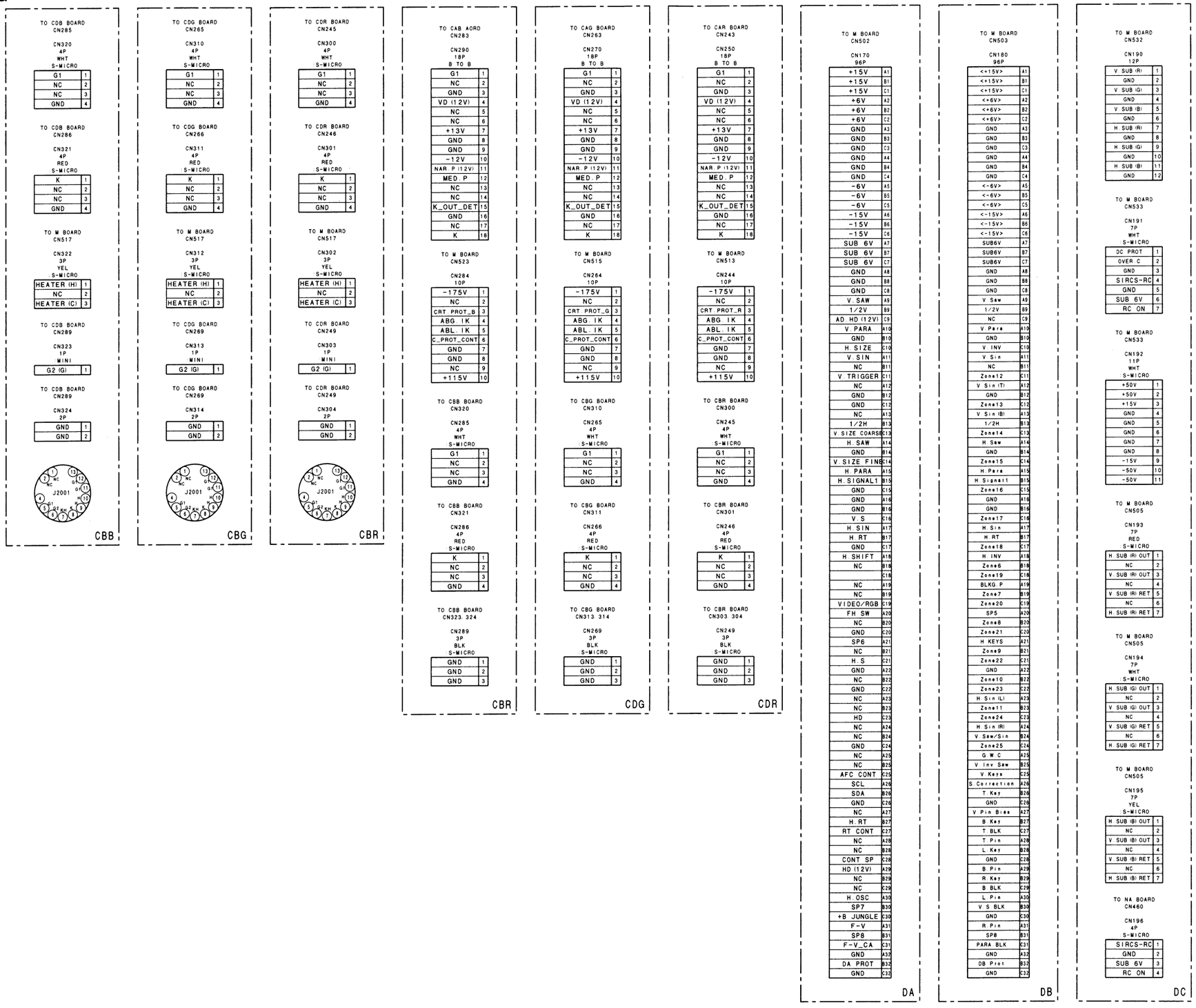

FRAME (5/11) WIRING

TO M BOARD
CN504

CN210
96P

<+15V>	A1
<+15V>	B1
<+15V>	C1
<+6V>	A2
<+6V>	B2
<+6V>	C2
GND	A3
GND	B3
GND	C3
GND	A4
GND	B4
GND	C4
<-6V>	A5
<-6V>	B5
<-6V>	C5
<-15V>	A6
<-15V>	B6
<-15V>	C6
SUB 6V	A7
SUB 6V	B7
SUB 6V	C7
GND	A8
GND	B8
GND	C8
V.Saw	A9
D-RESET	B9
NC	C9
V.Para	A10
D-SCL	B10
H.Size	C10
NC	A11
D-LD 0	B11
Zone 12	C11
V.Sin (T)	A12
D-LD 1	B12
Zone 13	C12
V.Sin (B)	A13
D-LD 2	B13
Zone 14	C13
H.Saw	A14
D-LD 3	B14
Zone 15	C14
H.Para	A15
D-SDA 0	B15
Zone 16	C15
GND	A16
D-SDA 1	B16
Zone 17	C16
H.Sin	A17
D-SDA 2	B17
Zone 18	C17
H.Shift	A18
Zone 6	B18
Zone 19	C18
NC	A19
Zone 7	B19
Zone 20	C19
fnSW	A20
Zone 8	B20
Zone 21	C20
H KEYS	A21
Zone 9	B21
Zone 22	C21
GND	A22
Zone 10	B22
Zone 23	C22
H.Sin (L)	A23
Zone 11	B23
Zone 24	C23
H.Sin (R)	A24
V.Saw/Sin	B24
Zone 25	C24
G.W.C	A25
V.INV Saw	B25
V.Keys	C25
S.Crrection	A26
T.Key	B26
GND	C26
V.Pin Bias	A27
B.Key	B27
T.BLK	C27
T.Pin	A28
L.Key	B28
GND	C28
B.Pin	A29
R.Key	B29
B.BLK	C29
L.Pin	A30
SP 7	B30
GND	C30
R.Pin	A31
SP 8	B31
NC	C31
GND	A32
DDPret	B32
GND	C32

DD

TO M BOARD
CN506

CN220
96P

+15V	C32
+15V	B32
+15V	A32
+6V	C31
+6V	B31
+6V	A31
GND	C30
GND	B30
GND	A30
GND	C29
GND	B29
GND	A29
-6V	C28
-6V	B28
-6V	A28
-15V	C27
-15V	B27
-15V	A27
SUB 6V	C26
SUB 6V	B26
SUB 6V	A26
GND	C25
GND	B25
GND	A25
AQP OUT (R)	C24
D-RESET	B24
AD.HD (12V)	A24
GND	C23
D-SCL	B23
H.SIZE	A23
DQP OUT (R)	C22
D-LD0	B22
V.TRIGGER	A22
GND	C21
D-LD1	B21
GND	A21
AQP OUT (G)	C20
D-LD2	B20
V.SIZE COARSE	A20
GND	C19
D-LD3	B19
V.SIZEFINE	A19
DQP OUT (G)	C18
D-SDA0	B18
GND	A18
GND	C17
D-SDA1	B17
PLUS.ON/OFF	A17
AQP OUT (B)	C16
D-SDA2	B16
SP1	A16
GND	C15
NC	B15
SP2	A15
DQP OUT (B)	C14
NC	B14
SP4	A14
GND	C13
NC	B13
AHP OUT (R)	A13
MG FOCUS (RH)	C12
NC	B12
GND	A12
GND	C11
NC	B11
DHP OUT (R)	A11
MG FOCUS (RV)	C10
NC	B10
GND	A10
GND	C9
NC	B9
AHP OUT (G)	A9
MG FOCUS (GH)	C8
NC	B8
GND	A8
GND	C7
NC	B7
DHP OUT (G)	A7
MG FOCUS (GV)	C6
NC	B6
GND	A6
GND	C5
NC	B5
AHP OUT (B)	A5
MG FOCUS (BH)	C4
NC	B4
GND	A4
GND	C3
SP7	B3
DHP OUT (B)	A3
MG FOCUS (BV)	C2
SP8	B2
GND	A2
GND	C1
DE PROT	B1
GND	A1

DE

TO M BOARD
CN307

CN230

+15V	C32
+15V	B32
+15V	A32
+6V	C31
+6V	B31
+6V	A31
GND	C30
GND	B30
GND	A30
GND	C29
GND	B29
GND	A29
-6V	C28
-6V	B28
-6V	A28
-15V	C27
-15V	B27
-15V	A27
SUB 6V	C26
SUB 6V	B26
SUB 6V	A26
GND	C25
GND	B25
GND	A25
2POLE OUT (GV)	C24
D-RESET	B24
NC	A24
2POLE OUT (GH)	C23
D-SCL	B23
V.INV	A23
2POLE RET (GH)	C22
D-LD0	B22
V.TRIGGER	A22
2POLE RET (GV)	C21
D-LD1	B21
GND	A21
4POLE OUT (GV)	C20
D-LD2	B20
V.SIZE COARSE	A20
4POLE OUT (GH)	C19
D-LD3	B19
V.SIZE FINE	A19
4POLE RET (GH)	C18
D-SDA0	B18
GND	A18
4POLE RET (GV)	C17
D-SDA1	B17
VD	A17
NC	C16
D-SDA2	B16
SP1	A16
NC	C15
NC	B15
SP2	A15
NC	C14
NC	B14
SP4	A14
NC	C13
NC	B13
2POLE OUT (BV)	A13
2POLE OUT (RV)	C12
NC	B12
2POLE OUT (BH)	A12
2POLE OUT (RH)	C11
NC	B11
2POLE RET (BH)	A11
2POLE RET (RH)	C10
NC	B10
2POLE RET (BV)	A10
2POLE RET (RV)	C9
NC	B9
4POLE OUT (BV)	A9
4POLE OUT (RV)	C8
NC	B8
4POLE OUT (BH)	A8
4POLE OUT (RH)	C7
NC	B7
4POLE RET (BH)	A7
4POLE RET (RH)	C6
NC	B6
4POLE RET (BV)	A6
4POLE RET (RV)	C5
NC	B5
NC	A5
NC	C4
NC	B4
NC	A4
NC	C3
V.S.BLK	B3
NC	A3
NC	C2
SP8	B2
V.DEF	A2
NC	C1
V.STOP	B1
GND	A1

DF

TO ED BOARD
CN753

CN113
24P

+12V	A1
+15V	B1
H.LIN.SW	A2
PIN.MOD.PROT	B2
NC	A3
NC	B3
HDT.DRV.F	A4
HDT.DRV.F	B4
NC	A5
NC	B5
HDT.DRV.R	A6
HDT.DRV.R	B6
H.STOP	A7
H.STOP	B7
SIZE.DET.CONT	A8
PIN.MOD.FB	B8
N.POW.FB	A9
GND	B9
PIN.MOD	A10
GND	B10
H.SIZE.FB.P	A11
GND	B11
HOT.PULSE	A12
GND	B12

TO ED BOARD
CN751

CN751
15P

DRIVE.CONT	1
NC	2
PIN.MOD.FB	3
DRIVE.CONT.PULSE	4
H.DRIVE	5
GND	6
HOT.PULSE	7
GND	8
IB2.DET	9
GND	10
H.SIZE.FB.P	11
GND	12
H.STOP	13
12VHD	14
PIN.MOD.PROT	15

E

TO EBB BOARD CN163
EBG BOARD CN153
EBR BOARD CN143

CN168
15P

GND	1
+12V	2
NC	3
+15V DET.	4
-15V DET.	5
NC	6
EB PROT.	7
NC	8
PULSE SW	9
PULSE (-)	10
PULSE (+)	11
NC	12
OUT DET.	13
NC	14
GND	15

EBA

TO M BOARD
CN519

CN160
7P
BLU

H-MG.BLUE	1
GND	2
V-MG.BLUE	3
GND	4
PULSE SW	5
GND	6
EBB.PROT	7

TO M BOARD
CN518

CN161
11P
WHT

+50V	1
+50V	2
+15V	3
GND	4
GND	5
GND	6
GND	7
GND	8
-15V	9
-50V	10
-50V	11

TO M BOARD
CN518

CN162
11P
WHT

+50V	1
+50V	2
+15V	3
GND	4
GND	5
GND	6
GND	7
GND	8
-15V	9
-50V	10
-50V	11

TO EBA BOARD
CN168

CN163
15P

GND	1
+12V	2
NC	3
+15V DET.	4
-15V DET.	5
NC	6
EB PROT.	7
NC	8
PULSE SW	9
PULSE (-)	10
PULSE (+)	11
NC	12
OUT DET.	13
NC	14
GND	15

TO EBC BOARD
CN500

CN164
10P

GND	1
-15.5V	2
+15.5V	3
H.MG IN	4
DRIVE	5
FEED BACK	6
NC	7
-12V	8
+12V	9
GND	10

TO CRT

CN165
4P
YEL
:S-MICRO

H-MG.OUT	1
H-MG.RET	2
V-MG.OUT	3
V-MG.RET	4

EBB

TO EBB BOARD CN164
EBG BOARD CN154
EBR BOARD CN144

CN500
10P

GND	1
-15.5V	2
+15.5V	3
H.MGIN	4
DRIVE	5
FEED BACK	6
NC	7
-12V	8
+12V	9
GND	10

EBC

TO M BOARD
CN519

CN150
7P
WHT

H-MG.GREEN	1
GND	2
V-MG.GREEN	3
GND	4
PULSE SW	5
GND	6
EBG.PROT	7

TO M BOARD
CN518

CN151
11P
WHT

+50V	1
+50V	2
+15V	3
GND	4
GND	5
GND	6
GND	7
GND	8
-15V	9
-50V	10
-50V	11

TO M BOARD
CN518

CN152
11P
WHT

+50V	1
+50V	2
+15V	3
GND	4
GND	5
GND	6
GND	7
GND	8
-15V	9
-50V	10
-50V	11

TO EBA BOARD
CN168

CN153
15P

GND	1
+12V	2
NC	3
+15V DET.	4
-15V DET.	5
NC	6
EB PROT.	7
NC	8
PULSE SW	9
PULSE (-)	10
PULSE (+)	11
NC	12
OUT DET.	13
NC	14
GND	15

TO EBC BOARD
CN500

CN154
10P

GND	1
-15.5V	2
+15.5V	3
H.MG IN	4
DRIVE	5
FEED BACK	6
NC	7
-12V	8
+12V	9
GND	10

TO CRT

CN155
4P
WHT
:S-MICRO

H-MG.OUT	1
H-MG.RET	2
V-MG.OUT	3
V-MG.RET	4

EBG

FRAME (6/11) WIRING

TO M BOARD
CN525

CN135
9P
WHT

+25V	1
+25V	2
GND	3
GND	4
GND	5
GND	6
-25V	7
-25V	8
EBH PROT	9

TO M BAORD
CN525

CN136
12P
WHT

AHP R	1
GND	2
DHP R	3
GND	4
AHP G	5
GND	6
DHP G	7
GND	8
AHP B	9
GND	10
DHP B	11
GND	12

TO M BOARD
CN512

CN137
4P
RED
S-MICRO

AHP R (OUT)	1
AHP R (RET)	2
DHP R (OUT)	3
DHP R (OUT)	4

TO M BOARD
CN536

CN138
4P
WHT
S-MICRO

AHP G (OUT)	1
AHP G (RET)	2
DHP G (OUT)	3
DHP G (OUT)	4

TO M BOARD
CN537

CN139
4P
YEL
S-MICRO

AHP B (OUT)	1
AHP B (RET)	2
DHP B (OUT)	3
DHP B (OUT)	4

EBH

TO M BOARD
CN508

CN130
9P
WHT

+25V	1
+25V	2
GND	3
GND	4
GND	5
GND	6
-25V	7
-25V	8
EBQ PROT	9

TO M BOARD
CN525

CN131
12P
WHT

AQP R	1
GND	2
DQP R	3
GND	4
AQP G	5
GND	6
DQP G	7
GND	8
AQP B	9
GND	10
DQP B	11
GND	12

TO M BOARD
CN512

CN132
4P
RED
S-MICRO

AQP R (OUT)	1
AQP R (RET)	2
DQP R (OUT)	3
DQP R (OUT)	4

TO M BOARD
CN536

CN133
4P
WHT
S-MICRO

AQP G (OUT)	1
AQP G (RET)	2
DQP G (OUT)	3
DQP G (OUT)	4

TO M BOARD
CN537

CN134
4P
YEL
S-MICRO

AQP B (OUT)	1
AQP B (RET)	2
DQP B (OUT)	3
DQP B (OUT)	4

EBQ

TO M BOARD
CN519

CN140
7P
RED

H-MG RED	1
GND	2
V-MG RED	3
GND	4
PULSE SW	5
GND	6
EBR PROT	7

TO M BOARD
CN518

CN141
11P
WHT

+50V	1
+50V	2
+15V	3
GND	4
GND	5
GND	6
GND	7
GND	8
-15V	9
-50V	10
-50V	11

TO M BOARD
CN518

CN142
11P
WHT

+50V	1
+50V	2
+15V	3
GND	4
GND	5
GND	6
GND	7
GND	8
-15V	9
-50V	10
-50V	11

TO EBA BOARD
CN168

CN143
15P

GND	1
+12V	2
NC	3
+15V DET	4
-15V DET	5
NC	6
EB PROT	7
NC	8
PULSE SW	9
PULSE (-)	10
PULSE (+)	11
NC	12
OUT DET	13
NC	14
GND	15

TO EBC BOARD
CN500

CN144
10P

GND	1
-15.5V	2
+15.5V	3
H MG IN	4
DRIVE	5
FEED BACK	6
NC	7
-12V	8
+12V	9
GND	10

TO CRT

CN145
4P
RED
S-MICRO

H-MG OUT	1
H-MG RET	2
V-MG OUT	3
V-MG RET	4

EBR

TO M BOARD
CN528

CN121
3P
S-MICRO

N POW	1
N POW	2
N POW	3

TO M BOARD
CN528

CN127
5P

H INV	1
V INV	2
SUB 6V	3
GND	4
POLA PROT	5

EC

TO EA BOARD
CN751

CN752
15P

DRIVE CONT	1
NC	2
PIN MOD FB	3
DRIVE CONT PULSE	4
H DRIVE	5
GND	6
HOT PULSE	7
GND	8
IB2 DET	9
GND	10
H SIZE FB P	11
GND	12
H STOP	13
12VHD	14
PIN MOD PROT	15

TO EA BOARD
CN750

CN753
15P

(+) 24V	1
(+) 12V	2
GND	3
SIZE COR	4
-12V	5
-24V	6
HV MOD	7
F-V	8
KEY/PIN	9
H SIZE	10
REF	11
H OSC	12
N POW FB	13
SIZE DET CONT	14
PIN MOD	15

TO M BOARD
CN526

CN754
11P

1	REF
2	GND
3	F-V
4	GND
5	HV MOD
6	GND
7	H OSC
8	GND
9	12VHD
10	GND
11	H STOP

TO M BOARD
CN526

CN755
10P

+115V	1
	2
+50V	3
+15V	4
H SHOP	5
H STOP	6
GND	7
GND	8
-15V	9
-50V	10

TO M BOARD
CN526

CN756
7P

KEY/PIN	1
GND	2
H SIZE	3
H CENT (R)	4
H CENT (G)	5
H CENT (B)	6
H LIN SW	7

TO E BOARD
CN114

CN758
10P

H C (R) RET1	A1
H C (R) RET2	B1
H C (R) OUT	A2
H C (G) RET1	B2
H C (G) RET2	A3
H C (G) OUT	B3
H C (B) RET1	A4
H C (B) RET2	B4
H C (B) OUT	A5
NC	B5

TO E BOARD

CN759
24P

+12V	A1
15V	B1
H LIN SW	A2
PIN MOD PROT	B2
NC	A3
NC	B3
HDT DRV F	A4
HDT DRV F	B4
NC	A5
NC	B5
HDT DRV R	A6
HDT DRV R	B6
H STOP	A7
H STOP	B7
SIZE DET CONT	A8
PIN MOD FB	B8
N POW FB	A9
GND	B9
PIN MOD	A10
GND	B10
H SIZE FB P	A11
GND	B11
HOT PULSE	A12
GND	B12

ED

TO ME BOARD
CN1

CN2
96P

RELAY (+15V)	C32	
RELAY (+15V)	B32	
RELAY (+15V)	A32	
GND	C31	
GND	B31	
GND	A31	
	C30	
	B30	
	A30	
	C29	
	B29	
	A29	
	C28	
	B28	
	A28	
	C27	
	B27	
	A27	
AC (L)	C26	
AC (L)	B26	
AC (L)	A26	
AC (L)	C25	
AC (L)	B25	
AC (L)	A25	
	C24	
	B24	
	A24	
	C23	
	B23	
	A23	
	C22	
	B22	
	A22	
	C21	
	B21	
	A21	
AC (N)	C20	
AC (N)	B20	
AC (N)	A20	
AC (N)	C19	
AC (N)	B19	
AC (N)	A19	
	C18	
	B18	
	A18	
	C17	
	B17	
	A17	
	C16	
	B16	
	A16	
	C15	
	B15	
	A15	
AC (N)	C14	
AC (N)	B14	
AC (N)	A14	
AC (N)	C13	
AC (N)	B13	
AC (N)	A13	
	C12	
	B12	
	A12	
	C11	
	B11	
	A11	
	C10	
	B10	
	A10	
	C9	
	B9	
	A9	
AC (L)	C8	
AC (L)	B8	
AC (L)	A8	
AC (L)	C7	
AC (L)	B7	
AC (L)	A7	
	C6	
	B6	
	A6	
	C5	
	B5	
	A5	
	C4	
	B4	
	A4	
	C3	
	B3	
	A3	
GND	C2	
GND	B2	
GND	A2	
RELAY (200V)	C1	
RELAY (200V)	B1	
RELAY (200V)	A1	

F

TO ME BOARD
CN2

CN10
5P
BLK

AC (L)	1
AC (L)	2
NC	3
AC (N)	4
AC (N)	5

TO GB BOARD
CN20. 22

CN11
6P
BLK

380V (15V)	1
N C	2
GND (15V)	3
GND (200V)	4
N C	5
380V (200V)	6

TO GB BOARD
CN24

CN12
3P
WHT
S-MICRO

VCC (15V)	1
GND	2
OTP (15V)	3

TO GB BOARD
CN25

CN13
3P
RED
S-MICRO

VCC (200V)	1
GND	2
OTP (200V)	3

TO GAA BOARD
CN116

CN14
15P

VS	15
N C	14
N C	13
N C	12
GND1	11
ICVCC1	10
N C	9
DRV	8
N C	7
IS	6
IM	5
N C	4
N C	3
N C	2
ACS	1

TO GAA BOARD
CN116

CN15
15P

VS	15
N C	14
N C	13
N C	12
GND1	11
ICVCC1	10
N C	9
DRV	8
N C	7
IS	6
IM	5
N C	4
N C	3
N C	2
ACS	1

EBR

TO GA BOARD
CN114 115

CN16
15P

ACS	15
NC	14
NC	13
NC	12
IM	11
IS	10
NC	9
DRV	8
NC	7
VCC	6
GND	5
NC	4
NC	3
NC	2
VS	1

GAA

FRAME (7/11) WIRING

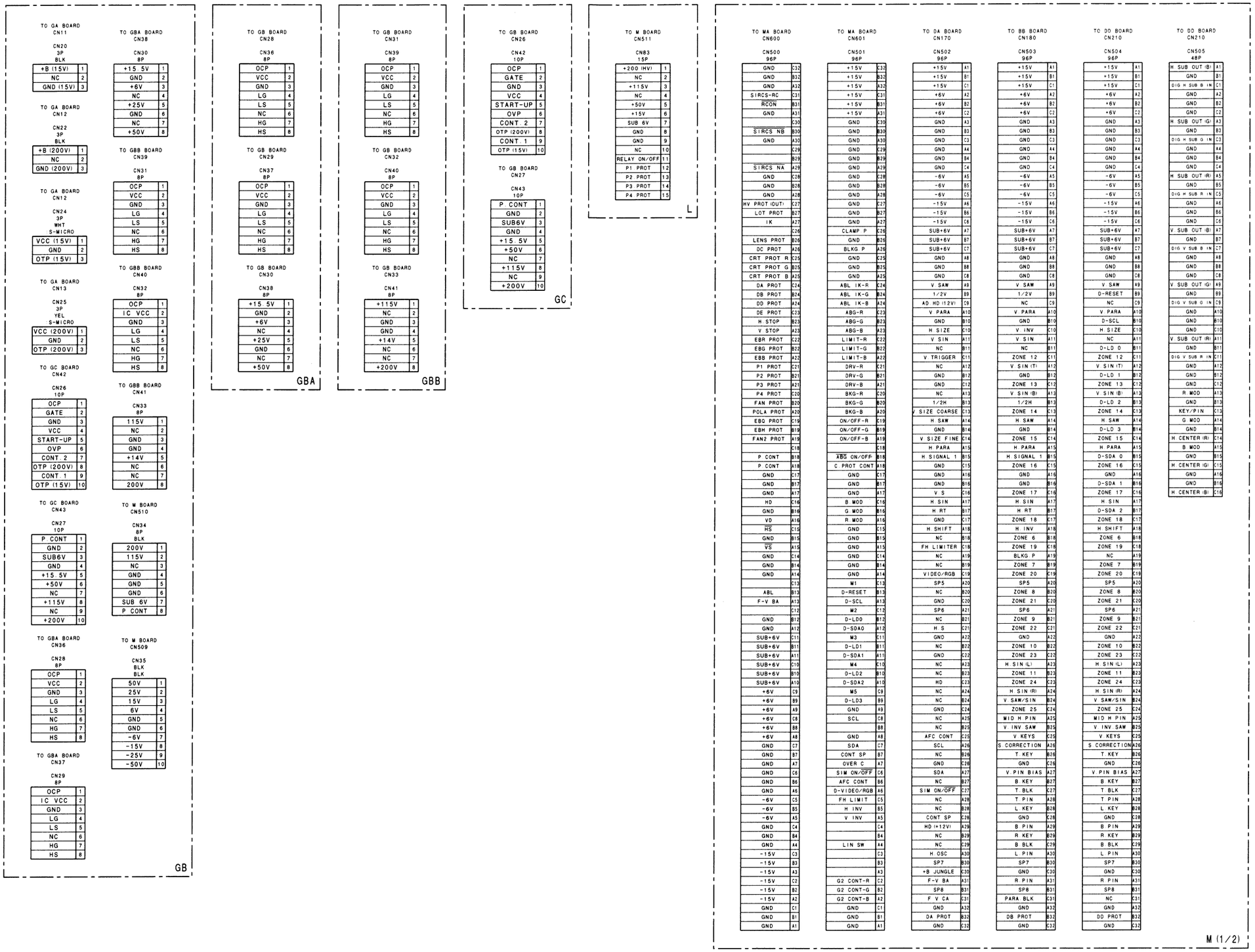

FRAME (8/11) WIRING

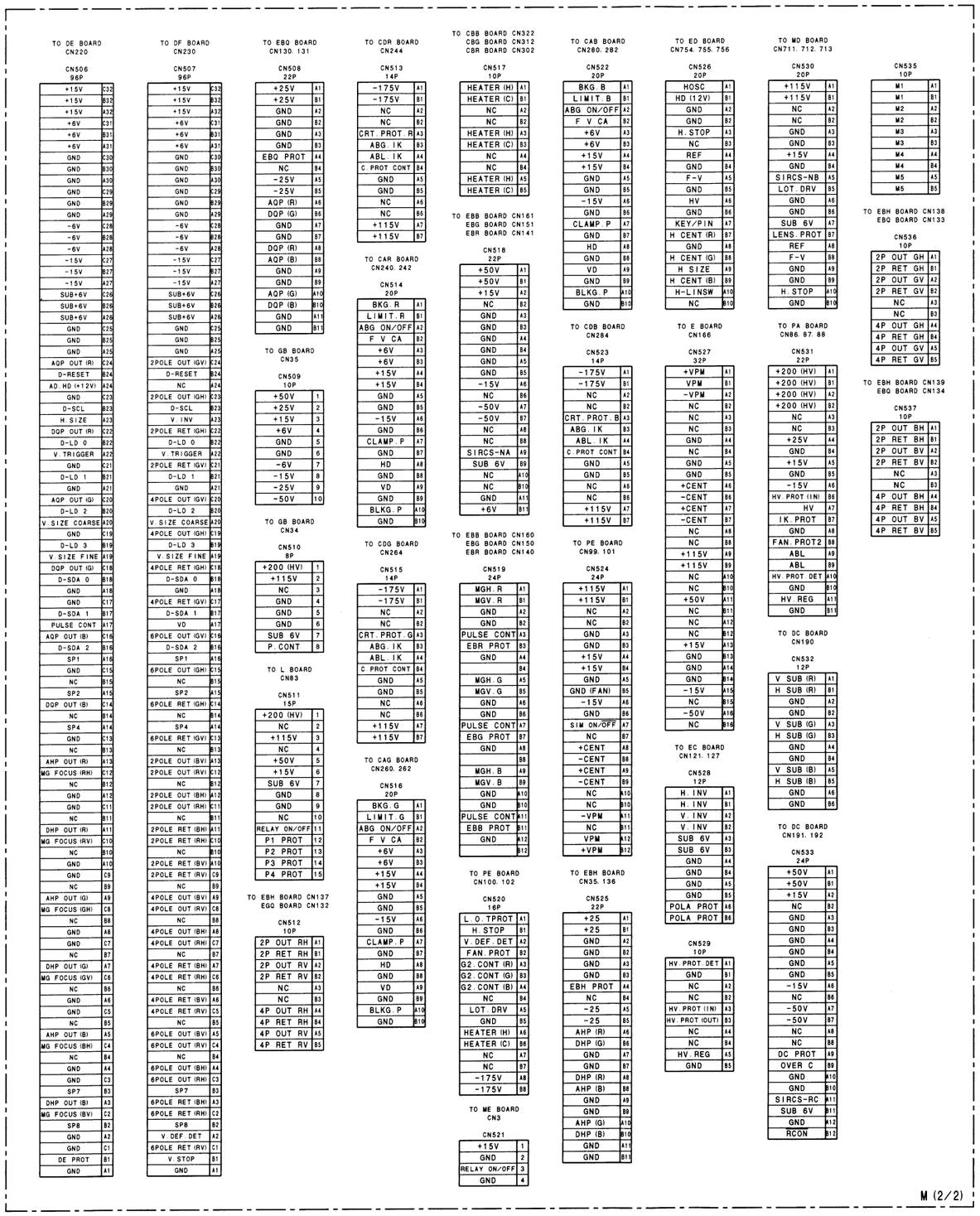

FRAME (9/11) WIRING

1

2

3

4

5

TO M BOARD CN500 — CN600 96P

GND	C32
GND	B32
GND	A32
SIRCS-RC	C31
RCON	B31
GND	A31
	C30
SIRCS NB	B30
GND	A30
	C29
	B29
SIRCS NA	A29
GND	C28
GND	B28
GND	A28
HV PROT (OUT)	C27
LOT PROT	B27
IK	A27
	C26
LENS PROT	B26
SUB PROT	A26
CRT PROT R	C25
CRT PROT G	B25
CRT PROT B	A25
DA PROT	C24
DB PROT	B24
DD PROT	A24
DE PROT	C23
H STOP	B23
V STOP	A23
EBR PROT	C22
EBG PROT	B22
EBB PROT	A22
P1 PROT	C21
P2 PROT	B21
P3 PROT	A21
P4 PROT	C20
FAN PROT	B20
POLA PROT	A20
EBG PROT	C19
EBH PROT	B19
FAN2 PROT	A19
	C18
P CONT	B18
P CONT	A18
GND	C17
GND	B17
GND	A17
HD	C16
GND	B16
VD	A16
HS	C15
GND	B15
VS	A15
GND	C14
GND	B14
GND	A14
	C13
ABL	B13
F-V	A13
	C12
GND	B12
GND	A12
SUB+6V	C11
SUB+6V	B11
SUB+6V	A11
SUB+6V	C10
SUB+6V	B10
SUB+6V	A10
+6V	C9
+6V	B9
+6V	A9
+6V	C8
+6V	B8
+6V	A8
GND	C7
GND	B7
GND	A7
GND	C6
GND	B6
GND	A6
-6V	C5
-6V	B5
-6V	A5
GND	C4
GND	B4
GND	A4
-15V	C3
-15V	B3
-15V	A3
-15V	C2
-15V	B2
-15V	A2
GND	C1
GND	B1
GND	A1

TO M BOARD CN501 — CN601 96P

+15V	C32
+15V	B32
+15V	A32
+15V	C31
+15V	B31
+15V	A31
GND	C30
GND	B30
GND	A30
GND	C29
GND	B29
GND	A29
GND	C28
GND	B28
GND	A28
GND	C27
GND	B27
GND	A27
CLAMP P	C26
GND	B26
BLKG P	A26
GND	C25
GND	B25
GND	A25
ABL IK-R	C24
ABL IK-G	B24
ABL IK-B	A24
ABG-R	C23
ABG-G	B23
ABG-B	A23
LIMIT-R	C22
LIMIT-G	B22
LIMIT-B	A22
DRV-R	C21
DRV-G	B21
DRV-B	A21
BKG-R	C20
BKG-G	B20
BKG-B	A20
ON/OFF-R	C19
ON/OFF-G	B19
ON/OFF-B	A19
	C18
ABG ON/OFF	B18
CONTR	A18
GND	C17
GND	B17
GND	A17
B MOD	C16
G MOD	B16
R MOD	A16
GND	C15
GND	B15
GND	A15
GND	C14
GND	B14
GND	A14
M1	C13
D-RESET	B13
D-SCL	A13
M2	C12
D-LD0	B12
D-SDA0	A12
M3	C11
D-LD1	B11
D-SDA1	A11
M4	C10
D-LD2	B10
D-SDA2	A10
M5	C9
D-LD3	B9
GND	A9
I2C-SCL1	C8
	B8
GND	A8
I2C-SDA1	C7
CONT SP	B7
OVER C	A7
RT CONT	C6
AFC CONT	B6
D-VIDEO/RGB	A6
FH LIMIT	C5
H INV	B5
V INV	A5
	C4
	B4
LIN SW	A4
	C3
	B3
	A3
G2 CONT-R	C2
G2 CONT-G	B2
G2 CONT-B	A2
GND	C1
GND	B1
GND	A1

TO YA BOARD CN420 — CN602 96P

GND	A1
GND	B1
GND	C1
SIRCS RC	A2
RCON	B2
	C2
	A3
SIRCS NB	B3
	C3
SIRCS CCG	A4
	B4
SIRCS NA	C4
GND	A5
GND	B5
GND	C5
	A6
	B6
	C6
LINK	A7
	B7
	C7
GND	A8
GND	B8
GND	C8
HV PROT	A9
LOT PROT	B9
SIGMA IK	C9
	A10
LENS PROT	B10
SUB PROT	C10
CRT PROT R	A11
CRT PROT G	B11
CRT PROT B	C11
DA PROT	A12
DB PROT	B12
DD PROT	C12
DE PROT	A13
H STOP	B13
V STOP	C13
EBR PROT	A14
EBG PROT	B14
EBB PROT	C14
P1 PROT	A15
P2 PROT	B15
P3 PROT	C15
P4 PROT	A16
FAN PROT	B16
POLA PROT	C16
BA PROT	A17
IK PROT	B17
FAN2 PROT	C17
IFB-B PROT	A18
IFB-C PROT	B18
EBH PROT	C18
EBG PROT	A19
	B19
P CONT	C19
GND	A20
GND	B20
H SYNC (R) 2	C20
H-SYNC	A21
	B21
V-SYNC	C21
	A22
S ON G	B22
	C22
H-SYNC (R)	A23
	B23
V-SYNC (R)	C23
	A24
S ON G (R)	B24
	C24
HD	A25
	B25
VD	C25
HS	A26
	B26
VS	C26
GND	A27
GND	B27
GND	C27
BLKG P	A28
SCP	B28
CLAMP P	C28
GND	A29
GND	B29
GND	C29
SUB+6V	A30
SUB+6V	B30
SUB+6V	C30
-6V	A31
+6V	B31
+6V	C31
GND	A32
GND	B32
GND	C32

TO YA BOARD CN421 — CN603 96P

GND	A1
GND	B1
GND	C1
+15V	A2
	B2
TEST IRE	C2
	A3
OSD-R	B3
OSD-R	C3
	A4
OSD-G	B4
OSD-G	C4
	A5
OSD-B	B5
OSD-B	C5
	A6
OSD-V	B6
OSD-V	C6
	A7
OSD-BRT	B7
OSD-BRT	C7
GND	A8
GND	B8
GND	C8
	A9
I2C-SDA1	B9
I2C-SCL1	C9
	A10
I2C-SDA2	B10
I2C-SCL2	C10
GND	A11
GND	B11
GND	C11
M1	A12
D-RESET	B12
D-SCL	C12
M2	A13
D-LD0	B13
D-SDA0	C13
M3	A14
D-LD1	B14
D-SDA1	C14
M4	A15
D-LD2	B15
D-SDA2	C15
M5	A16
D-LD3	B16
	C16
GND	A17
GND	B17
GND	C17
	A18
CONT SP	B18
OVER C	C18
RT CONT	A19
AFC CONT	B19
D-VIDEO/RGB	C19
FH LIMIT	A20
H INV	B20
V INV	C20
	A21
	B21
LIN SW	C21
GND	A22
GND	B22
GND	C22
G2CONT-R	A23
G2CONT-G	B23
G2CONT-B	C23
ABG-R	A24
ABG-G	B24
ABG-B	C24
GND	A25
GND	B25
GND	C25
RGB/VIDEO	A26
BOARD1 B	B26
BOARD1 C	C26
VIDEO/YC	A27
BOARD2 B	B27
BOARD2 C	C27
	A28
BOARD/NOT-B	B28
BOARD/NOT-C	C28
IN/OUT	A29
SEL B	B29
SEL C	C29
CODE1	A30
	B30
	C30
CODE2	A31
IFB-SDA	B31
IFB-SCL	C31
GND	A32
GND	B32
GND	C32

TO BA BOARD CN340 — CN604 96P

	A1
	B1
	C1
	A2
	B2
	C2
	A3
	B3
	C3
	A4
	B4
	C4
GND	A5
GND	B5
GND	C5
	A6
	B6
	C6
	A7
	B7
LINK	C7
GND	A8
GND	B8
GND	C8
	A9
	B9
	C9
H SYNC (R) 2	A10
	B10
	C10
GND	A11
GND	B11
GND	C11
V-SYNC	A12
GND	B12
H-SYNC	C12
GND	A13
S ON G	B13
GND	C13
V-SYNC (R)	A14
GND	B14
H-SYNC (R)	C14
GND	A15
S ON G (R)	B15
GND	C15
GND	A16
GND	B16
GND	C16
I2C-SDA1	A17
I2C-SCL1	B17
	C17
I2C-SDA2	A18
I2C-SCL2	B18
	C18
GND	A19
GND	B19
GND	C19
ABL IK-R	A20
ABL IK-G	B20
ABL IK-B	C20
	A21
	B21
ABG ON/OFF	C21
LIMIT-R	A22
LIMIT-G	B22
LIMIT-B	C22
DRV-R	A23
DRV-G	B23
DRV-B	C23
BKG-R	A24
BKG-G	B24
BKG-B	C24
ON/OFF-R	A25
ON/OFF-G	B25
ON/OFF-B	C25
F-V	A26
ABL	B26
C.PROT CONT	C26
GND	A27
GND	B27
GND	C27
CLAMP P	A28
SCP	B28
BLKG P	C28
BA PROT	A29
IK PROT	B29
IN/OUT	C29
SUB+6V	A30
SUB+6V	B30
SUB+6V	C30
+6V	A31
+6V	B31
+6V	C31
-6V	A32
-6V	B32
-6V	C32

TO BA BOARD CN341 — CN605 96P

-15V	A1
-15V	B1
-15V	C1
GND	A2
GND	B2
GND	C2
+15V	A3
+15V	B3
+15V	C3
R MOD	A4
G MOD	B4
B MOD	C4
GND	A5
GND	B5
GND	C5
TEST IRE	A6
HD	B6
VD	C6
OSD-R	A7
OSD-R	B7
	C7
OSD-G	A8
OSD-G	B8
	C8
OSD-B	A9
OSD-B	B9
	C9
OSD-V	A10
OSD-V	B10
	C10
OSD-BRT	A11
OSD-BRT	B11
	C11
GND	A12
GND	B12
GND	C12
D-SCL	A13
D-RESET	B13
GND	C13
D-SDA0	A14
D-LD0	B14
GND	C14
GND	A15
GND	B15
GND	C15
SIG RED	A16
SIG RED	B16
SIG RED	C16
GND	A17
GND	B17
GND	C17
SIG GREEN	A18
SIG GREEN	B18
SIG GREEN	C18
GND	A19
GND	B19
GND	C19
SIG BLUE	A20
SIG BLUE	B20
SIG BLUE	C20
GND	A21
GND	B21
GND	C21
GND	A22
GND	B22
GND	C22
GND	A23
VS-IFB	B23
VS-IFB	C23
GND	A24
GND	B24
GND	C24
RED	A25
RED	B25
RED	C25
GND	A26
GND	B26
GND	C26
GREEN	A27
GREEN	B27
GREEN	C27
GND	A28
GND	B28
GND	C28
BLUE	A29
BLUE	B29
BLUE	C29
GND	A30
GND	B30
GND	C30
SUB+5V	A31
	B31
	C31
SUB+5V	A32
+12V	B32
+12V	C32

TO BC BOARD CN380 — CN606 96P

+6V	A1
RED	B1
RED	C1
+6V	A2
GND	B2
GND	C2
+5V	A3
GREEN	B3
GREEN	C3
+5V	A4
GND	B4
GND	C4
GND	A5
BLUE	B5
BLUE	C5
IN/OUT	A6
HS-IFB	B6
HS-IFB	C6
SEL-B	A7
VS-IFB	B7
VS-IFB	C7
RED OUT-B	A8
RED OUT-B	B8
RED OUT-B	C8
GND	A9
GND	B9
GND	C9
GREEN OUT-B	A10
GREEN OUT-B	B10
GREEN OUT-B	C10
GND	A11
GND	B11
GND	C11
BLUE OUT-B	A12
BLUE OUT-B	B12
BLUE OUT-B	C12
GND	A13
GND	B13
GND	C13
CODE2-C	A14
CODE2	B14
VS OUT-B	C14
CODE2-B	A15
GND	B15
HS OUT-B	C15
HD/CSYNC-B	A16
HD/CSYNC-B	B16
HD/CSYNC-B	C16
VD-B	A17
VD-B	B17
VD-B	C17
GND	A18
GND	B18
GND	C18
R/R-Y-B	A19
R/R-Y-B	B19
R/R-Y-B	C19
GND	A20
GND	B20
GND	C20
G/Y-B	A21
G/Y-B	B21
G/Y-B	C21
GND	A22
GND	B22
GND	C22
B/B-Y-B	A23
B/B-Y-B	B23
B/B-Y-B	C23
GND	A24
GND	B24
GND	C24
HD/CSYNC-C	A25
HD/CSYNC-C	B25
HD/CSYNC-C	C25
VD-C	A26
VD-C	B26
VD-C	C26
GND	A27
GND	B27
GND	C27
R/R-Y-C	A28
R/R-Y-C	B28
R/R-Y-C	C28
GND	A29
GND	B29
GND	C29
G/Y-C	A30
G/Y-C	B30
G/Y-C	C30
GND	A31
GND	B31
GND	C31
B/B-Y-C	A32
B/B-Y-C	B32
B/B-Y-C	C32

TO MB BOARD CN701 — CN607 96P

BOARD/NOT-B	A1
GND	B1
GND	C1
IFB PROT-B	A2
+5V	B2
+5V	C2
GND	A3
RED OUT-B	B3
RED OUT-B	C3
+12V	A4
+12V	B4
+12V	C4
BOARD1-B	A5
GREEN OUT-B	B5
GREEN OUT-B	C5
BOARD2-B	A6
GND	B6
GND	C6
CODE1	A7
BLUE OUT-B	B7
BLUE OUT-B	C7
RGB/VIDEO	A8
HS OUT-B	B8
GND	C8
VIDEO/YC	A9
VS OUT-B	B9
GND	C9
HD/CSYNC-B	A10
HD/CSYNC-B	B10
HD/CSYNC-B	C10
GND	A11
GND	B11
GND	C11
VD-B	A12
VD-B	B12
VD-B	C12
GND	A13
GND	B13
GND	C13
IFB-SCL	A14
IFB-SDA	B14
CODE2-B	C14
GND	A15
GND	B15
GND	C15
R/R-Y-B	A16
R/R-Y-B	B16
R/R-Y-B	C16
GND	A17
GND	B17
GND	C17
SIRCS CCG	A18
IN/OUT	B18
SEL B	C18
GND	A19
GND	B19
GND	C19
G/Y-B	A20
G/Y-B	B20
G/Y-B	C20
SUB+5V	A21
SUB+5V	B21
SUB+5V	C21
GND	A22
GND	B22
GND	C22
B/B-Y-B	A23
B/B-Y-B	B23
B/B-Y-B	C23
GND	A24
GND	B24
GND	C24
HD/CSYNC-C	A25
HD/CSYNC-C	B25
HD/CSYNC-C	C25
VD-C	A26
VD-C	B26
VD-C	C26
GND	A27
GND	B27
GND	C27
R/R-Y-C	A28
R/R-Y-C	B28
R/R-Y-C	C28
GND	A29
GND	B29
GND	C29
G/Y-C	A30
G/Y-C	B30
G/Y-C	C30
GND	A31
GND	B31
GND	C31
B/B-Y-C	A32
B/B-Y-C	B32
B/B-Y-C	C32

TO MC BOARD CN703 — CN608 96P

BOARD/NOT-C	A1
GND	B1
GND	C1
IFB PROT-C	A2
+5V	B2
+5V	C2
GND	A3
RED OUT-C	B3
RED OUT-C	C3
+12V	A4
+12V	B4
+12V	C4
BOARD1-C	A5
GREEN OUT-C	B5
GREEN OUT-C	C5
BOARD2-C	A6
GND	B6
GND	C6
CODE1	A7
BLUE OUT-C	B7
BLUE OUT-C	C7
RGB/VIDEO	A8
HS OUT-C	B8
GND	C8
VIDEO/YC	A9
VS OUT-C	B9
GND	C9
	A10
	B10
	C10
GND	A11
GND	B11
GND	C11
	A12
	B12
	C12
GND	A13
GND	B13
GND	C13
IFB-SCL	A14
IFB-SDA	B14
CODE2-C	C14
GND	A15
GND	B15
GND	C15
	A16
	B16
	C16
GND	A17
GND	B17
GND	C17
SIRCS CCG	A18
IN/OUT	B18
SEL C	C18
GND	A19
GND	B19
GND	C19
	A20
	B20
	C20
SUB+5V	A21
SUB+5V	B21
SUB+5V	C21
GND	A22
GND	B22
GND	C22
	A23
	B23
	C23
GND	A24
GND	B24
GND	C24
HD/CSYNC-C	A25
HD/CSYNC-C	B25
HD/CSYNC-C	C25
VD-C	A26
VD-C	B26
VD-C	C26
GND	A27
GND	B27
GND	C27
R/R-Y-C	A28
R/R-Y-C	B28
R/R-Y-C	C28
GND	A29
GND	B29
GND	C29
G/Y-C	A30
G/Y-C	B30
G/Y-C	C30
GND	A31
GND	B31
GND	C31
B/B-Y-C	A32
B/B-Y-C	B32
B/B-Y-C	C32

J1 RED
J2 GREEN
J3 BLUE

MA

CN700 INPUT-B 96PIN L-F

BOARD/NOT-B	A1
NC	B1
GND	C1
IFB PROT-B	A2
+5V	B2
NC	C2
GND	A3
RED OUT-B	B3
RED OUT-B	C3
+12V	A4
+12V	B4
+12V	C4
NC	A5
GREEN OUT-B	B5
GREEN OUT-B	C5
GND	A6
NC	B6
GND	C6
NC	A7
BLUE OUT-B	B7
BLUE OUT-B	C7
NC	A8
HS OUT-B	B8
NC	C8
GND	A9
NC	B9
GND	C9
NC	A10
VS OUT-B	B10
NC	C10
GND	A11
BOARD1-B	B11
GND	C11
HD/CSYNC-B	A12
HD/CSYNC-B	B12
HD/CSYNC-B	C12
NC	A13
BOARD2-B	B13
NC	C13
VD-B	A14
VD-B	B14
VD-B	C14
NC	A15
GND	B15
NC	C15
GND	A16
CODE1	B16
GND	C16
RGB/VIDEO	A17
GND	B17
VIDEO/YC	C17
NC	A18
IFB-SCL	B18
GND	C18
GND	A19
IFB-SDA	B19
SEL-B	C19
GND	A20
GND	B20
GND	C20
R/R-Y-B	A21
R/R-Y-B	B21
R/R-Y-B	C21
GND	A22
GND	B22
GND	C22
NC	A23
IN/OUT	B23
SIRCS-CCG	C23
GND	A24
GND	B24
GND	C24
G/Y-B	A25
G/Y-B	B25
G/Y-B	C25
GND	A26
GND	B26
GND	C26
NC	A27
CODE2-B	B27
SUB+5V	C27
GND	A28
GND	B28
GND	C28
B/B-Y-B	A29
B/B-Y-B	B29
B/B-Y-B	C29
GND	A30
GND	B30
GND	C30
NC	A31
NC	B31
NC	C31
GND	A32
GND	B32
GND	C32

TO MA BOARD CN607 INPUT-B 96PIN L-M

A1	BOARD/NOT-B
B1	GND
C1	GND
A2	IFB PROT-B
B2	+5V
C2	+5V
A3	GND
B3	RED OUT-B
C3	RED OUT-B
A4	+12V
B4	+12V
C4	+12V
A5	BOARD1-B
B5	GREEN OUT-B
C5	GREEN OUT-B
A6	BOARD2-B
B6	GND
C6	GND
A7	CODE1
B7	BLUE OUT-B
C7	BLUE OUT-B
A8	RGB/VIDEO
B8	HS OUT-B
C8	GND
A9	VIDEO/YC
B9	VS OUT-B
C9	GND
A10	HD/CSYNC-B
B10	HD/CSYNC-B
C10	HD/CSYNC-B
A11	GND
B11	GND
C11	GND
A12	VD-B
B12	VD-B
C12	VD-B
A13	GND
B13	GND
C13	GND
A14	IFB-SCL
B14	IFB-SDA
C14	CODE2-B
A15	GND
B15	GND
C15	GND
A16	R/R-Y-B
B16	R/R-Y-B
C16	R/R-Y-B
A17	GND
B17	GND
C17	GND
A18	SIRCS-CCG
B18	IN/OUT-B
C18	SEL-B
A19	GND
B19	GND
C19	GND
A20	G/Y-B
B20	G/Y-B
C20	G/Y-B
A21	SUB+5V
B21	SUB+5V
C21	SUB+5V
A22	GND
B22	GND
C22	GND
A23	B/B-Y-B
B23	B/B-Y-B
C23	B/B-Y-B
A24	GND
B24	GND
C24	GND
A25	HD/CSYNC-C
B25	HD/CSYNC-C
C25	HD/CSYNC-C
A26	VD-C
B26	VD-C
C26	VD-C
A27	GND
B27	GND
C27	GND
A28	R/R-Y-C
B28	R/R-Y-C
C28	R/R-Y-C
A29	GND
B29	GND
C29	GND
A30	G/Y-C
B30	G/Y-C
C30	G/Y-C
A31	GND
B31	GND
C31	GND
A32	B/B-Y-C
B32	B/B-Y-C
C32	B/B-Y-C

MB

A B C D E F G H

FRAME (10/11) WIRING

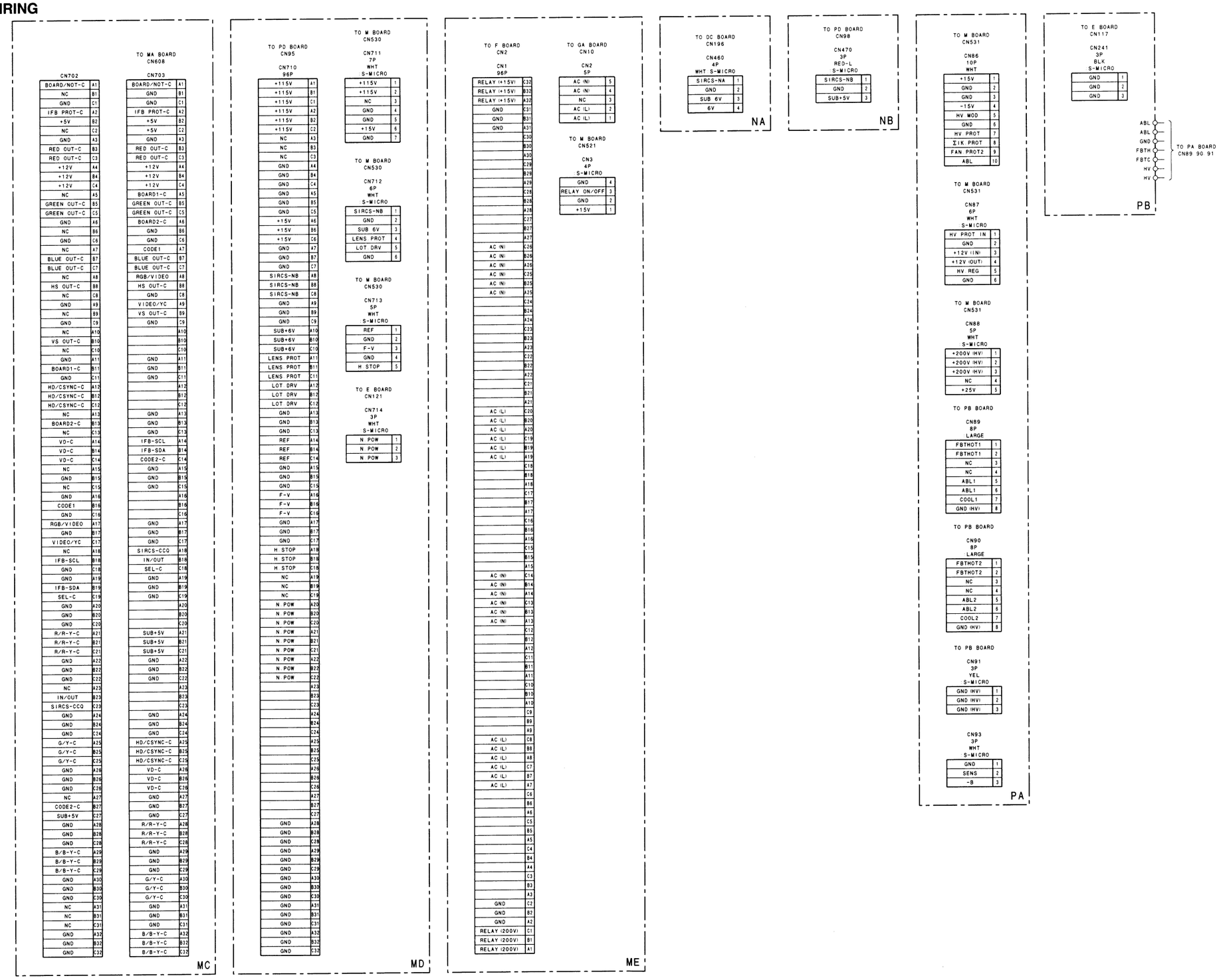

FRAME (11/11) WIRING

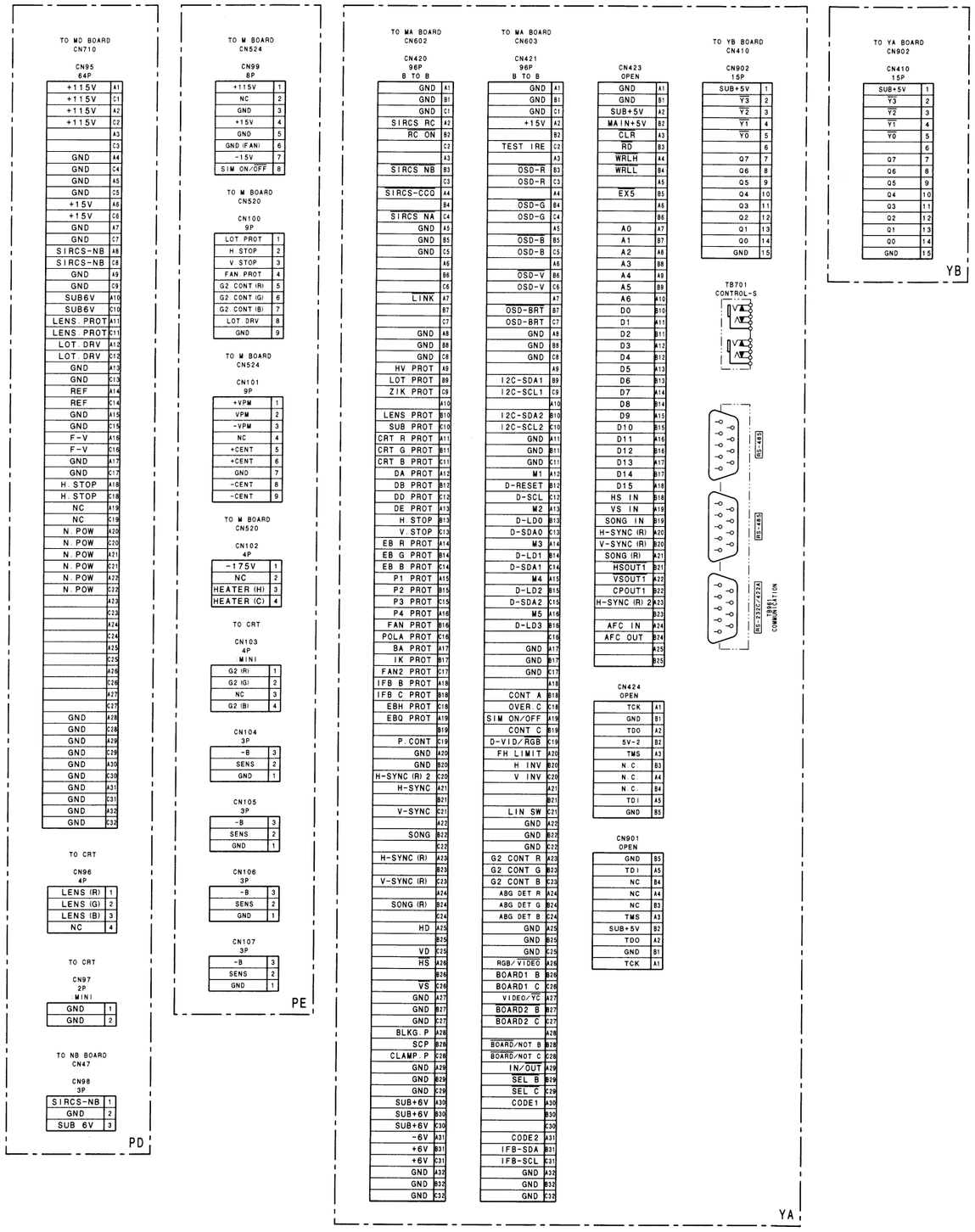

10-2. SCHEMATIC DIAGRAMS/PRINTED WIRING BOARDS

Note:

- All capacitors are in μF unless otherwise noted.
  PF: 50 WV or less are not indicated except for electorlytics.
- All electrolytics are in 50 V unless otherwise specified.
- All resistors are in ohms, 1/4 W in resistance, 1/10 W in chip resistance.
  kΩ = 100, MΩ = 1000 kΩ
- FW : nonflammable resistor.
- △ : internal component.
- ▭ : panel designation, or adjustment for repair.
- All variable and adjustable resistors have characteristic curve B, unless otherwise noted.
- METAL FILM (: RN) resister in 0.5 %, 1/4 W unless otherwise specified.
- The components identified by ⧗ in this basic schematic diagram have been carefully factory-selected for each set in order to satisfy regulations regarding X-ray radiation.
  Should replacement be requited, replace only with the value originally used.
- When replacing components identified by ◪, make the necessary adjustments indicated, If results do not meet the specified value, change the component identified by ⧗ and repeat the adjustment until the specified value is achieved.
  (Refer to ⧗ RV100, ⧗ RV250 on page 4-1, ⧗ RV965 on page 4-2.)

Board	Part replaced (◪)	Adjustment (⧗)
PA	C155, C157 R109, R111, R112, R114, R117, R118, R104, R105, R106, R107, R108, R120, R121, R157, R158 RV101, RV150 IC101, IC102, IC100, IC152, IC153 PH500	RV100 (HV. REGULATOR)
	C250 R250, R251, R252, R253, R256, R257, R258, R259, R260 D252, D253 IC250, IC251	RV250 (HV. PROTECTOR)
	C607, C608, C610, C611 L601, L602, L603, L604	RV100 (HV. REGULATOR) RV250 (HV. PROTECTOR)
PB	FBT10, FBT11	
CDR CDG CDB	R971, R972, R973, R974, R975 D960, D965 IC961, IC971	RV965 (CRT PROTECTOR)
	R960, R967, R1007 IC990	OPERATION CHECK (IK PROTECTOR)
BA	R839, R841, R847, R855, R848, R870, R873, R872, R877, R876 D806 IC804	

The components identified by mark ⚠ are critical for safety.
Replace only with part number specified.

Les composants identifies par une marque ⚠ sont critiques pour la securite. Ne les remplacer que par une piece portant le numero specifie.

- When the power supply block has been replaced, check that the +B MAX voltage is within 200 ± 2V.
- All voltages are in V.
- Voltage variations may be noted due to normal production tolerances.
- Readings are taken with Composite Video and Component (R.G.B. HD, VD) color-bar signal input from color-bar pattern generator.
- Voltage are dc with respect to ground unless otherwise noted.
- no mark : Composite Video signal and common voltage.
  ( ) : Component (R.G.B. HD, VD) signal receved.
- ▭ V : B+ bus.
- ▭ V : B– bus.
- ⇨ : signal path.
- Circled numbers are waveform reference.

Reference information

RESISTOR : RN METAL FILM
: RC SOLID
: FPRD NONFLAMMABLE CARBON
: FUSE NONFLAMMABLE FUSIBLE
: RS NONFLAMMABLE METAL OXIDE
: RB NONFLAMMABLE CEMENT
: RW NONFLAMMABLE WIREWOUND
COIL : LF-8L MICRO INDUCTOR
CAPACITOR : TA TANTALUM
: PS STYROL
: PP POLYPROPYLENE
: PT MYLAR
: MPS METALIZED POLYESTER
: MPP METALIZED POLYPROPYLENE
: ALB BIPOLAR
: ALT HIGH TEMPERATURE
: ALR HIGH RIPPLE

BD BOARD (EXCEPT VPH-G90E)

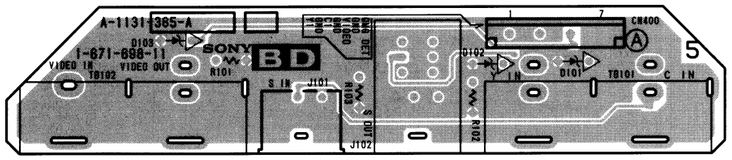

BD -A SIDE-
SUFFIX: -11

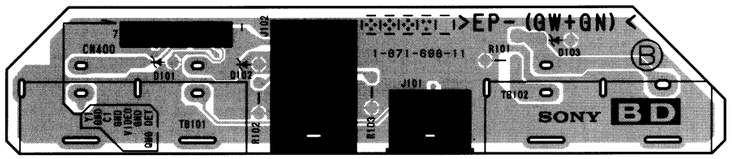

BD -B SIDE-
SUFFIX: -11

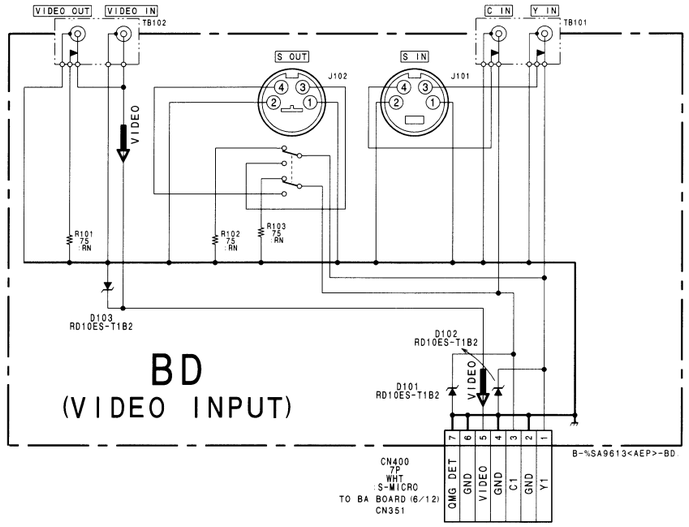

BA BOARD

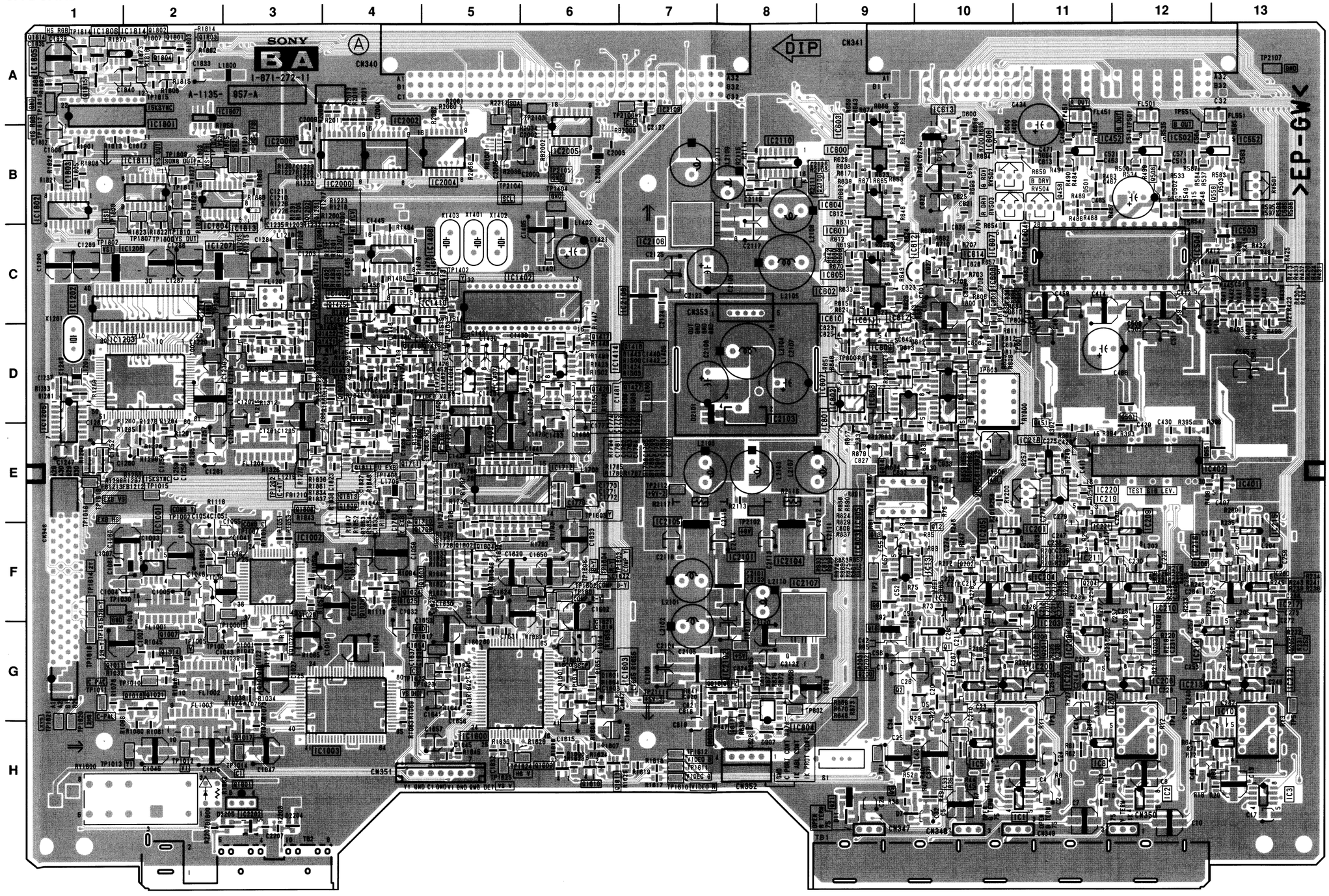

BA -A SIDE-
SUFFIX: -11

BA BOARD (A SIDE)

D4	H-9	IC1408	C-5	Q1609	H-6	TP1810	C-2
D5	G-10	IC1409	C-4	Q1610	H-6	TP1811	B-2
D7	H-9	IC1410	C-5	Q1611	H-6	TP1812	B-1
D11	H-9	IC1411	C-4	Q1709	F-5	TP1813	A-1
D501	B-11	IC1413	C-5	Q1710	E-5	TP1814	A-1
D502	B-12	IC1414	D-6	Q1711	E-4	TP1815	A-2
D503	B-13	IC1600	H-5	Q1801	A-2	TP2101	G-8
D600	A-10	IC1603	G-7	Q1802	A-2	TP2102	F-8
D806	G-8	IC1712	E-6	Q1803	A-2	TP2103	A-6
D807	H-8	IC1801	A-2	Q1804	A-2	TP2104	B-5
D810	C-11	IC1802	B-1	Q1807	D-4	TP2105	B-6
D811	D-10	IC1803	B-1	Q1808	E-3	TP2106	A-7
D812	D-10	IC1804	C-2	Q1809	E-4	TP2107	A-13
D813	D-9	IC1805	A-1	Q1811	E-4	TP2111	G-7
D1001	G-3	IC1806	A-1	Q1812	D-4	TP2112	E-7
D1600	H-2	IC1807	A-3	Q1813	E-4		
D1601	G-6	IC1811	B-2	Q1814	A-1		
D2101	D-7	IC1813	C-3	Q1815	A-1		
D2204	H-3	IC1814	A-2	Q2100	B-9		
D2205	H-3	IC2000	B-4				
		IC2002	A-4	RV200	E-10		
IC1	H-11	IC2004	B-5	RV501	B-13		
IC2	H-12	IC2005	B-6	RV502	B-10		
IC3	H-13	IC2008	B-3	RV503	B-10		
IC5	H-10	IC2101	F-8	RV504	B-11		
IC8	H-11	IC2102	G-8	RV800	E-10		
IC10	G-13	IC2103	D-8				
IC11	F-10	IC2104	F-8	TP1	H-9		
IC13	F-10	IC2105	F-7	TP3	H-11		
IC20	G-11	IC2106	C-7	TP4	H-12		
IC201	F-11	IC2107	F-8	TP5	H-13		
IC202	G-11	IC2108	C-7	TP451	A-11		
IC203	G-11	IC2109	A-7	TP501	A-12		
IC204	F-11	IC2110	B-8	TP551	A-12		
IC205	F-10	IC2002	H-3	TP800	D-9		
IC206	G-12			TP801	D-11		
IC207	G-11	Q1	G-10	TP802	G-8		
IC208	G-11	Q2	G-9	TP803	D-10		
IC209	F-12	Q5	H-9	TP804	C-11		
IC210	F-12	Q8	F-9	TP1000	G-3		
IC211	F-11	Q12	F-10	TP1001	G-2		
IC212	G-13	Q13	F-9	TP1002	E-2		
IC213	G-12	Q18	G-9	TP1005	G-2		
IC214	G-12	Q21	H-9	TP1007	F-3		
IC215	F-13	Q200	G-9	TP1010	G-2		
IC216	F-12	Q201	G-11	TP1011	G-1		
IC217	F-13	Q202	F-10	TP1012	H-2		
IC218	E-11	Q203	G-12	TP1013	H-1		
IC219	E-11	Q204	F-11	TP1014	H-3		
IC220	E-11	Q205	G-13	TP1015	E-2		
IC221	F-11	Q208	F-12	TP1030	F-1		
IC401	E-13	Q451	E-11	TP1200	C-4		
IC402	E-13	Q458	B-11	TP1201	D-4		
IC404	C-11	Q501	D-12	TP1202	E-3		
IC452	B-11	Q508	B-12	TP1204	C-2		
IC502	B-12	Q551	E-12	TP1400	E-4		
IC503	C-13	Q558	B-13	TP1401	E-5		
IC504	C-12	Q801	C-10	TP1402	C-5		
IC552	B-13	Q809	H-7	TP1403	D-5		
IC600	B-9	Q810	G-7	TP1404	B-6		
IC601	C-9	Q811	H-8	TP1405	E-4		
IC602	C-9	Q812	G-8	TP1406	E-4		
IC603	B-9	Q814	E-9	TP1407	E-5		
IC604	B-9	Q1007	G-2	TP1601	F-6		
IC605	C-9	Q1010	G-3	TP1602	F-6		
IC606	B-10	Q1011	G-1	TP1603	F-6		
IC607	C-10	Q1014	G-2	TP1604	F-6		
IC608	C-10	Q1017	H-3	TP1605	E-6		
IC612	C-9	Q1018	G-2	TP1606	F-6		
IC613	A-10	Q1021	G-2	TP1610	H-7		
IC614	C-10	Q1024	F-4	TP1611	H-7		
IC801	E-9	Q1025	F-4	TP1612	H-7		
IC802	D-9	Q1026	F-4	TP1613	G-6		
IC803	F-9	Q1028	G-3	TP1614	F-1		
IC804	H-8	Q1029	F-3	TP1615	G-1		
IC805	E-9	Q1201	B-3	TP1616	G-1		
IC807	D-9	Q1202	B-3	TP1617	G-5		
IC808	D-9	Q1204	C-3	TP1618	E-1		
IC809	D-9	Q1205	C-3	TP1619	E-1		
IC810	C-9	Q1208	C-3	TP1620	H-1		
IC811	C-9	Q1413	D-4	TP1621	H-1		
IC812	C-9	Q1416	D-7	TP1622	G-4		
IC1001	E-2	Q1417	D-6	TP1623	G-5		
IC1002	F-3	Q1419	D-5	TP1624	H-6		
IC1003	H-4	Q1421	D-4	TP1625	H-5		
IC1202	C-1	Q1422	D-4	TP1800	B-1		
IC1203	D-1	Q1425	C-4	TP1801	B-3		
IC1205	D-1	Q1426	D-6	TP1802	C-1		
IC1207	C-2	Q1427	D-7	TP1803	B-2		
IC1208	C-2	Q1429	D-4	TP1804	B-2		
IC1402	C-5	Q1601	H-3	TP1805	B-3		
IC1403	E-5	Q1602	F-5	TP1806	C-2		
IC1404	D-5	Q1603	F-5	TP1807	C-2		
IC1407	D-5	Q1604	F-4	TP1809	B-2		

BA BOARD

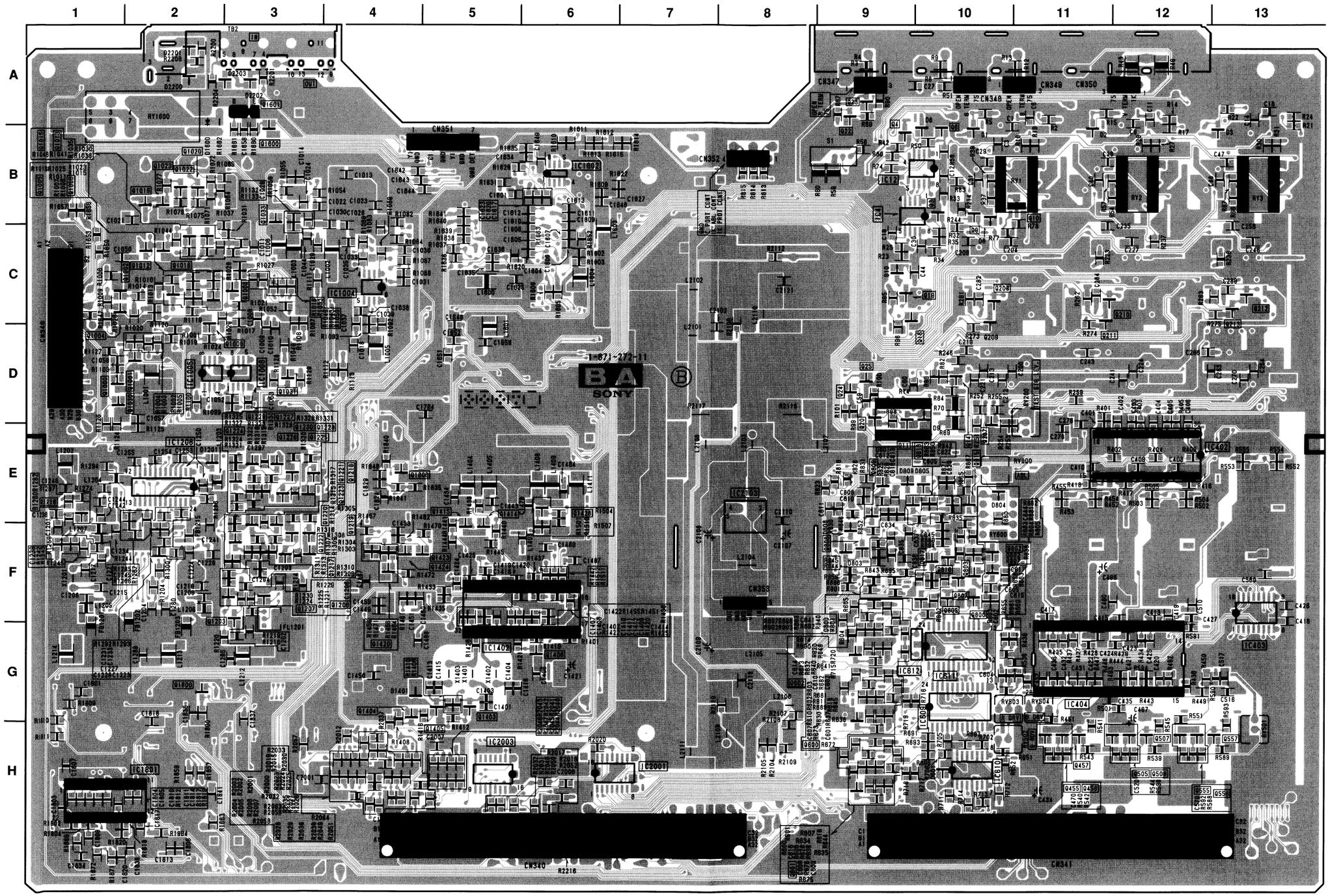

BA -B SIDE-
SUFFIX: -11

BA BOARD (B SIDE)

D1	B-10	Q1008	C-3
D2	B-11	Q1009	D-3
D3	B-13	Q1012	C-2
D6	C-10	Q1013	B-1
D8	A-10	Q1015	B-1
D9	E-10	Q1016	C-2
D10	C-9	Q1019	B-2
D601	H-10	Q1020	B-2
D800	G-9	Q1022	B-2
D801	E-9	Q1023	B-2
D802	F-10	Q1030	D-2
D803	F-9	Q1031	D-3
D804	E-10	Q1033	B-3
D805	E-10	Q1203	F-2
D808	F-9	Q1206	F-4
D809	E-9	Q1207	F-3
D1201	E-2	Q1217	F-4
D1401	G-4	Q1218	E-1
D1600	B-2	Q1218	E-4
D2200	A-2	Q1219	F-4
D2201	A-2	Q1220	E-4
D2202	A-3	Q1221	E-4
D2203	A-3	Q1222	F-3
		Q1223	E-4
IC12	B-9	Q1224	E-3
IC14	B-9	Q1225	E-3
IC402	E-13	Q1226	E-3
IC403	G-13	Q1227	D-3
IC404	G-11	Q1228	E-4
IC609	G-10	Q1229	D-3
IC610	H-10	Q1230	E-3
IC611	G-10	Q1403	G-5
IC612	G-9	Q1404	G-4
IC1004	C-4	Q1405	H-5
IC1005	D-2	Q1408	G-6
IC1006	D-3	Q1414	E-5
IC1206	E-2	Q1415	E-5
IC1402	G-5	Q1420	G-4
IC1602	B-6	Q1423	F-5
IC1801	H-2	Q1424	F-5
IC2001	H-7	Q1428	E-6
IC2003	H-5	Q1600	B-3
IC2103	E-8	Q1601	A-3
		Q1800	G-2
Q3	B-8	Q1808	E-4
Q4	B-9		
Q8	B-8	RV200	D-11
Q9	C-10	RV501	H-13
Q10	B-11	RV502	H-11
Q11	E-9	RV503	G-10
Q14	E-10	RV504	G-11
Q18	D-10	RV800	E-11
Q19	C-10		
Q20	D-9		
Q22	B-9		
Q23	A-9		
Q24	D-9		
Q25	D-9		
Q207	E-10		
Q208	C-10		
Q209	D-10		
Q210	C-12		
Q211	D-11		
Q212	C-13		
Q213	C-13		
Q455	H-11		
Q456	H-11		
Q457	H-11		
Q505	H-12		
Q506	H-12		
Q507	H-12		
Q555	H-12		
Q556	H-13		
Q557	H-13		
Q600	H-8		
Q601	H-8		
Q602	G-8		
Q800	F-10		
Q802	F-10		
Q803	F-9		
Q805	F-10		
Q807	F-10		
Q808	E-9		
Q809	F-10		
Q813	E-10		
Q815	E-10		
Q816	F-10		
Q817	F-10		
Q1000	D-1		
Q1001	D-2		
Q1002	C-2		
Q1004	D-1		
Q1005	B-1		
Q1006	B-1		

10-17

BA BOARD WAVEFORMS

① RGB 0.7 V p-p (H)	② RGB 0.7 V p-p (H)	③ RGB 0.7 V p-p (H)	④ RGB 4.0 V p-p (V)	⑤ RGB 3.2 V p-p (H)
⑥ RGB 0.7 V p-p (H)	⑦ RGB 0.7 V p-p (H)	⑧ RGB 0.7 V p-p (H)	⑨ RGB 0.7 V p-p (H)	VIDEO 0.9 V p-p (H)
⑩ RGB 0.7 V p-p (H)	VIDEO 0.9 V p-p (H)	⑪ RGB 0.6 V p-p (H)	VIDEO 0.9 V p-p (H)	⑫ RGB 1.3 V p-p (H)
⑬ RGB 1.5 V p-p (H)	⑭ RGB 1.3 V p-p (H)	⑮ 1.0 V p-p (H)	⑯ RGB 2.2 V p-p (V)	⑰ VIDEO 1.6 V p-p (H)
⑱ VIDEO 1.3 V p-p (H)	⑲ VIDEO 1.8 V p-p (H)	⑳ VIDEO 1.1 V p-p (H)	㉑ VIDEO 2.0 V p-p (H)	㉒ VIDEO 1.6 V p-p (H)
㉓ VIDEO 1.3 V p-p (H)	㉔ VIDEO 0.8 V p-p (H)	㉕ VIDEO 0.7 V p-p (H)	㉖ VIDEO 1.3 V p-p (H)	㉗ RGB 0.7 V p-p (H)
㉘ RGB 0.7 V p-p (H)	㉙ RGB 0.7 V p-p (H)	㉚ VIDEO 4.0 V p-p (H)	㉛ VIDEO 3.8 V p-p (V)	㉜ VIDEO 0.9 V p-p (H)
㉝ VIDEO 0.9 V p-p (H)	㉞ VIDEO 0.9 V p-p (H)	㉟ RGB 3.2 V p-p (H)	㊱ RGB 4.0 V p-p (V)	㊲ VIDEO 4.9 V p-p (H)
㊳ 4.9 V p-p (V)	㊴ VIDEO 4.9 V p-p (H)	㊵ 4.6 V p-p (V)	㊶ 4.6 V p-p (V)	㊷ 4.6 V p-p (H)

BA (1/12) BOARD

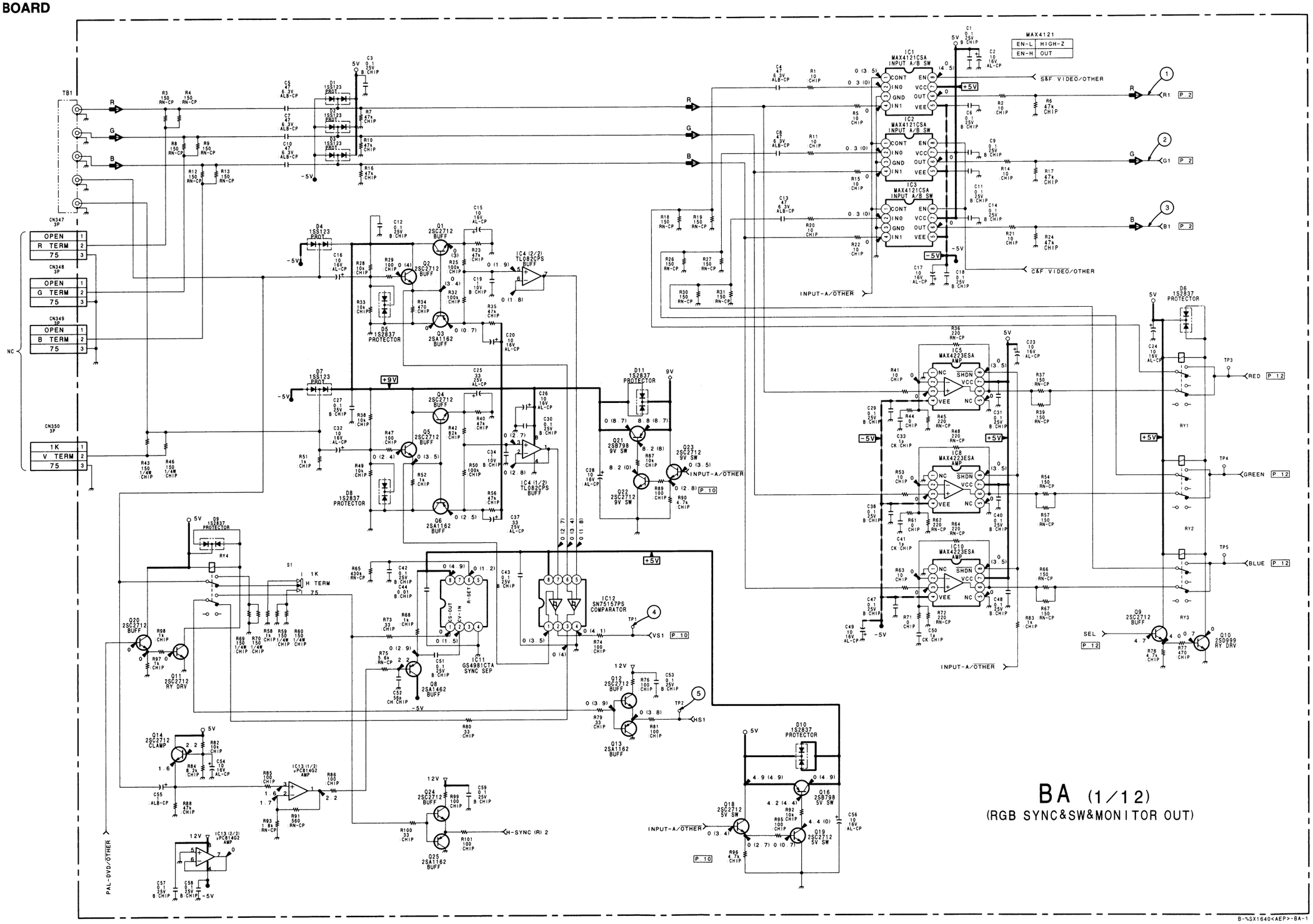
TB1
CN347 3P
OPEN
R TERM
75
CN348 3P
OPEN
G TERM
75
CN349 3P
OPEN
B TERM
75
CN350 3P
1K
V TERM
75
IC1 MAX4121CSA INPUT A/B SW
IC2 MAX4121CSA INPUT A/B SW
IC3 MAX4121CSA INPUT A/B SW
MAX4121
EN-L HIGH-Z
EN-H OUT
S&F VIDEO/OTHER
INPUT-A/OTHER
IC5 MAX4223ESA AMP
IC8 MAX4223ESA AMP
IC10 MAX4223ESA AMP
D6 1S2837 PROTECTOR
RED P 12
GREEN P 12
BLUE P 12
SEL P 12
RY1
RY2
RY3
RY4
IC4 (2/2) TL082CPS BUFF
IC4 (1/2) TL082CPS BUFF
IC12 SN75157PS COMPARATOR
IC11 GS4981CTA SYNC SEP
VS1 P 10
HS1
H-SYNC (R) 2
PAL-DVD/OTHER
BA (1/12)
(RGB SYNC&SW&MONITOR OUT)
B-%SX1640<AEP>-BA-1

BA (2/12) BOARD

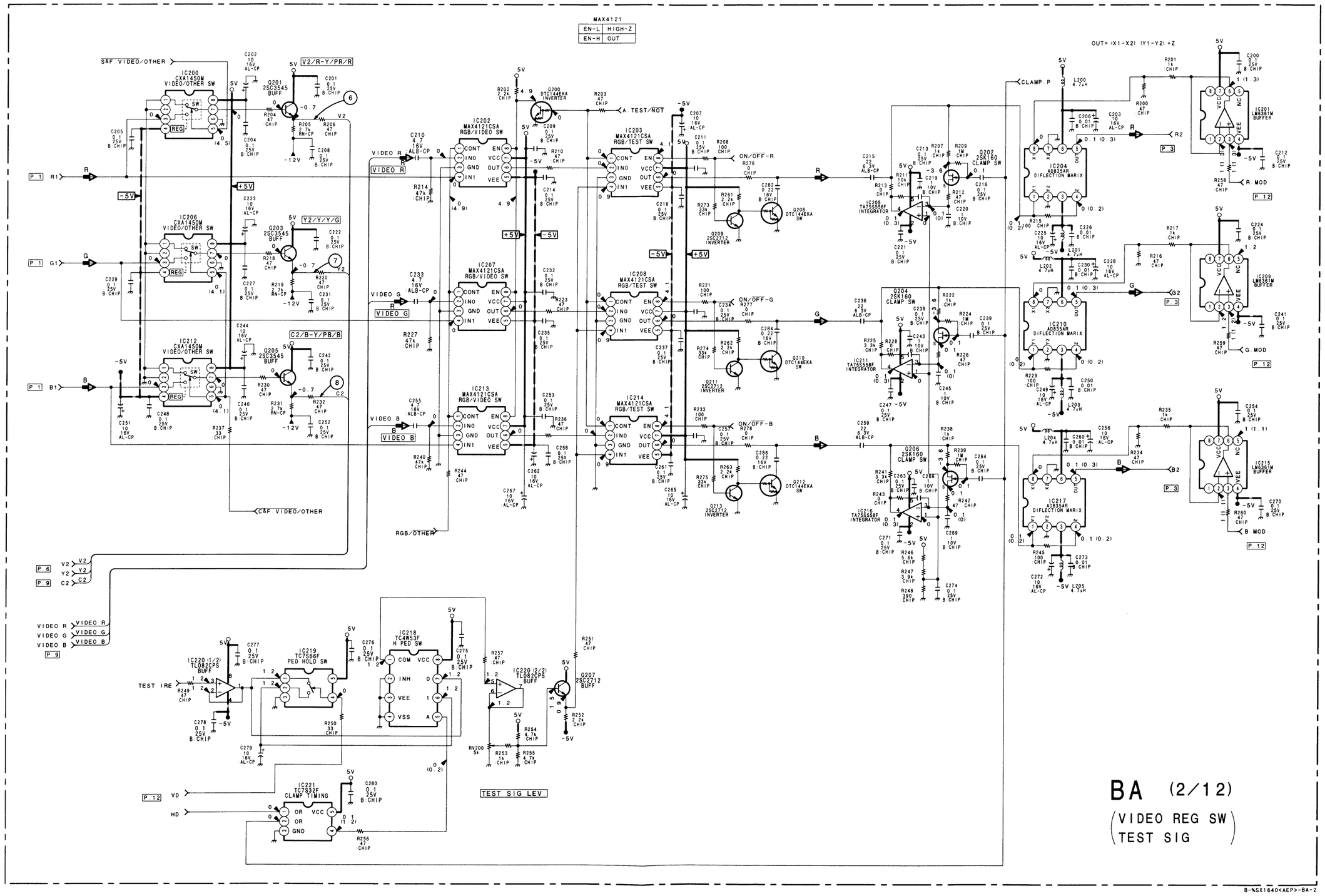
MAX4121
EN-L HIGH-Z
EN-H OUT
IC200 CXA1450M VIDEO/OTHER SW
IC206 CXA1450M VIDEO/OTHER SW
IC212 CXA1450M VIDEO/OTHER SW
IC202 MAX4121CSA RGB/VIDEO SW
IC207 MAX4121CSA RGB/VIDEO SW
IC213 MAX4121CSA RGB/VIDEO SW
IC203 MAX4121CSA RGB/TEST SW
IC208 MAX4121CSA RGB/TEST SW
IC214 MAX4121CSA RGB/TEST SW
IC204 AD8356R DIFLECTION MARIX
IC210 AD8356R DIFLECTION MARIX
IC217 AD8356R DIFLECTION MARIX
IC201 LM6361M BUFFER
IC209 LM6361M BUFFER
IC215 LM6361M BUFFER
IC205 TA75558F INTEGRATOR
IC211 TA75558F INTEGRATOR
IC216 TA75558F INTEGRATOR
IC218 TC4053F H PED SW
IC219 TC7556F PED HOLD SW
IC220 (1/2) TL082CPS BUFF
IC220 (2/2) TL082CPS BUFF
IC221 TC7532F CLAMP TIMING
Q207 2SC2712 BUFF
Q208 DTC144EKA SW
Q209 2SC2712 INVERTER
Q210 DTC144EKA SW
Q211 2SC2712 INVERTER
Q212 DTC144EKA SW
Q213 2SC2712 INVERTER
Q200 DTC144EKA INVERTER
Q201 2SC3545 BUFF
Q203 2SC3545 BUFF
Q205 2SC3545 BUFF
Q202 2SK160 CLAMP SW
Q204 2SK160 CLAMP SW
Q206 2SK160 CLAMP SW
S&F VIDEO/OTHER
C&F VIDEO/OTHER
RGB/OTHER
A TEST/NOT
ON/OFF-R
ON/OFF-G
ON/OFF-B
CLAMP P
TEST IRE
TEST SIG LEV.
OUT= (X1-X2) (Y1-Y2) +Z
BA (2/12)
(VIDEO REG SW
TEST SIG)

BA (3/12) BOARD

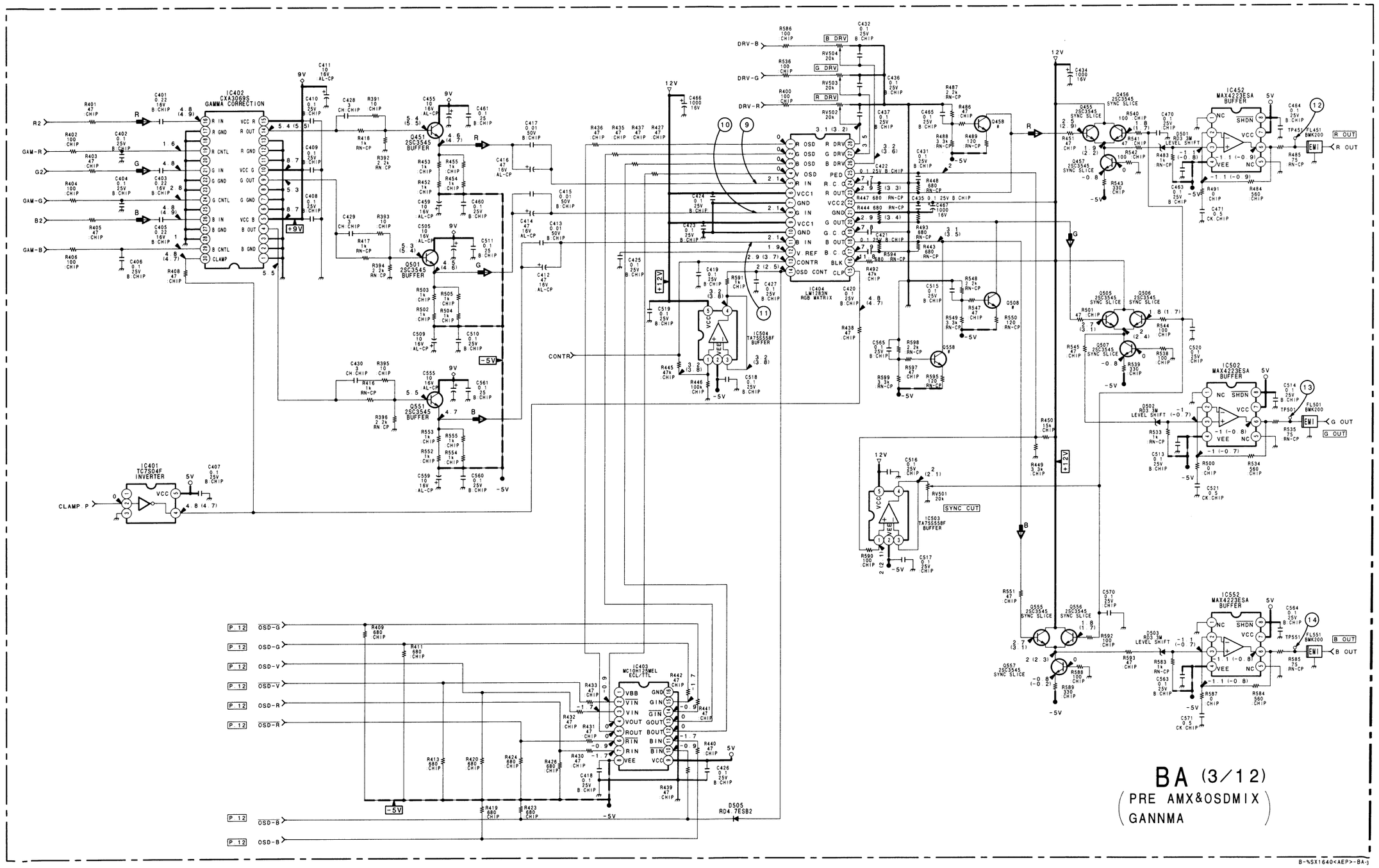
IC402
CXA3069S
GAMMA CORRECTION
IC401
TC7S04F
INVERTER
IC404
LM1283N
RGB MATRIX
IC403
MC10H125MEL
ECL/TTL
IC452
MAX4223ESA
BUFFER
IC502
MAX4223ESA
BUFFER
IC552
MAX4223ESA
BUFFER
IC503
TA75S558F
BUFFER
IC504
TA75S558F
BUFFER
Q451
2SC3545
BUFFER
Q501
2SC3545
BUFFER
Q551
2SC3545
BUFFER
Q455
2SC3545
SYNC SLICE
Q456
2SC3545
SYNC SLICE
Q457
2SC3545
SYNC SLICE
Q505
2SC3545
SYNC SLICE
Q506
2SC3545
SYNC SLICE
Q507
2SC3545
SYNC SLICE
Q555
2SC3545
SYNC SLICE
Q556
2SC3545
SYNC SLICE
Q557
2SC3545
SYNC SLICE
D501
RD3.3M
LEVEL SHIFT
D502
RD3.3M
LEVEL SHIFT
D503
RD3.3M
LEVEL SHIFT
D505
RD4.7ESB2
R OUT
G OUT
B OUT
SYNC CUT
CONTR
CLAMP.P
OSD-G
OSD-V
OSD-R
OSD-B
BA (3/12)
PRE AMX&OSDMIX
GANNMA

BA (4/12) BOARD

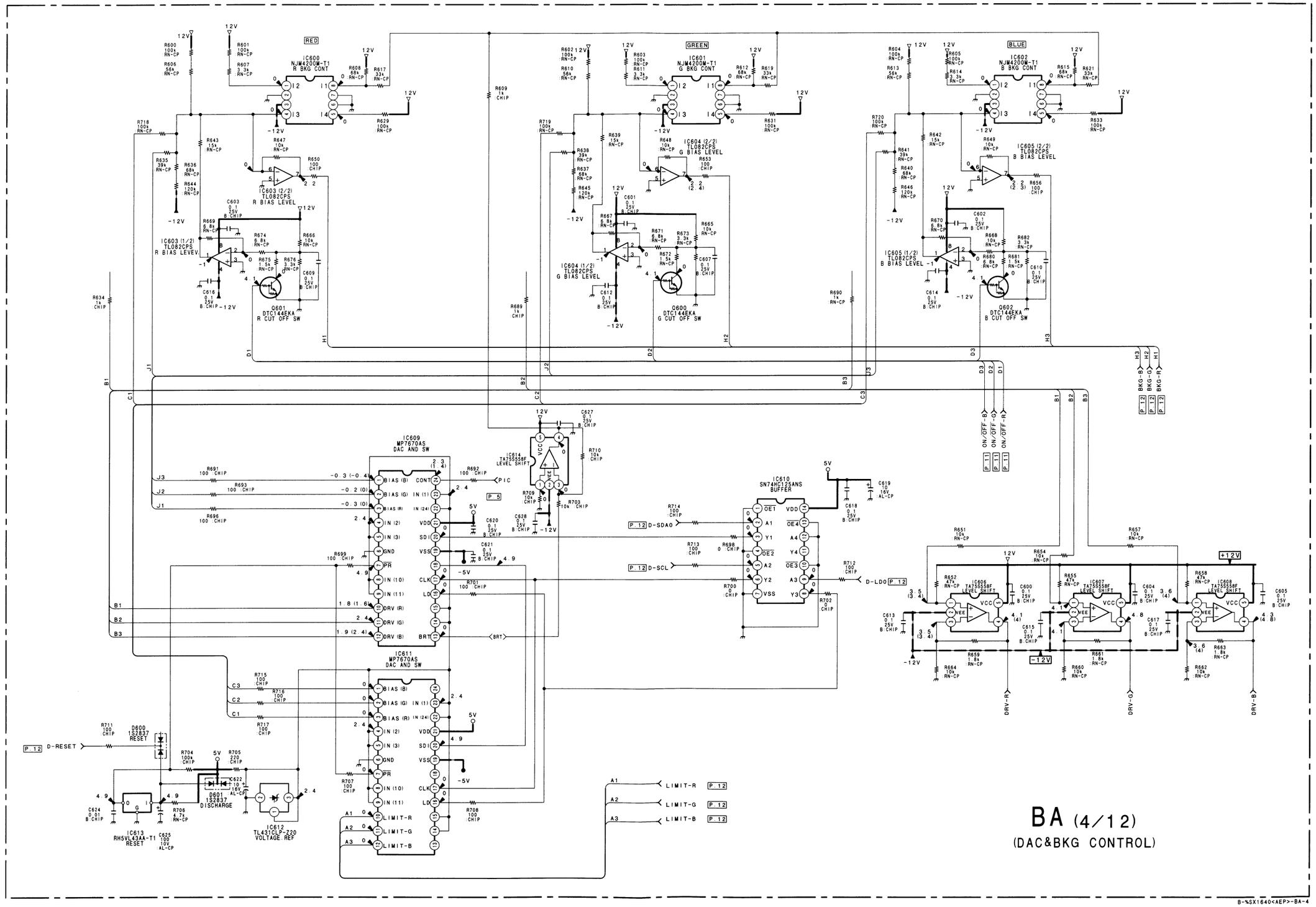

B-%SX1640<AEP>-BA-4

BA (5/12) BOARD

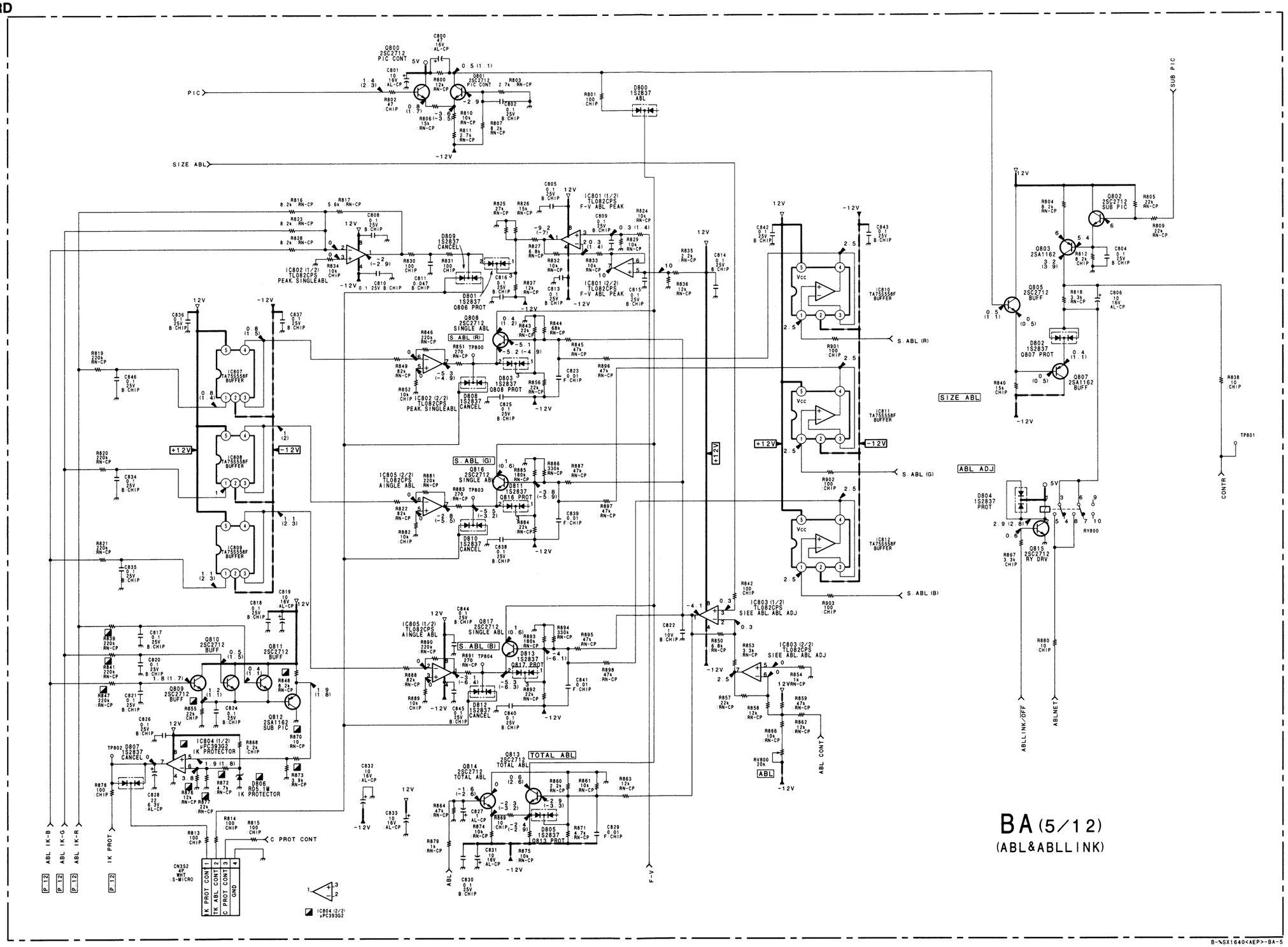
BA (5/12)
(ABL&ABLLINK)
PIC
SIZE ABL
SUB PIC
S. ABL (R)
S. ABL (G)
S. ABL (B)
ABL ADJ
ABL
ABL CONT
CONTR
ABLLINK/OFF
ABLNET
ABL IK-B
ABL IK-G
ABL IK-R
IK PROT
C PROT CONT
IK PROT CONT
TK ABL CONT
C PROT CONT
GND
CN352 4P WHT S-MICRO
Q800 2SC2712 PIC CONT
Q801 2SC2712 PIC CONT
D800 1S2837 ABL
IC801 (1/2) TL082CPS F-V ABL PEAK
IC801 (2/2) TL082CPS F-V ABL PEAK
IC802 (1/2) TL082CPS PEAK SINGLEABL
IC802 (2/2) TL082CPS PEAK SINGLEABL
IC805 (1/2) TL082CPS AINGLE ABL
IC805 (2/2) TL082CPS AINGLE ABL
IC803 (1/2) TL082CPS SIEE ABL ABL ADJ
IC803 (2/2) TL082CPS SIEE ABL ABL ADJ
IC804 (1/2) μPC393G2 IK PROTECTOR
IC804 (2/2) μPC393G2
IC807 TA75S558F BUFFER
IC808 TA75S558F BUFFER
IC809 TA75S558F BUFFER
IC810 TA75S558F BUFFER
IC811 TA75S558F BUFFER
IC812 TA75S558F BUFFER
Q808 2SC2712 SINGLE ABL
Q816 2SC2712 SINGLE ABL
Q817 2SC2712 SINGLE ABL
Q813 2SC2712 TOTAL ABL
Q814 2SC2712 TOTAL ABL
Q809 2SC2712 BUFF
Q810 2SC2712 BUFF
Q811 2SC2712 BUFF
Q812 2SA1162 SUB PIC
Q802 2SC2712 SUB PIC
Q803 2SA1162
Q805 2SC2712 BUFF
Q807 2SA1162 BUFF
Q815 2SC2712 RV DRV
D801 1S2837 0806 PROT
D802 1S2837 0807 PROT
D803 1S2837 0808 PROT
D804 1S2837 PROT
D805 1S2837 0813 PROT
D806 RD5.1M IK PROTECTOR
D807 1S2837 CANCEL
D808 1S2837 CANCEL
D809 1S2837 CANCEL
D810 1S2837 CANCEL
D811 1S2837 Q816 PROT
D812 1S2837 CANCEL
D813 1S2837 Q817 PROT
RV800 20k
ABL
TP801
TP802
TP803
TP804
TP800
+12V
-12V
12V
5V

BA MOUNT (6/12) VOLTAGES

Pin No.	IC1003	IC1002	IC1001	IC1005	IC1006
1	GND	4.4	4.2 (4.3)	4.4	4.4 (4.5)
2	GND	N.C	4.1 (0)	0 (3.6)	0 (3.6)
3	GND	4.4	4.2 (4.9)	4.5 (4.3)	4.5 (4.4)
4	GND	N.C	0	N.C	0
5	GND	4.4	4.5 (5.3)	N.C	N.C
6	GND	8 (7.9)	9	9	9
7	GND	4.4	3.5 (2.7)	3.7	3.8 (3.7)
8	GND	4.4	GND	GND	GND
9	GND	4.4			
10	GND	4.4			
11	2.3	4.4			
12	GND	0 (7.9)			
13	5	4.6			
14	2.4 (2.1)	4.6			
15	2.4 (2.1)	0			
16	2.4 (2.1)	N.C			
17	5	N.C			
18	5	N.C			
19	GND	N.C			
20	GND	N.C			
21	GND	N.C			
22	0.5	N.C			
23	GND	4.3 (0)			
24	GND	N.C			
25	1.2 (0.6)	N.C			
26	5	N.C			
27	2.5	N.C			
28	5	N.C			
29	5	3.8 (3.7)			
30	GND	GND			
31	0.5 (0)	3.7			
32	3.3	N.C			
33	1.9	N.C			
34	2	4.3 (4.4)			
35	GND	N.C			
36	1	4.4			
37	5	3.6			
38	GND	9			
39	0.7	3.7			
40	3.3	4.4			

Note: No Mark is VIDEO signal and common. ( ) Mark is Component signal.

Pin No.	IC1003	IC1002
41	1.9	4.4
42	2	4.4
43	GND	4.4
44	N.C	N.C
45	N.C	4.4
46	N.C	N.C
47	N.C	4.4
48	N.C	7.9
49	N.C	
50	N.C	
51	N.C	
52	GND	
53	5	
54	N.C	
55	N.C	
56	5	
57	N.C	
58	N.C	
59	N.C	
60	N.C	
61	N.C	
62	N.C	
63	N.C	
64	N.C	
65	N.C	
66	N.C	
67	5	
68	4.9	
69	0 (4.9)	
70	0 (4.9)	
71	GND	
72	GND	
73	5	
74	GND	
75	GND	
76	GND	
77	GND	
78	0	
79	0	
80	0	

BA (6/12) BOARD

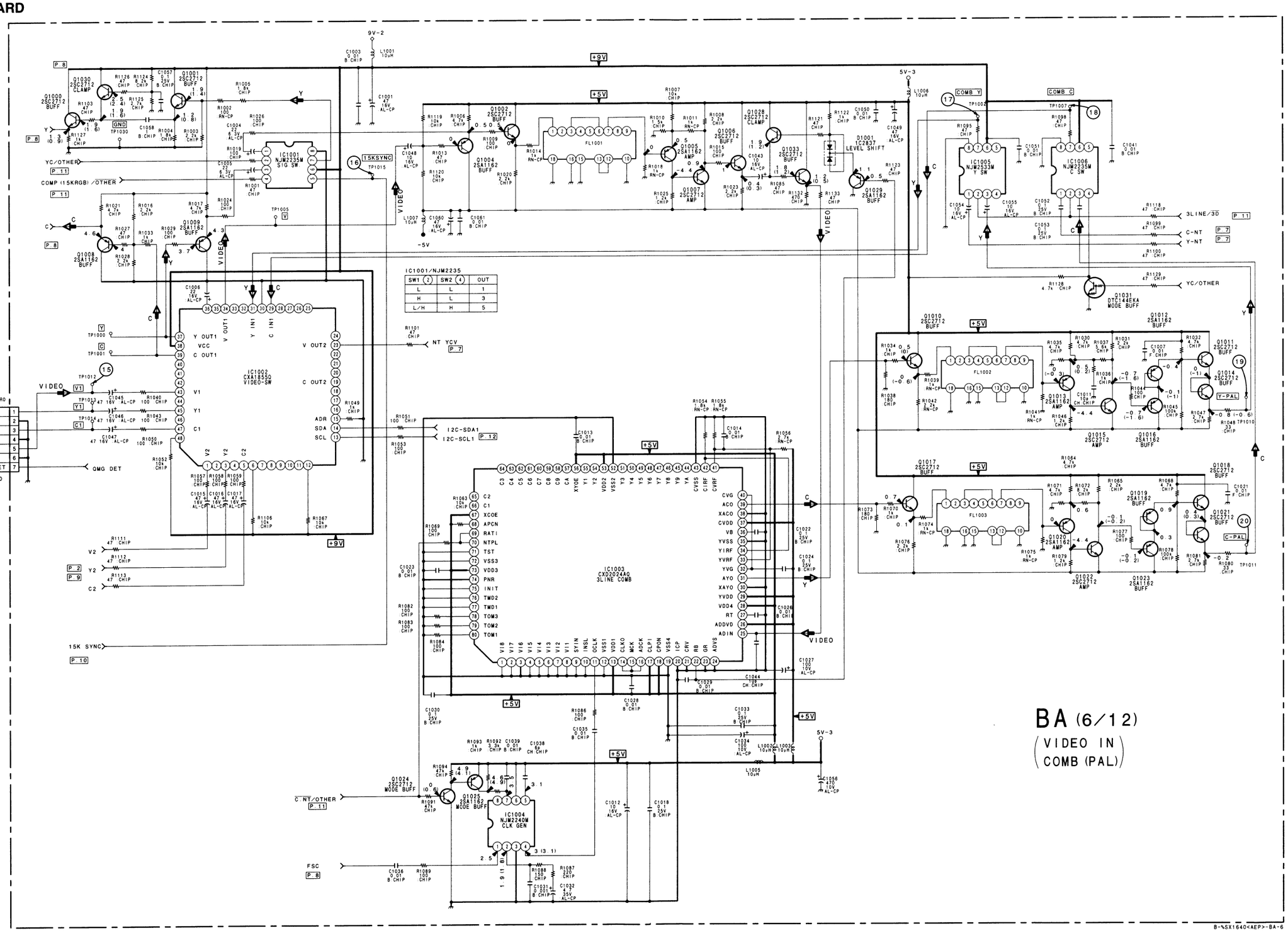
IC1001/NJM2235
SW1 (2) SW2 (4) OUT
L L 1
H L 3
L/H H 5
IC1001 NJM2235M S/O SW
IC1002 CXA1550 VIDEO-SW
IC1003 CXD2024AQ 3LINE COMB
IC1004 NJM2240M CLK GEN
IC1005 NJM2533M Y SW
IC1006 NJM2235M C SW
D1001 IC2837 LEVEL SHIFT
FL1001
FL1002
FL1003
CN351 FPC 5-MICRO
TO BD BOARD CN400
BA (6/12)
(VIDEO IN COMB (PAL))
B-%SX1640<AEP>-BA-6

BA MOUNT (7/12) VOLTAGES

Pin No.	IC1203	IC1202	IC205	IC206
1	GND	5	1.6	3.2
2	1.4	2 (0)	1.6	0
3	1.4	2.3 (0)	0	5
4	1.4	1.3 (2.7)	3.2	2.6 (2.5)
5	1.4	2.3 (2.7)	3.2	GND
6	1.5 (1.4)	5	0	0
7	1.5 (1.4)	2.1 (2.7)	GND	2.5
8	1.4	2.2 (2.7)	N.C	0
9	1.3	0.8 (0)	3.3	2.2
10	0.9 (1)	1 (0)	N.C	5
11	2.8 (3)	N.C	3.3	GND
12	2.2	N.C	N.C	0
13	1.3 (0)	2.8 (2.9)	3.3	1.3 (1.5)
14	1.3 (0)	0.4	3.3	1.8 (0.5)
15	2.4 (3.8)	N.C		1.2 (2.7)
16	2.4 (3.8)	1.3		2.4 (4.4)
17	3.1 (3.8)	0 (1.4)		1.6 (4.4)
18	1.6 (1.9)	1.5 (1.4)		5
19	2.5 (2.6)	1.4 (1.3)		GND
20	2.1 (2.3)	5		1.6 (4.4)
21	1 (0)	GND		1.2 (0)
22	0.9 (0)	1.5		1.1 (0)
23	2.3 (0)	1.4		N.C
24	2.1 (0)	1.5 (1.4)		1.6
25	2.3 (0)	1.4		
26	1.4 (2.7)	0 (1.4)		
27	2.3 (0)	0 (2.2)		
28	1.8 (0)	0.8 (0.9)		
29	GND	0.8 (0.9)		
30	1.4	N.C		
31	1.5	1.4 (0)		
32	3.3	1.4 (0)		
33	N.C	2.5 (3.8)		
34	N.C	0 (3.8)		
35	N.C	GND		
36	N.C	3.1 (3.8)		
37	N.C	1.8 (2.2)		
38	N.C	2.5 (2.3)		
39	N.C	2.2 (1.7)		
40	GND	GND		
41	0			
42	0			
43	0			
44	0			
45	3.3			
46	3.2			
47	1.5			
48	GND			
49	GND			
50	1.5			

Pin No.	IC1203
51	0 (0.8)
52	0 (0.8)
53	3.3
54	GND
55	GND
56	N.C
57	3.2
58	GND
59	4.6 (4.6)
60	4.6
61	0
62	N.C
63	N.C
64	3.3
65	0
66	0
67	1.4 (0.8)
68	1.8 (0.8)
69	1.4 (2.4)
70	2.5 (4.4)
71	1.7 (4.4)
72	1.7 (4.4)
73	1.4 (0)
74	1.1 (0)
75	1.6
76	4.2 (4.9)
77	GND
78	GND
79	GND
80	GND
81	3.3
82	9.9
83	1.5
84	1.4 (1.2)
85	0.9
86	GND
87	GND
88	0
89	0
90	0
91	0
92	3.3
93	3.3
94	0
95	
96	N.C
97	GND
98	0.4
99	1.5
100	3.3

Note: No Mark is VIDEO signal and common. ( ) Mark is Component signal.

BA (7/12) BOARD

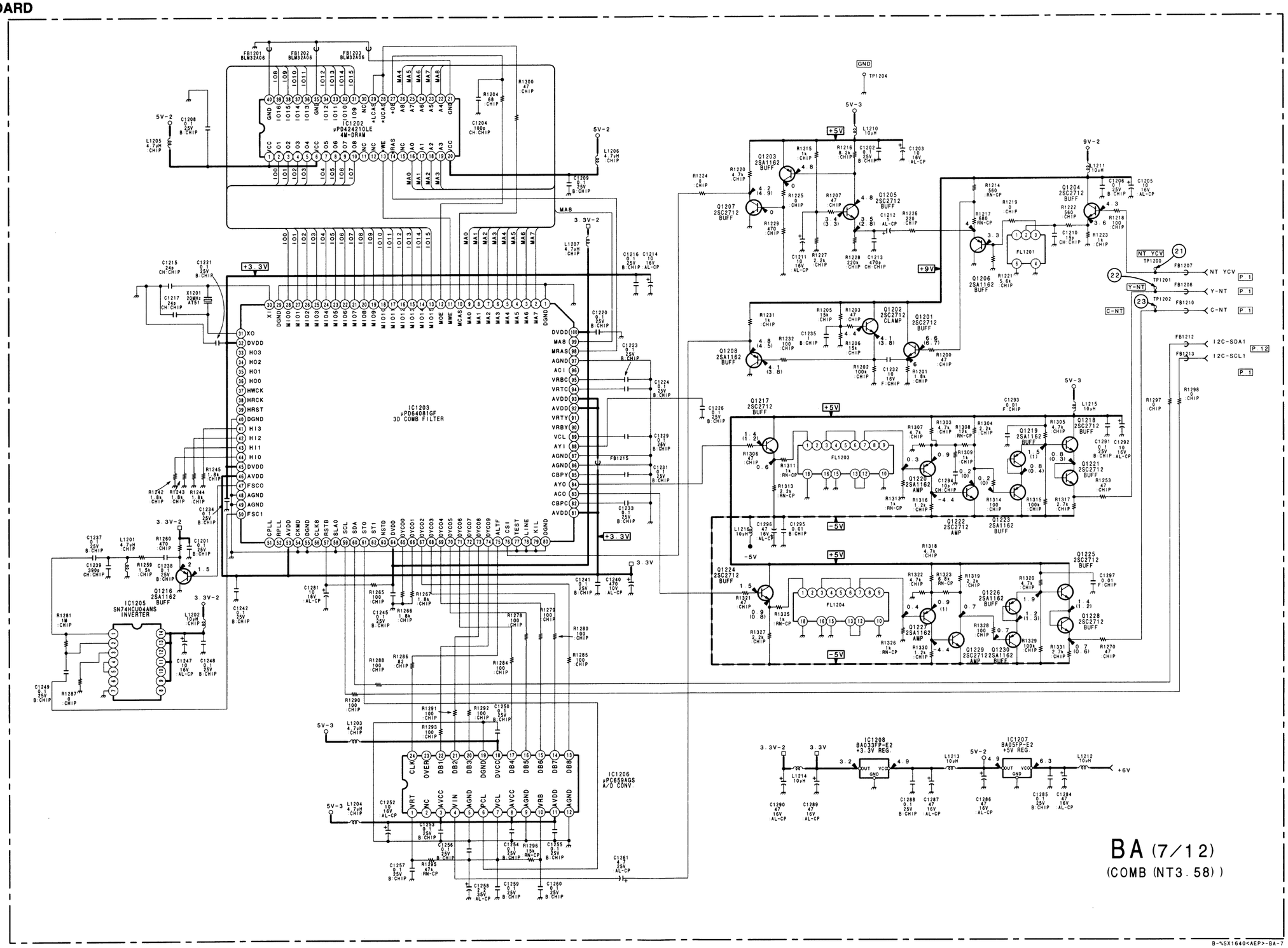
IC1202
μPD424210LE
4M-DRAM
IC1203
μPD64081GF
3D COMB FILTER
IC1205
SN74HCU04ANS
INVERTER
IC1206
μPC659AGS
A/D CONV.
IC1208
BA033FP-E2
+3.3V REG.
IC1207
BA05FP-E2
+5V REG.
FL1203
FL1204
FL1201
NT YCV
Y-NT
C-NT
I2C-SDA1
I2C-SCL1
+6V
BA (7/12)
(COMB (NT3.58))

 BA (8/12)

BA MOUNT (8/12) VOLTAGES

PIN NO.	IC1402	IC1403	IC1404	IC1407	IC1408	IC1409
1	2.1	5	3.5	3.6 (3.5)	GND	N.C
2	2	N.C	0	0	4.6 (4.8)	0 (1.5)
3	2.4 (0)	GND	3.6 (3.5)	3.6 (3.5)	5	4.8 (0)
4	2.5 (0)	GND	N.C	N.C	4.8 (0)	GND
5	4.5	0.6	N.C	N.C	5	N.C
6	4.6 (4.5)	N.C	9	9	0.1 (0)	1.2
7	4.9	N.C	3.8	3.8	N.C	4.3 (4.9)
8	8	GND	GND	GND	GND	5
9	GND	5			N.C	
10	0.5 (0.6)	N.C			2.9 (0)	
11	0	2.9			0.3 (0)	
12	2.9 (0)	2.9			2.9 (0)	
13	2.5 (2.4)	N.C			5	
14	2.4 (2.5)	1.5			4.9 (2.8)	
15	0	N.C			GND	
16	N.C	1.8			5	
17	0.2 (0)					
18	N.C					
19	N.C					
20	N.C					
21	N.C					
22	7.3					
23	4.1 (0)					
24	3.9 (3.5)					
25	0					
26	3.6 (3.2)					
27	GND					
28	3.4					
29	4.5 (4.2)					
30	1.4 (1.9)					
31	2.2 (1.7)					
32	3.9 (3.7)					

Note: No Mark is VIDEO signal and common. ( ) Mark is Component signal.

 10-28

BA (8/12) BOARD

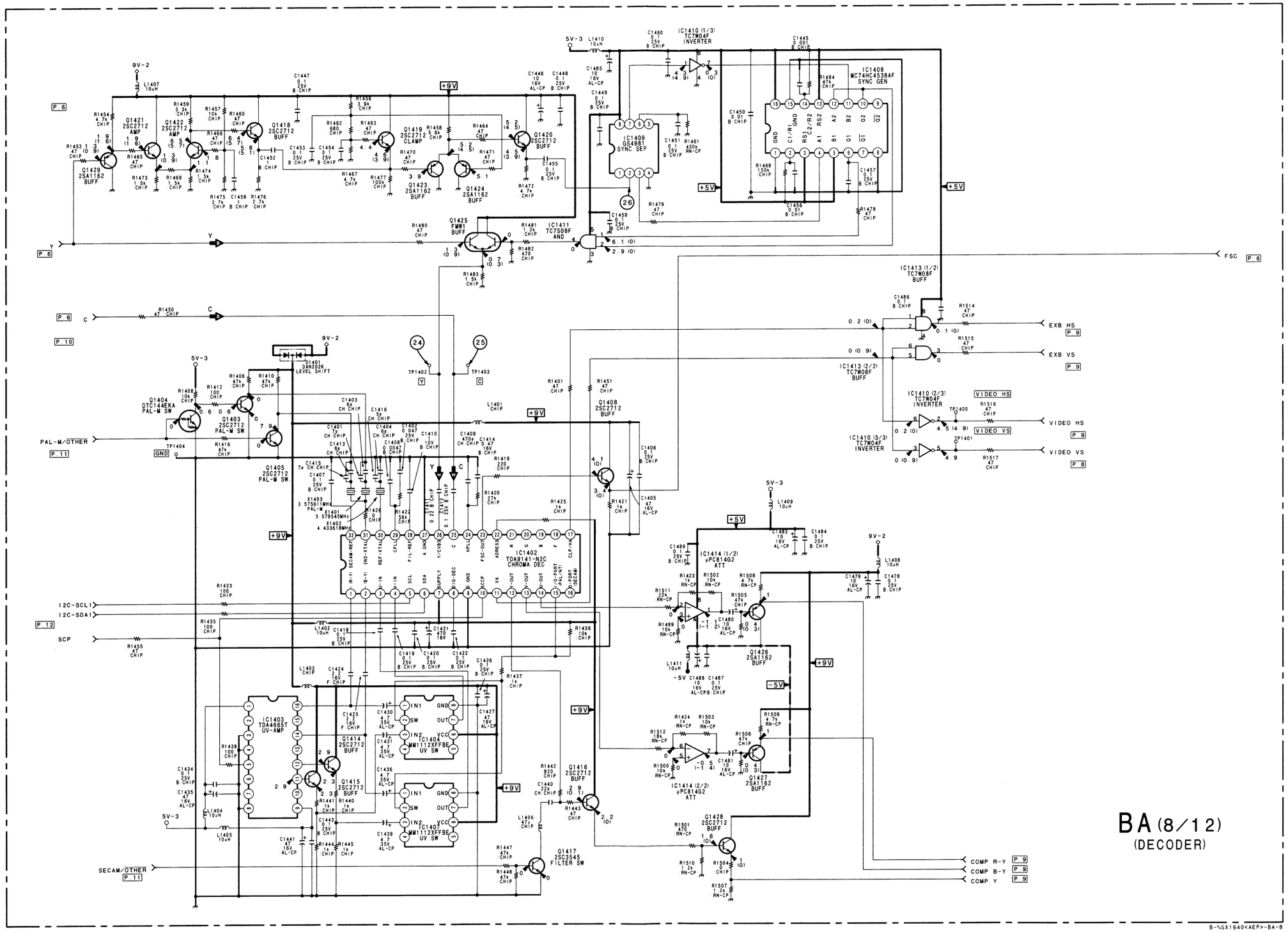
IC1402 TDA9141-N2C CHROMA DEC
IC1403 TDA4665T UV-AMP
IC1404 MM1112XFFBE UV SW
IC1407 MM1112XFFBE UV SW
IC1408 MC74HC4538AF SYNC GEN
IC1409 GS4981 SYNC SEP
IC1410 (1/3) TC7W04F INVERTER
IC1410 (2/3) TC7W04F INVERTER
IC1410 (3/3) TC7W04F INVERTER
IC1411 TC7S08F AND
IC1413 (1/2) TC7W08F BUFF
IC1413 (2/2) TC7W08F BUFF
IC1414 (1/2) μPC814G2 ATT
IC1414 (2/2) μPC814G2 ATT
Q1404 DTC144EKA PAL-M SW
Q1405 2SC2712 PAL-M SW
Q1417 2SC3545 FILTER SW
Q1425 FMW1 BUFF
D1401 DAN202K LEVEL SHIFT
X1403 3.575611MHz PAL-M
X1401 3.579545MHz
X1402 4.433618MHz
PAL-M/OTHER
SECAM/OTHER
I2C-SCL1
I2C-SDA1
SCP
FSC
EXB HS
EXB VS
VIDEO HS
VIDEO VS
COMP R-Y
COMP B-Y
COMP Y
BA (8/12)
(DECODER)
B-%SX1640<AEP>-BA-8

BA MOUNT (9/12) VOLTAGES

Pin No.	IC1600	IC1712
1	6.9 (2.4)	4 (3.9)
2	7.1 (2.4)	3.9
3	2.8 (2.9)	3.9
4	2.8 (2.9)	4.9
5	2.9	3.9 (4.1)
6	9	3.9 (4.1)
7	2.4 (7.3)	3.9 (0)
8	2.4 (7)	0.5 (0)
9	2.9	3.4 (0)
10	2.9	3.4
11	2.9	3.4
12	GND	3.5
13	2.4 (7.3)	3.5
14	2.4 (7)	3.5
15	2.8 (2.9)	N.C
16	2.8 (2.9)	4 (3.7)
17	2.8 (2.9)	3.7
18	3 (2.9)	3.6 (3.7)
19	2.4	GND
20	2.4 (2.5)	0
21	2.8	GND
22	2.9 (2.8)	4.3 (0)
23	2.9 (2.8)	0
24	3 (2.9)	2.1 (0)
25	5.1 (5)	GND
26	2.5 (2.9)	2.1
27	4.5	GND
28	0.4 (0.3)	2.1
29	0.6 (0.3)	
30	9	
31	0 (0.2)	
32	GND	
33	GND	
34	GND	
35	0 (2.1)	
36	2.8 (0)	
37	0 (2.1)	
38	0	
39	0.8 (2.1)	
40	0	

Pin No.	IC1600
41	GND
42	0
43	8.7 (0)
44	3.2
45	GND
46	4.8
47	4.8
48	4.8
49	GND
50	4.1
51	4,.1
52	4.1
53	GND
54	3.7 (4.1)
55	4.5 (4.6)
56	4.6
57	0 (0.2)
58	3.3 (3.6)
59	N.C
60	N.C
61	GND
62	4.7
63	4.7 (4.2)
64	4.7 (4.8)
65	0 (4.9)
66	4.5 (4.9)
67	4.8
68	4.8
69	4.9 (4.8)
70	GND
71	2.5
72	9
73	2.4 (2.3)
74	2.3
75	2.3
76	4.4
77	4.4
78	4.4
79	N.C

Note: No Mark is VIDEO signal and common. ( ) Mark is Component signal.

BA (9/12) BOARD

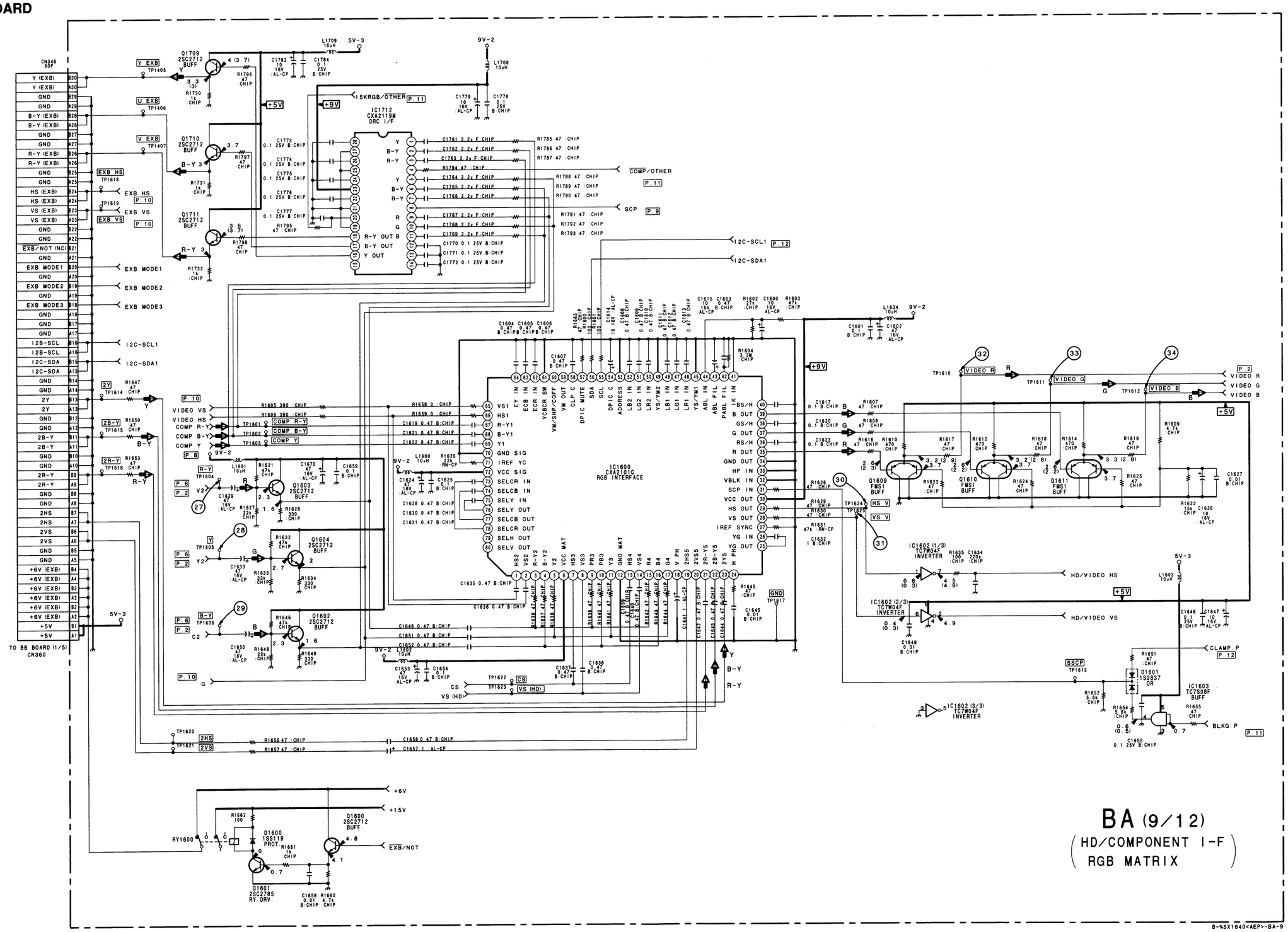
IC1712
CXA2119M
DRC I/F
IC1600
CXA2101Q
RGB INTERFACE
IC1602 (1/3)
TC7W04F
INVERTER
IC1602 (2/3)
TC7W04F
INVERTER
IC1602 (3/3)
TC7W04F
INVERTER
IC1603
TC7S08F
BUFF
TO BB BOARD (1/5)
CN360
BA (9/12)
(HD/COMPONENT I-F
RGB MATRIX)

BA MOUNT (10/12) VOLTAGES

Pin No.	IC1801	IC1802	IC1804	IC1811	IC181
1	2.7 (7)	0 (3.5)	0	0	0
2	2.9 (0)	0	GND	4.5 (4.9)	0
3	1.8 (3.5)	0 (3.5)	0 (4.5)	5	0
4	2.7	0 (4.5)	0	4.5 (4.9)	GND
5	2.8	0 (4.9)	GND	GND	0
6	0.1 (0)	0 (4.1)	0 (4.9)	GND	0
7	1.1 (1.5)	0 (4.9)	0	N.C	0
8	5	GND	GND	GND	5
9	1.2	0 (4.9)	0	4.9	
10	1.2	0	GND	0 (4.9)	
11	GND	GND	0 (0.4)	4.9	
12	3.1	0 (4.5)	0	4.5	
13	0.3	0 (3.5)	GND	0 (4.5)	
14	4.9	GND	0	4.5 (4.9)	
15	0.1 (0)	GND	0	0	
16	N.C	5	5	5	
17	N.C				
18	0.2				
19	1				
20	1				
21	0.3				
22	5				

Note: No Mark is VIDEO signal and common. ( ) Mark is Component signal.

BA (10/12) BOARD

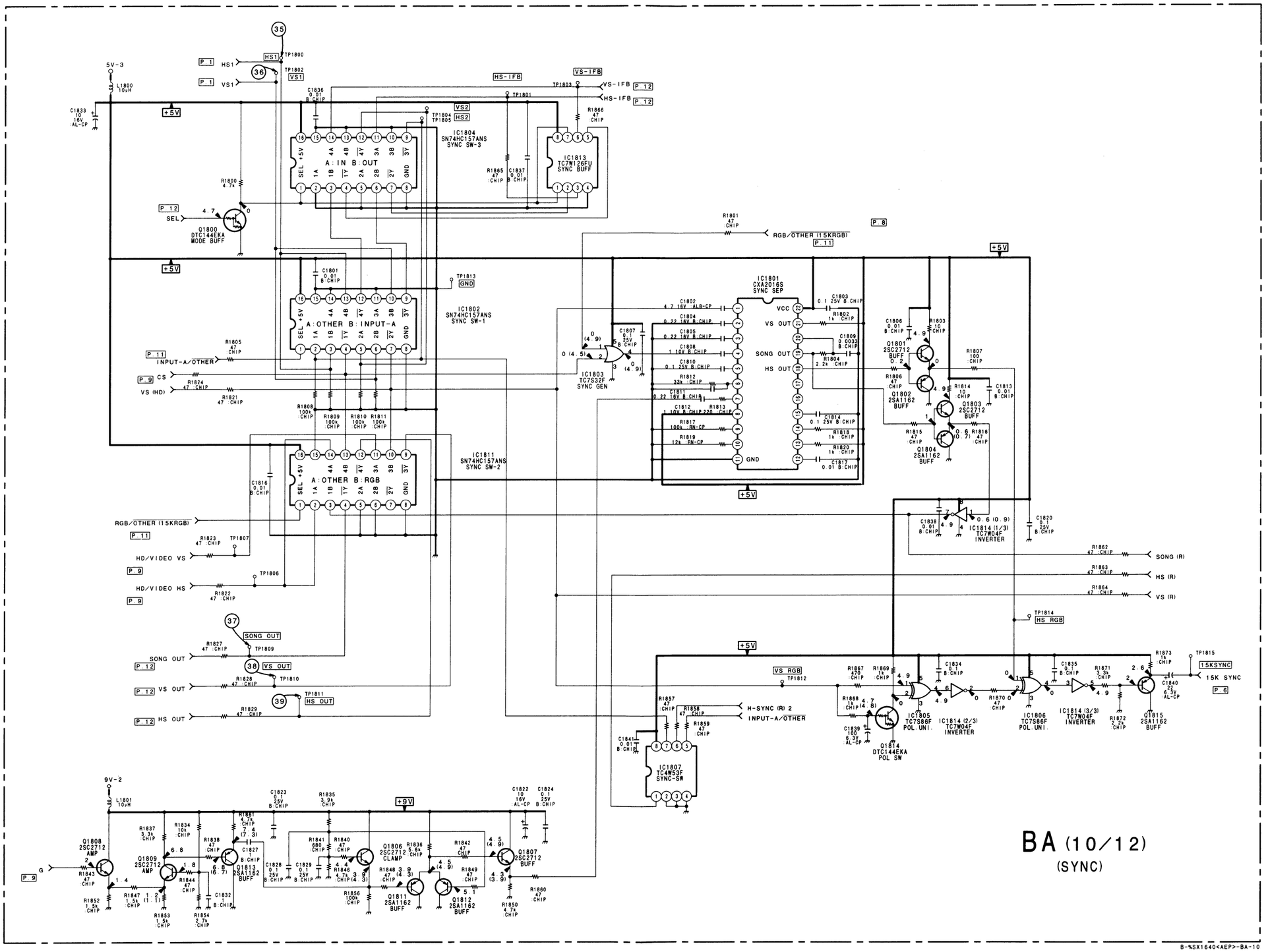

B-%SX1640<AEP>-BA-10

BA (11/12) BOARD

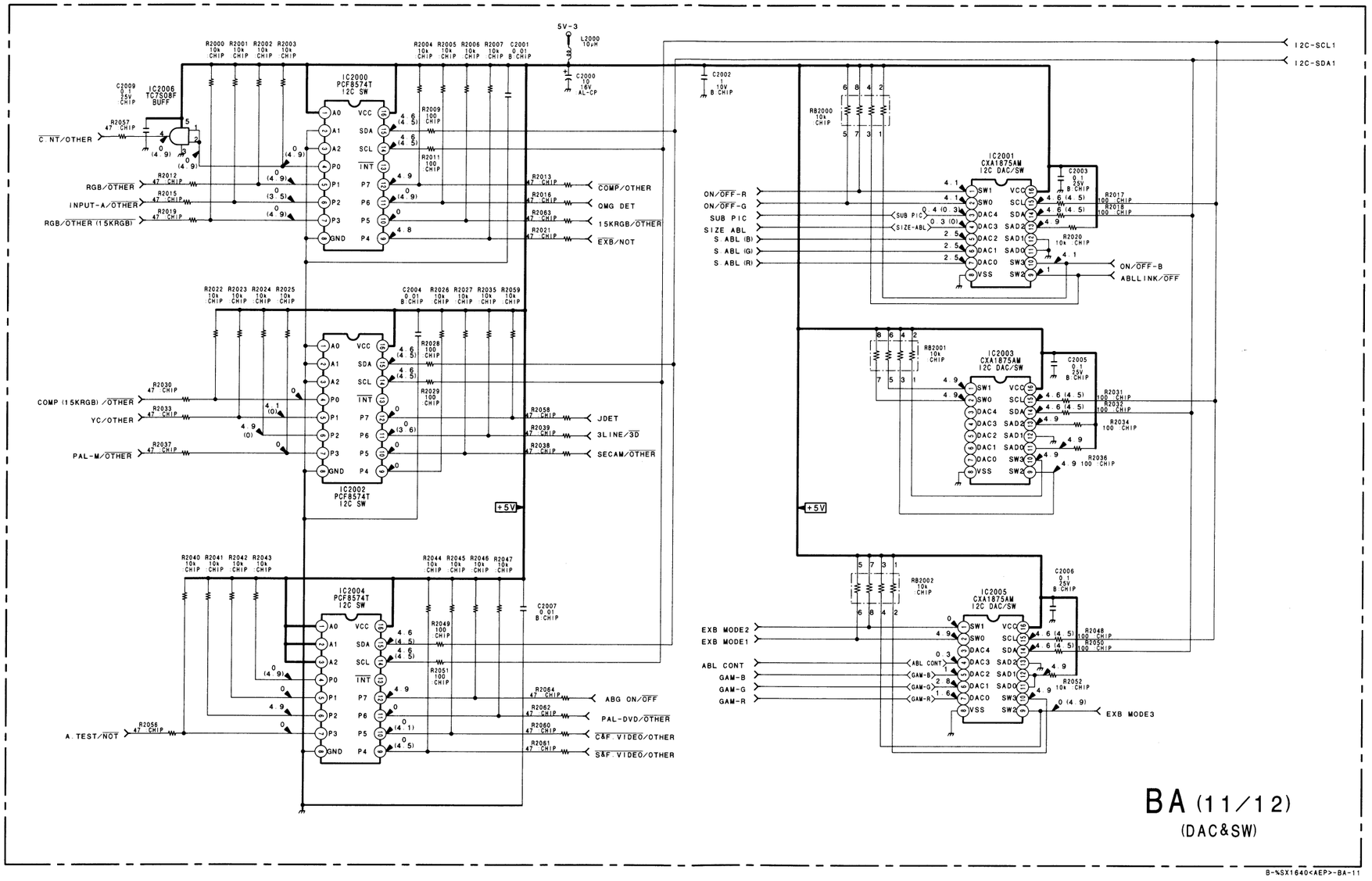

BA (12/12) BOARD

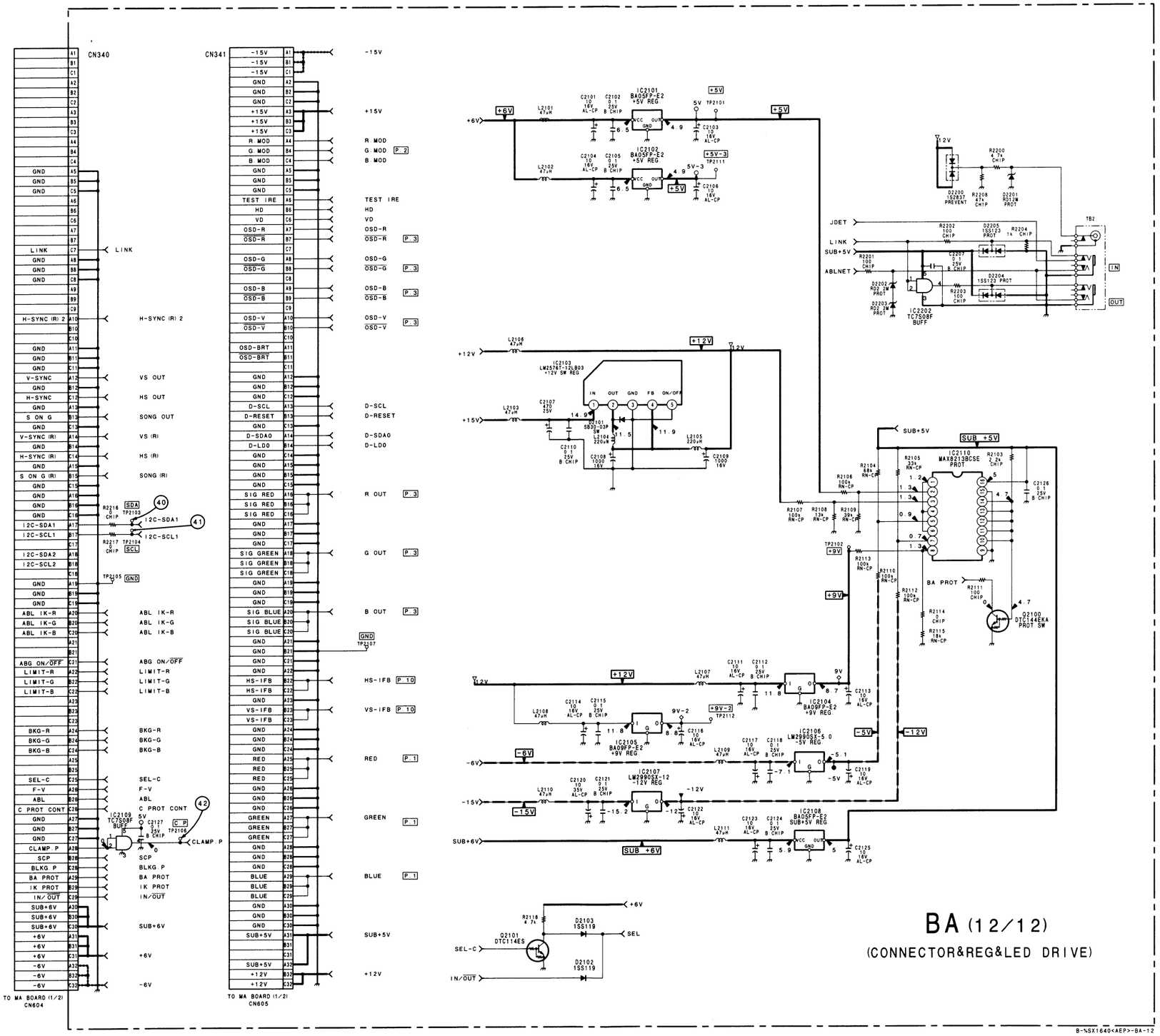

1

BA BOARD (1/12) IC1, 2, 3
MAX4121CSA

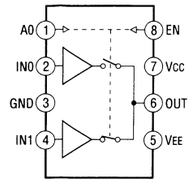

2

BA BOARD (2/12) IC202, 203, 207, 208, 213, 214
MAX4121CSA

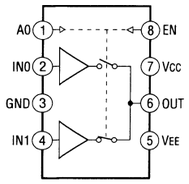

3

BA BOARD (2/12) IC204, 210, 217
AD835AF

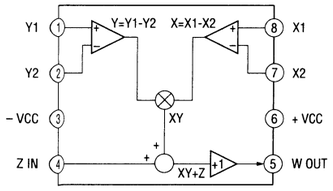

4

BA BOARD (2/12) IC218
TC4W53FU

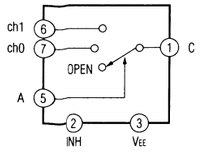

5

BA BOARD (3/12) IC403
MC10HC125MEL

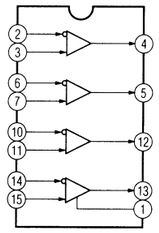

GND = PIN 16
VCC(+5.0 VDC) = PIN 9
VEE (-5.2 VDC) = PIN 8

BA BOARD (4/12) IC600, 601, 602
NJM4200M-T1

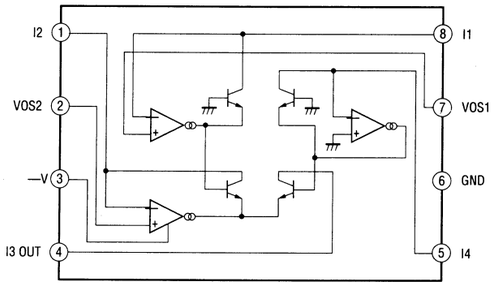

BA BOARD (6/12) IC1003
CXD2024AQ

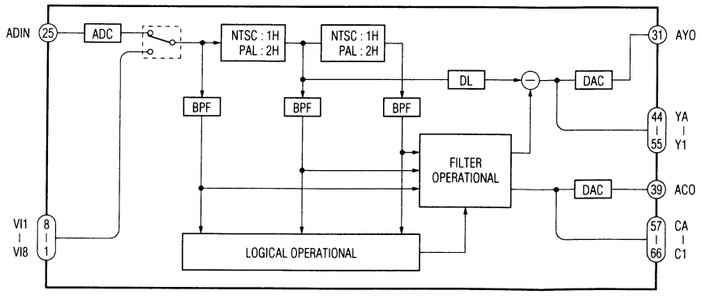

BA BOARD (3/12) IC404
LM1283N

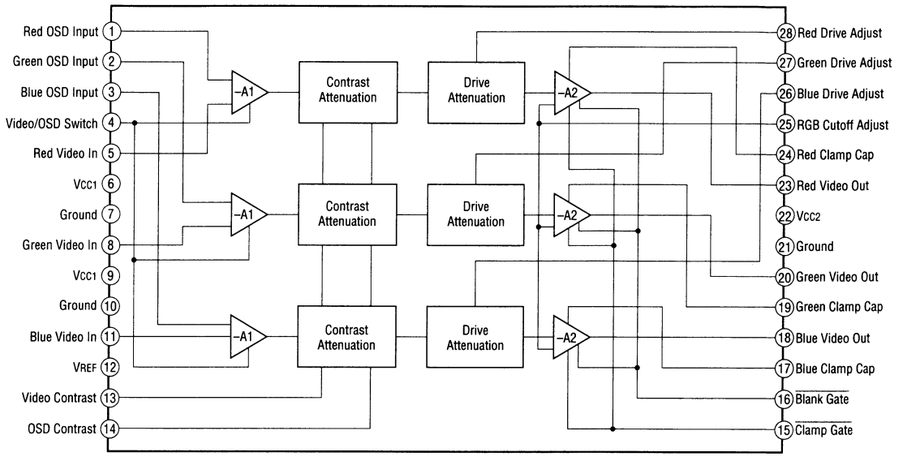

BA BOARD (3/12) IC402
CXA3069S

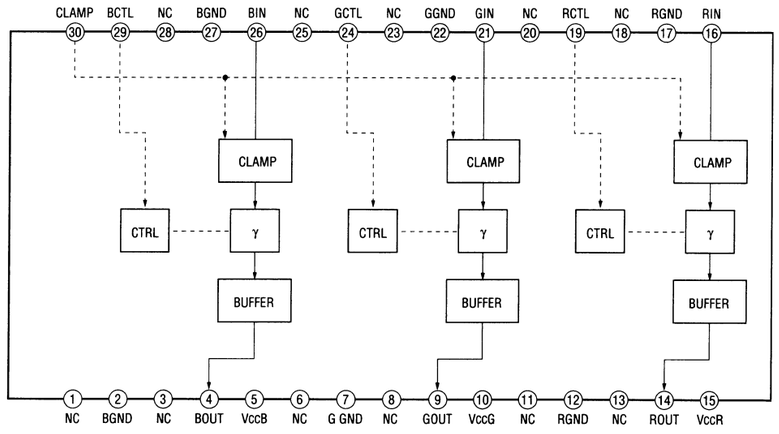

BA BOARD (4/12) IC609, 611
MP7670AS

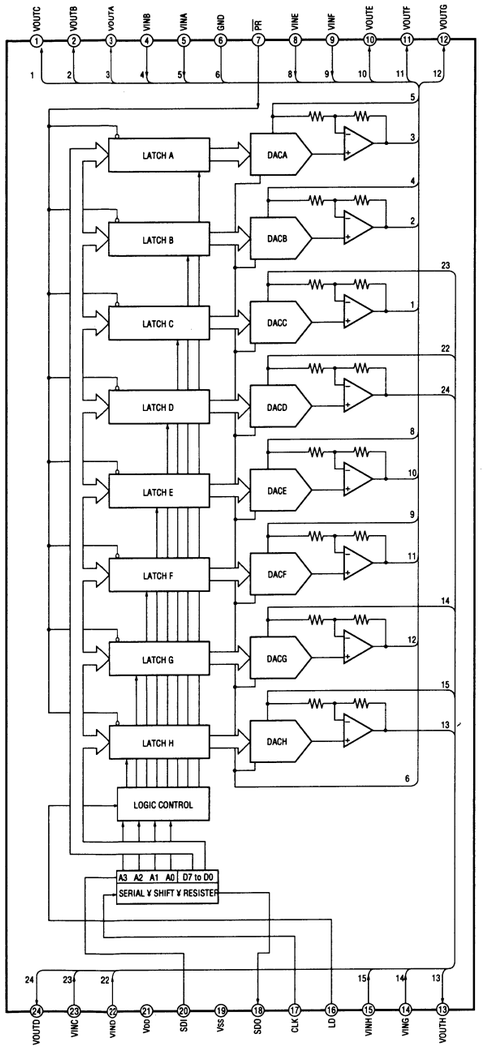

BA BOARD (6/12) IC1002
CXA1855Q

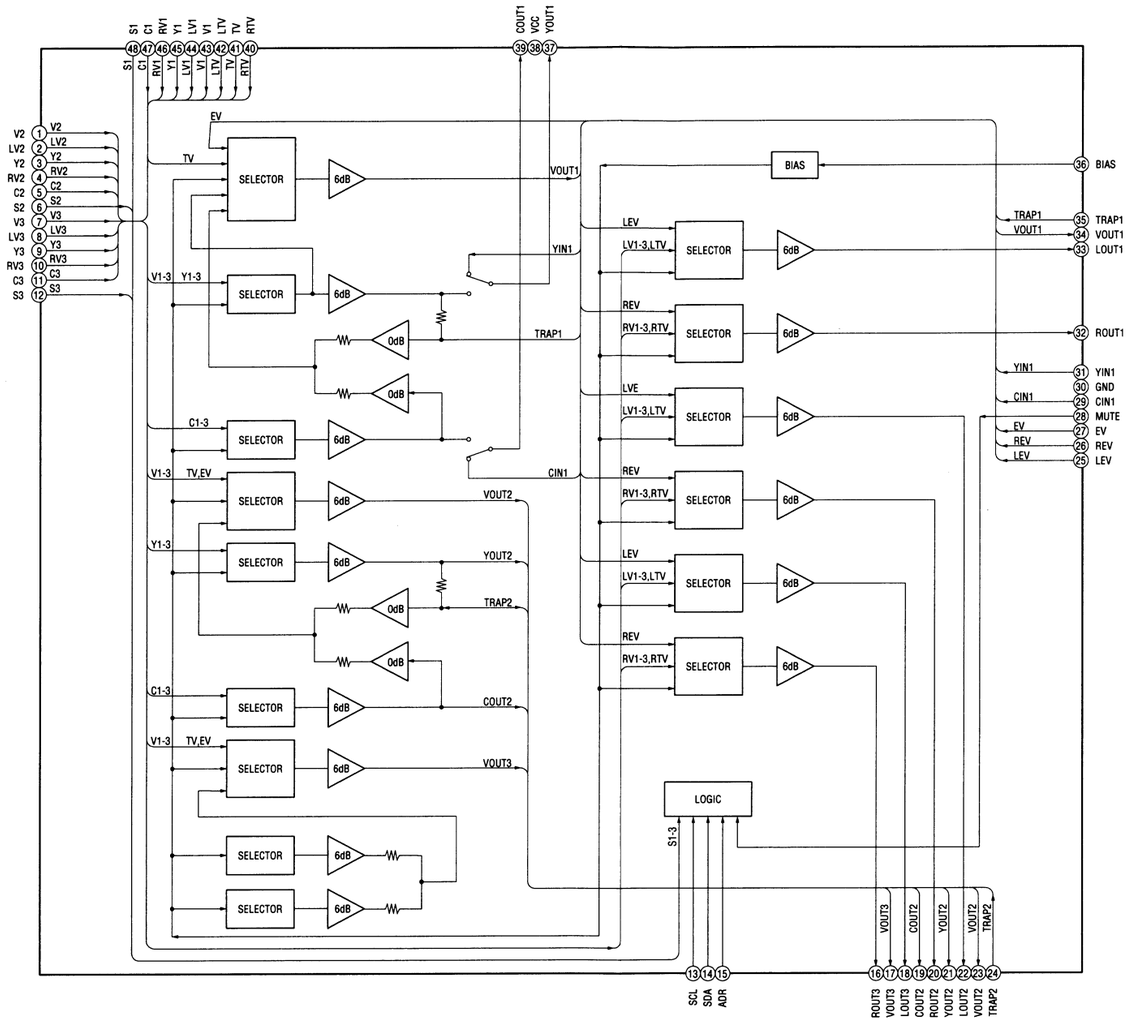

BA BOARD (6/12) IC1001, 1006
NJM2235M

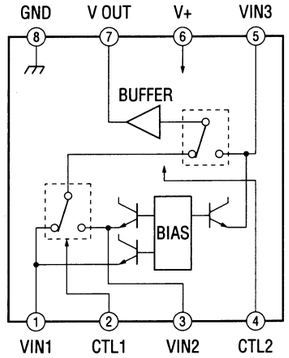

BA BOARD (6/12) IC1004
NJM2240M

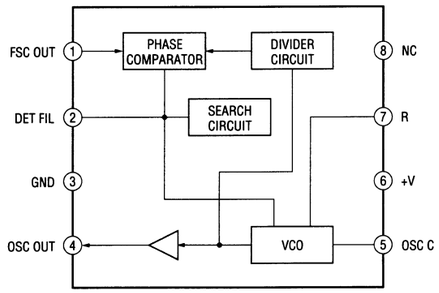

BA BOARD (8/12) IC1404, 1407
MM1112XFF

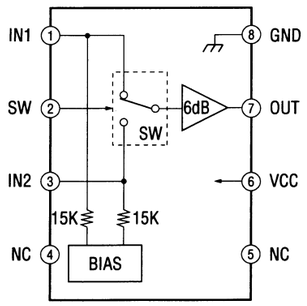

BA BOARD (6/10) IC1005
NJM2533M

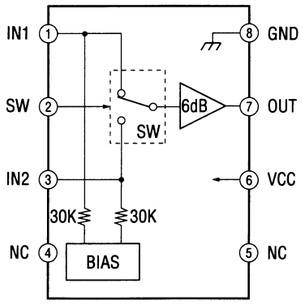

BA BOARD (8/12) IC1402
TDA9141-N2C

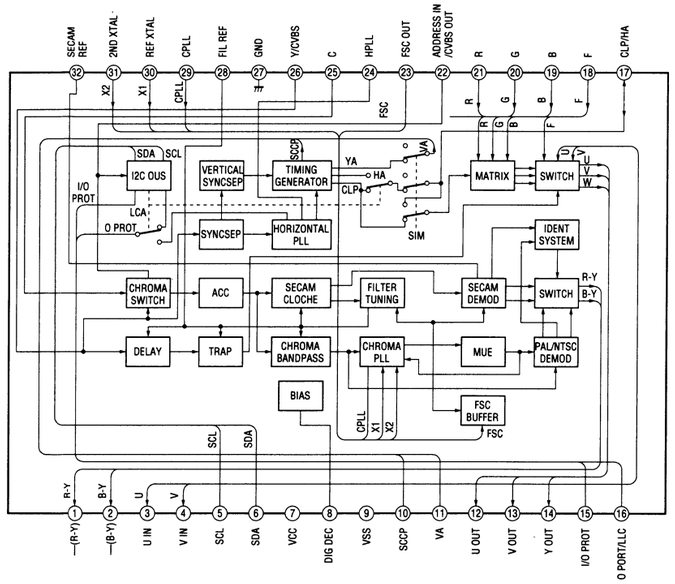

BA BOARD (9/12) IC1712
CXA2119M

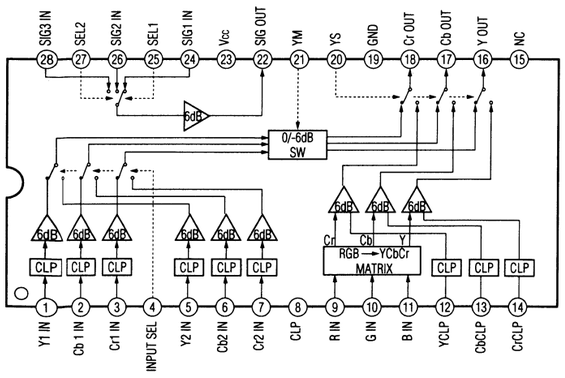

BA BOARD (10/12) IC1802, 1804, 1811
SN74HC157ANS

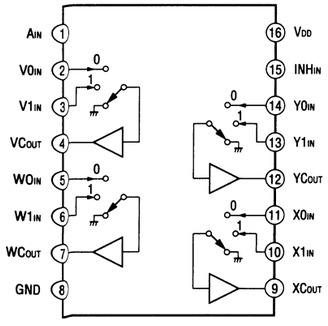

BA BOARD (10/12) IC1801
CXA2016S

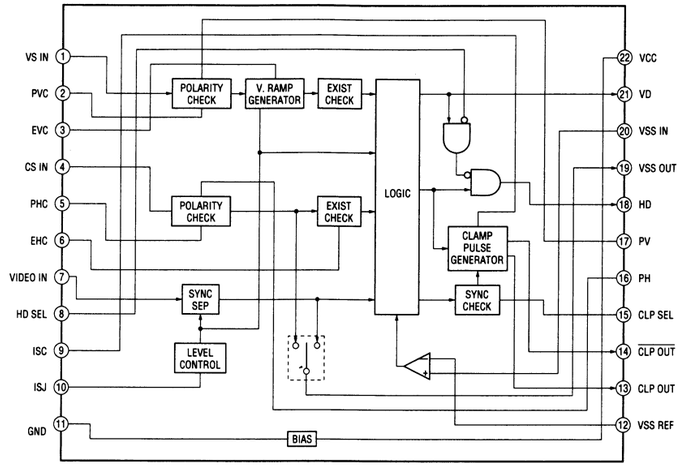

BA BOARD (11/12) IC2001, 2003, 2005
CXA1875AM

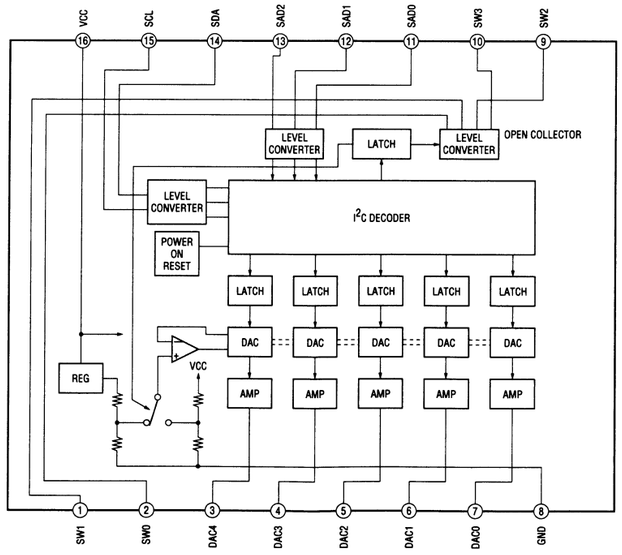

BA BOARD (11/12) IC2000, 2002, 2004
PCF8574T

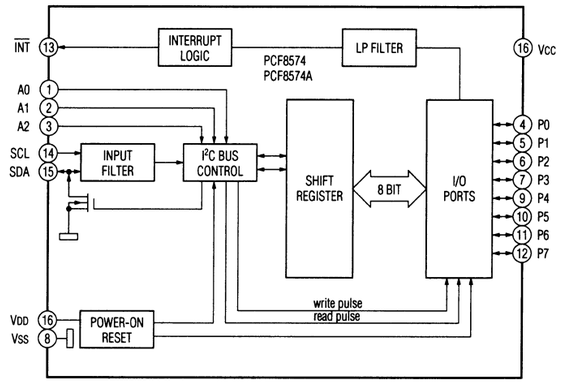

BA BOARD (12/12) IC2110
MAX8213BCSE

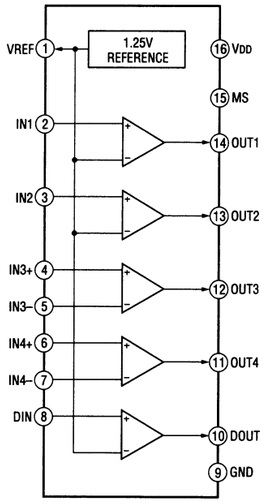

BB BOARD

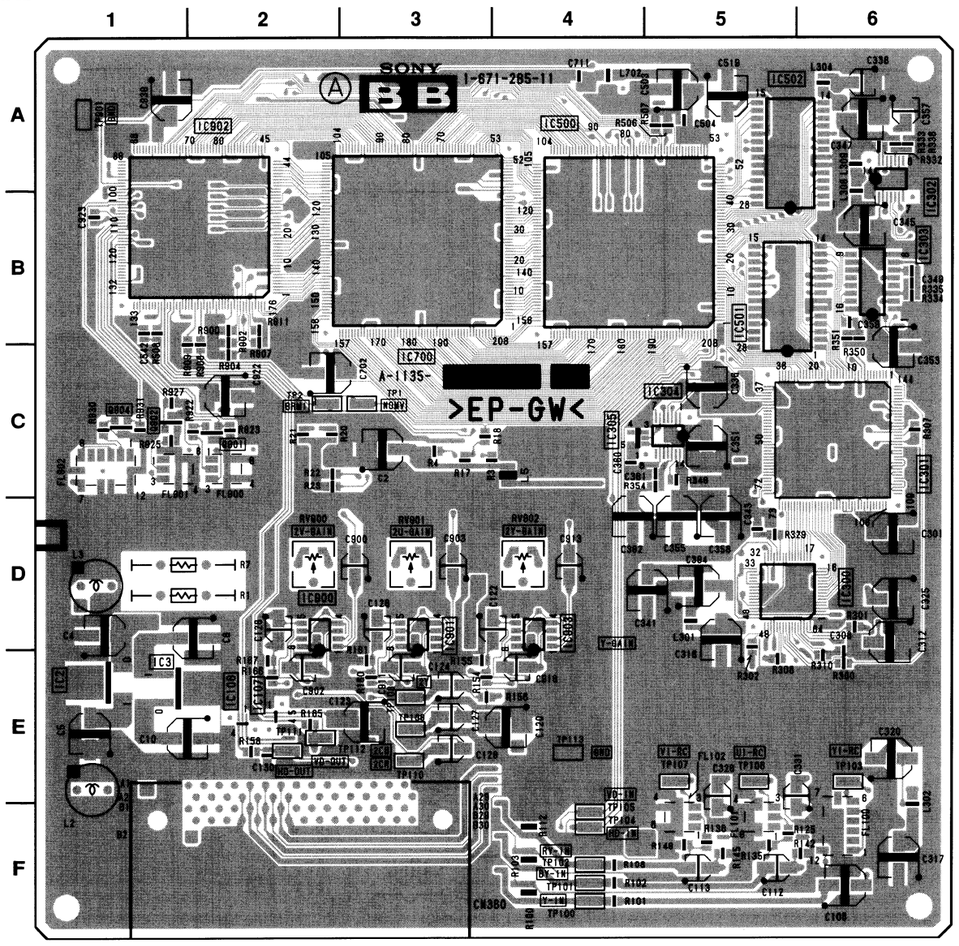

BB BOARD (A SIDE)

IC2	E-1	TP1	C-3
IC3	E-1	TP2	C-2
IC106	E-2	TP100	F-4
IC107	E-2	TP101	F-4
IC300	D-6	TP102	F-4
IC301	C-6	TP103	E-6
IC302	B-6	TP104	F-4
IC303	B-6	TP105	F-4
IC304	C-5	TP106	E-5
IC305	C-4	TP107	E-5
IC500	A-4	TP108	E-3
IC501	B-5	TP109	E-3
IC502	A-5	TP110	E-3
IC700	C-3	TP111	E-2
IC900	D-2	TP112	E-3
IC901	D-3	TP113	E-4
IC902	A-2	TP901	A-1
IC903	D-4		
Q901	C-1		
Q902	C-1		
Q904	C-2		
RV900	D-2		
RV901	D-3		
RV902	D-4		

BB -A SIDE-
SUFFIX: -11

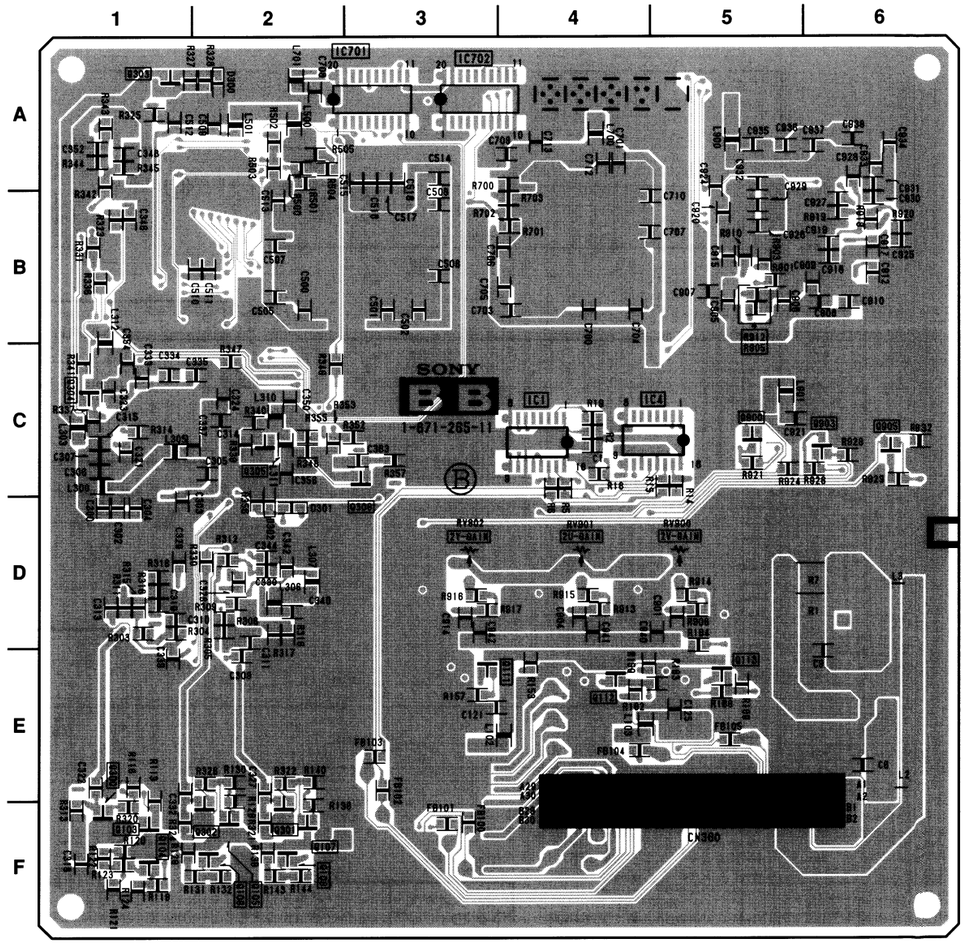

BB BOARD (B SIDE)

D300	A-2	RV900	D-5
D301	D-2	RV901	D-4
D302	D-2	RV902	D-3
IC1	C-4		
IC4	C-5		
IC701	A-3		
IC702	A-3		
Q103	F-1		
Q104	F-1		
Q105	F-2		
Q106	F-2		
Q107	F-2		
Q108	F-2		
Q111	E-4		
Q112	E-4		
Q113	E-5		
Q300	E-1		
Q301	F-2		
Q302	F-2		
Q303	A-1		
Q304	C-1		
Q305	C-2		
Q306	D-3		
Q900	C-5		
Q903	C-6		
Q905	C-6		

BB -B SIDE-
SUFFIX: -11

BB (1/5) BOARD

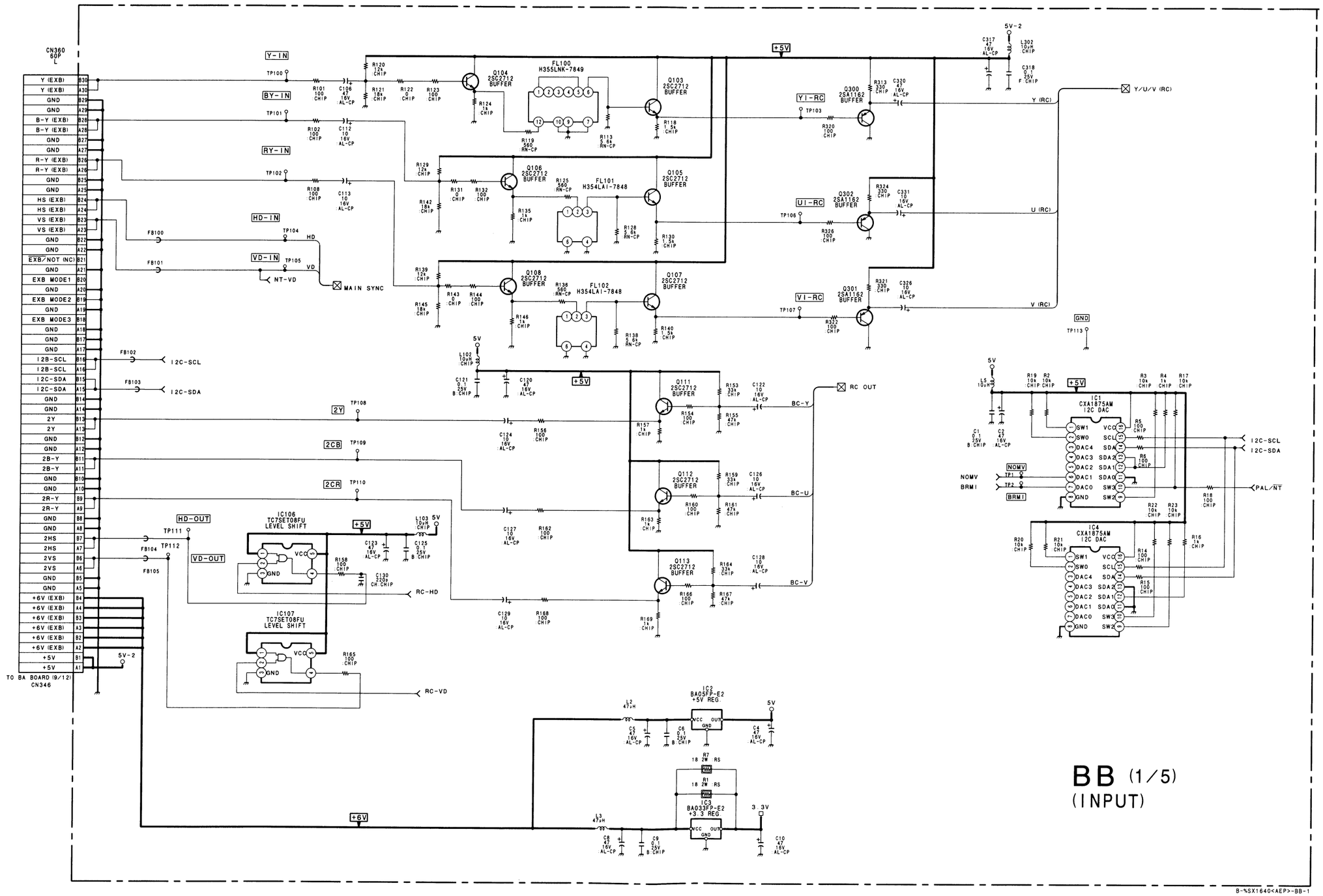

BB (1/5)
(INPUT)

BB (2/5) BOARD

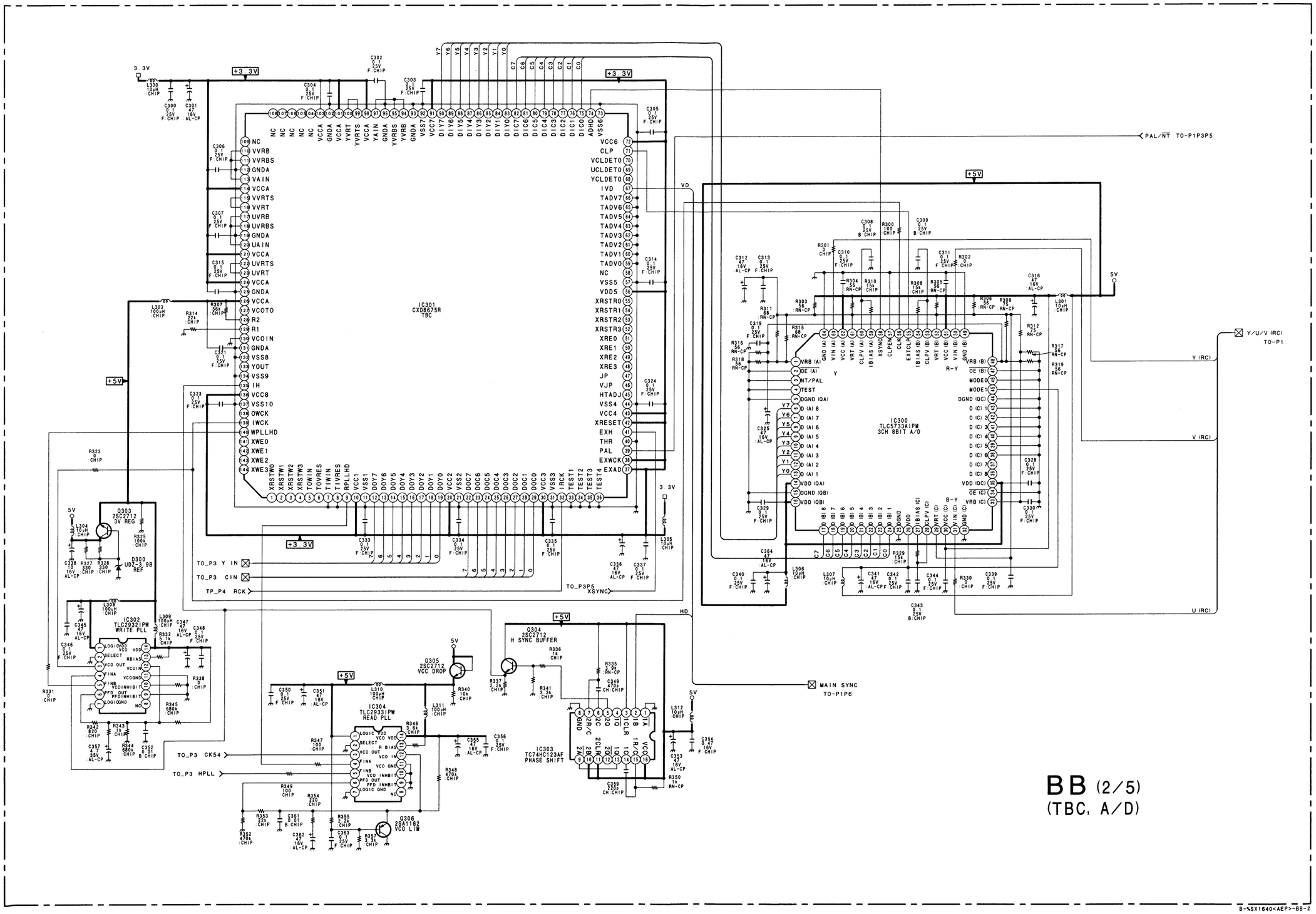
IC301
CXD8675R
TBC
IC300
TLC5733AIPM
3CH 8BIT A/D
IC302
TLC2932IPW
WRITE PLL
IC304
TLC2931IPW
READ PLL
IC303
TC74HC123AF
PHASE SHIFT
Q303
2SC2712
3V REG
Q304
2SC2712
H SYNC BUFFER
Q305
2SC2712
VCC DROP
Q306
2SA1162
VCO LIM
D300
UDZ-3.9B
REF
PAL/NT TO-P1P3P5
Y/U/V (RC)
TO-P1
MAIN SYNC
TO-P1P6
TO_P3 Y IN
TO_P3 CIN
TP_P4 RCK
TO_P3P5
XSYNC
TO_P3 CK54
TO_P3 HPLL
BB (2/5)
(TBC, A/D)
B-%SX1640<AEP>-BB-2

BB (3/5) BOARD

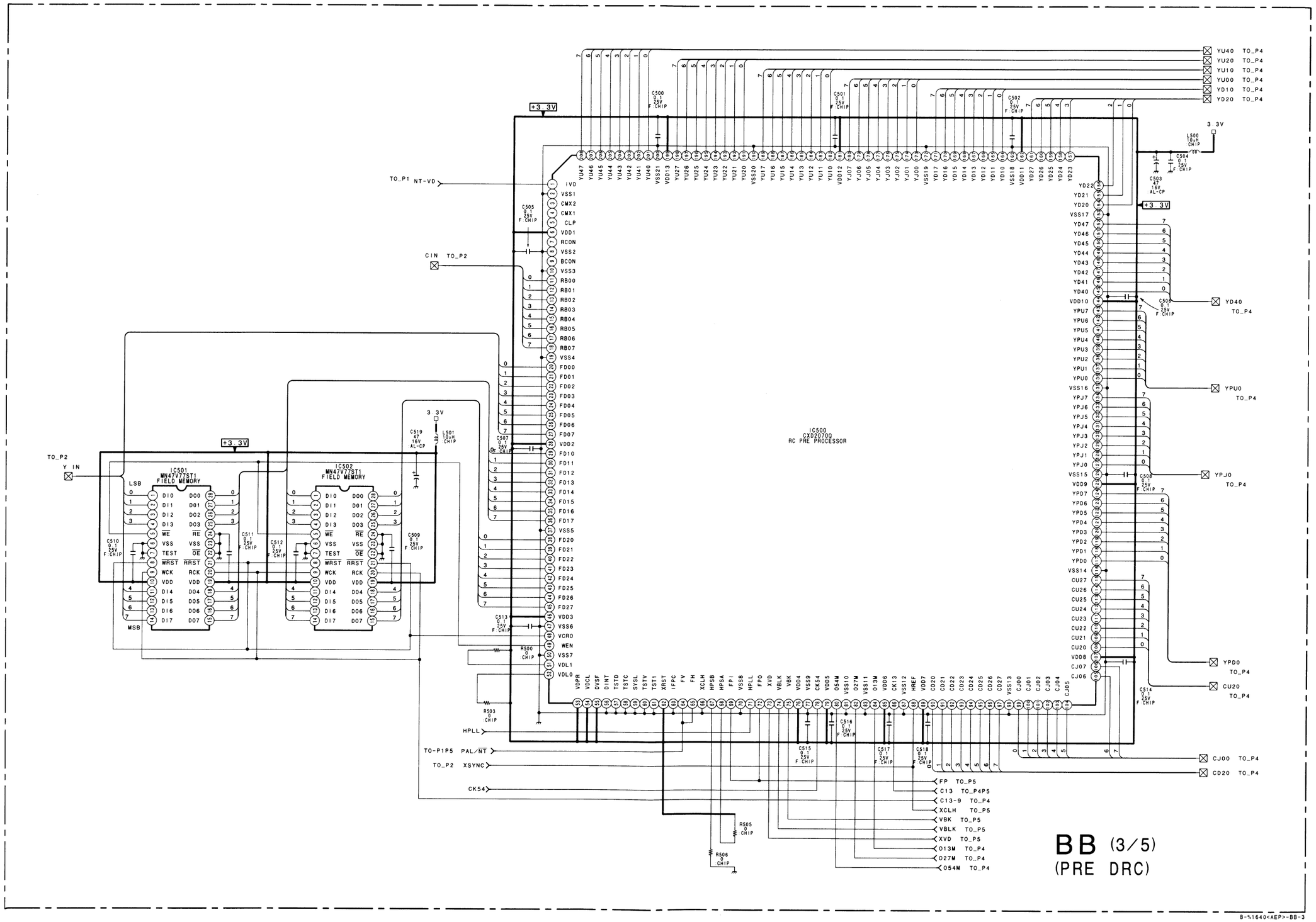
IC500
CXD2070Q
RC PRE PROCESSOR
IC501
MN47V77ST1
FIELD MEMORY
IC502
MN47V77ST1
FIELD MEMORY
+3 3V
3 3V
TO_P1 NT-VD
CIN TO_P2
TO_P2
Y IN
HPLL
TO-P1P5 PAL/NT
TO_P2 XSYNC
CK54
YU40 TO_P4
YU20 TO_P4
YU10 TO_P4
YU00 TO_P4
YD10 TO_P4
YD20 TO_P4
YD40 TO_P4
YPU0 TO_P4
YPJ0 TO_P4
YPD0 TO_P4
CU20 TO_P4
CJ00 TO_P4
CD20 TO_P4
FP TO_P5
C13 TO_P4P5
C13-9 TO_P4
XCLH TO_P5
VBK TO_P5
VBLK TO_P5
XVD TO_P5
013M TO_P4
027M TO_P4
054M TO_P4
BB (3/5)
(PRE DRC)
8-%1640<AEP>-BB-3

BB (4/5) BOARD

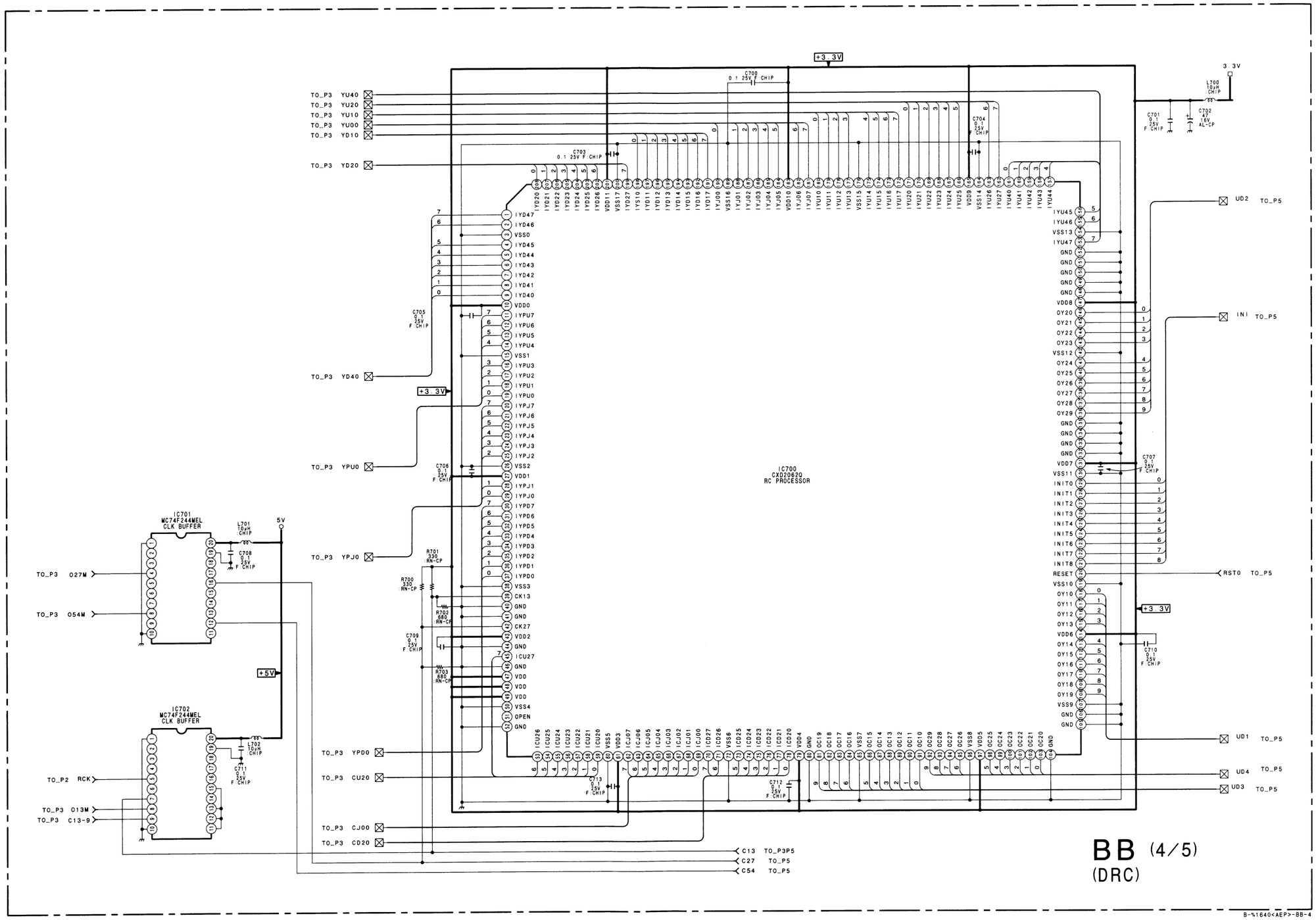
IC700
CXD2062Q
RC PROCESSOR
IC701
MC74F244MEL
CLK BUFFER
IC702
MC74F244MEL
CLK BUFFER
+3.3V
+5V
5V
3.3V
TO_P3 YU40
TO_P3 YU20
TO_P3 YU10
TO_P3 YU00
TO_P3 YD10
TO_P3 YD20
TO_P3 YD40
TO_P3 YPU0
TO_P3 YPJ0
TO_P3 O27M
TO_P3 O54M
TO_P2 RCK
TO_P3 O13M
TO_P3 C13-9
TO_P3 YPD0
TO_P3 CU20
TO_P3 CJ00
TO_P3 CD20
UD2 TO_P5
IN1 TO_P5
RST0 TO_P5
UD1 TO_P5
UD4 TO_P5
UD3 TO_P5
C13 TO_P3P5
C27 TO_P5
C54 TO_P5
BB (4/5)
(DRC)
B-%1640<AEP>-BB-4

BB (5/5) BOARD

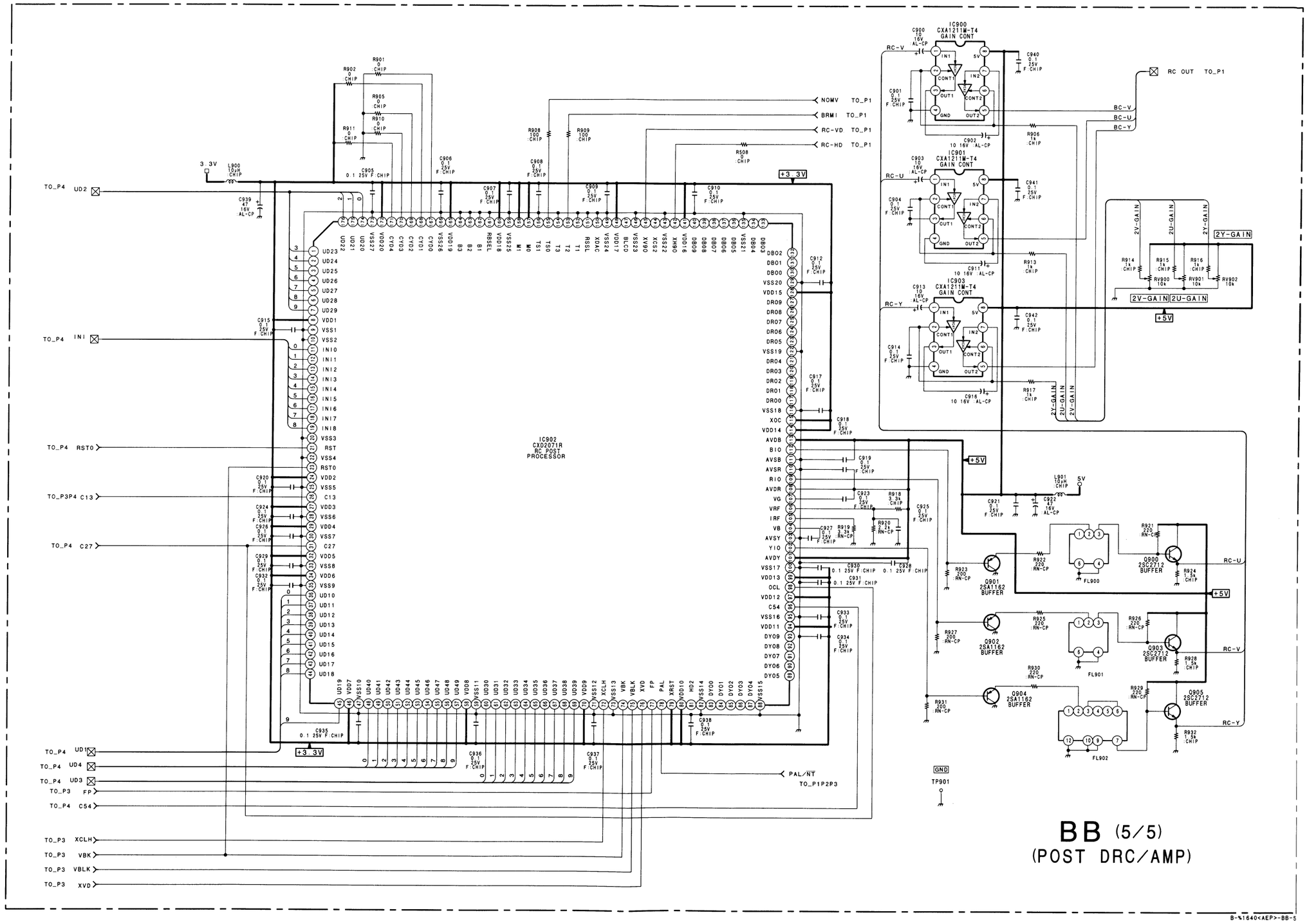

B-%1640<AEP>-BB-5

BB BOARD (1/5) IC1, 4
CXA1875AM

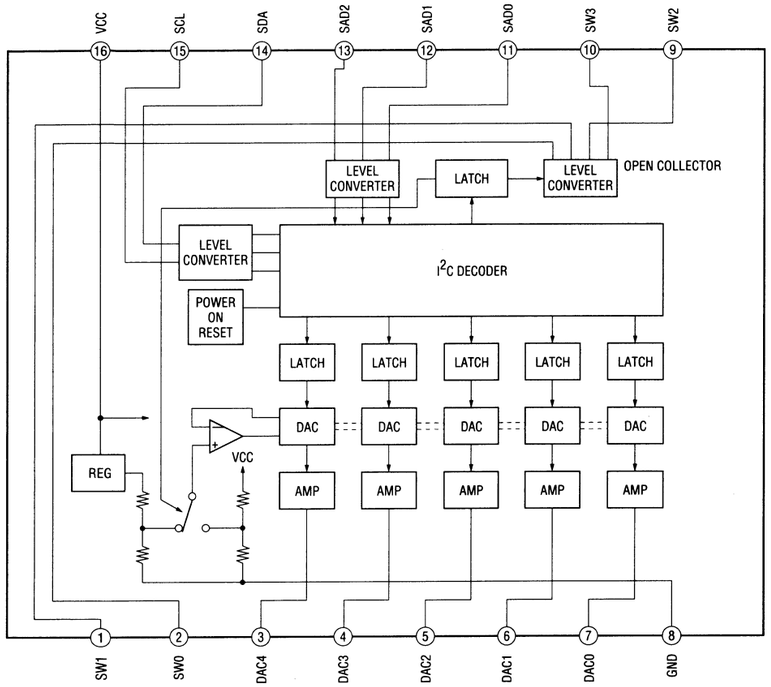

BB BOARD (2/5) IC303
TC74HC123AF

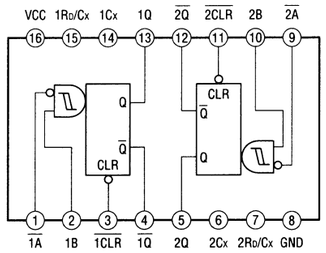

BB BOARD (2/5) IC302, 304
TLC2932IPW

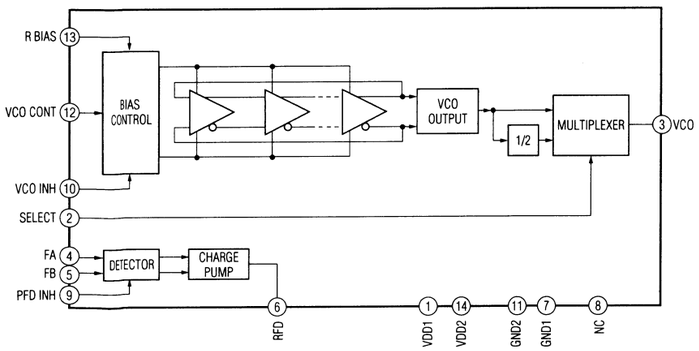

BC BOARD

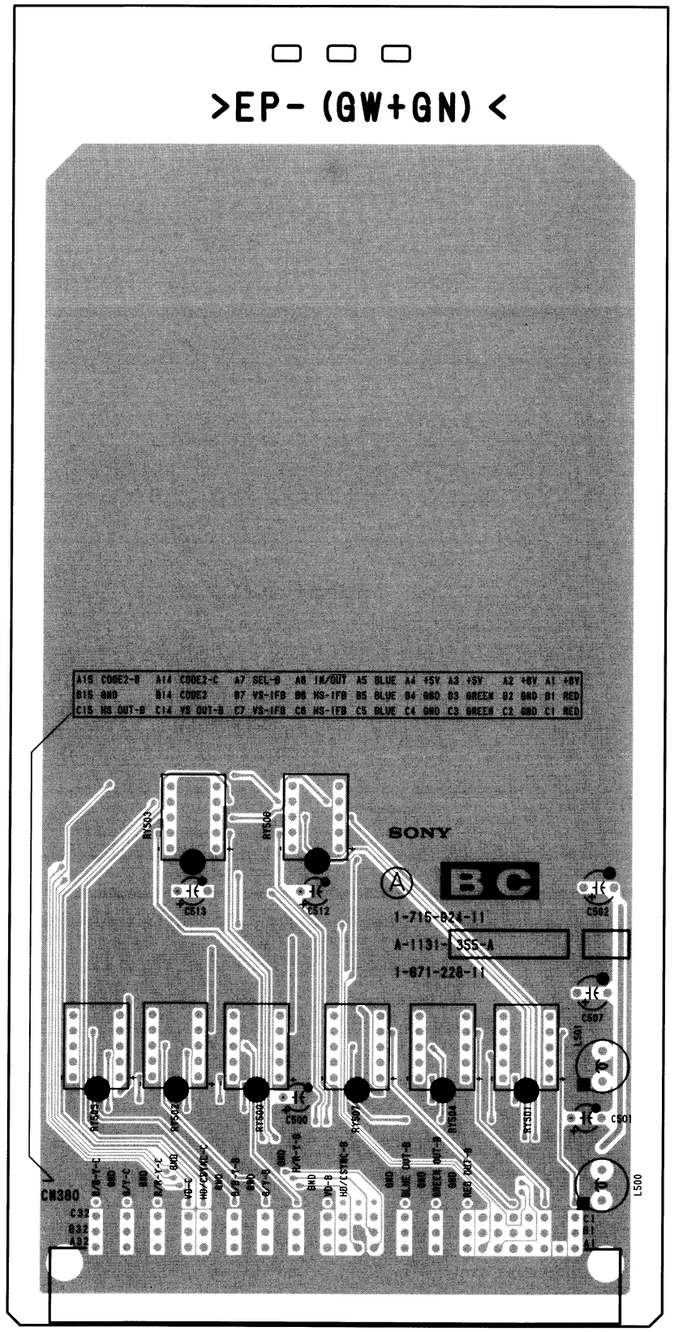

BC -A SIDE-
SUFFIX: -11

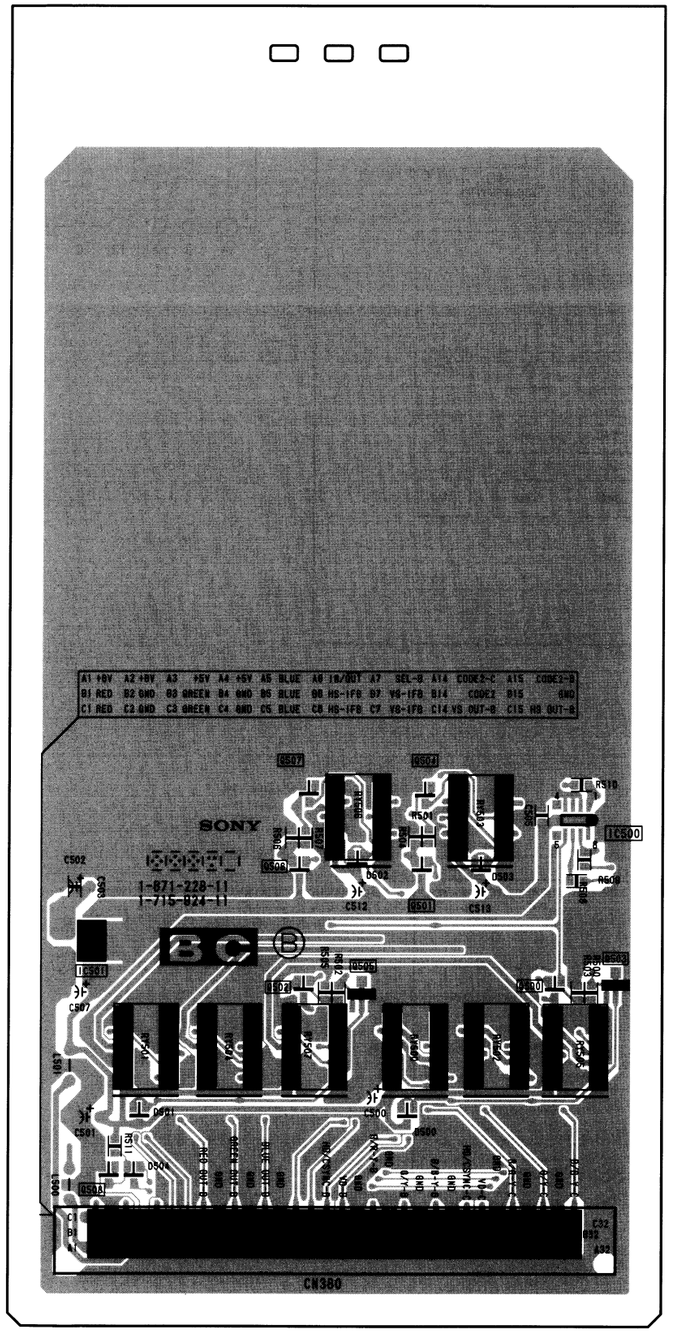

BC -B SIDE-
SUFFIX: -11

BC BOARD

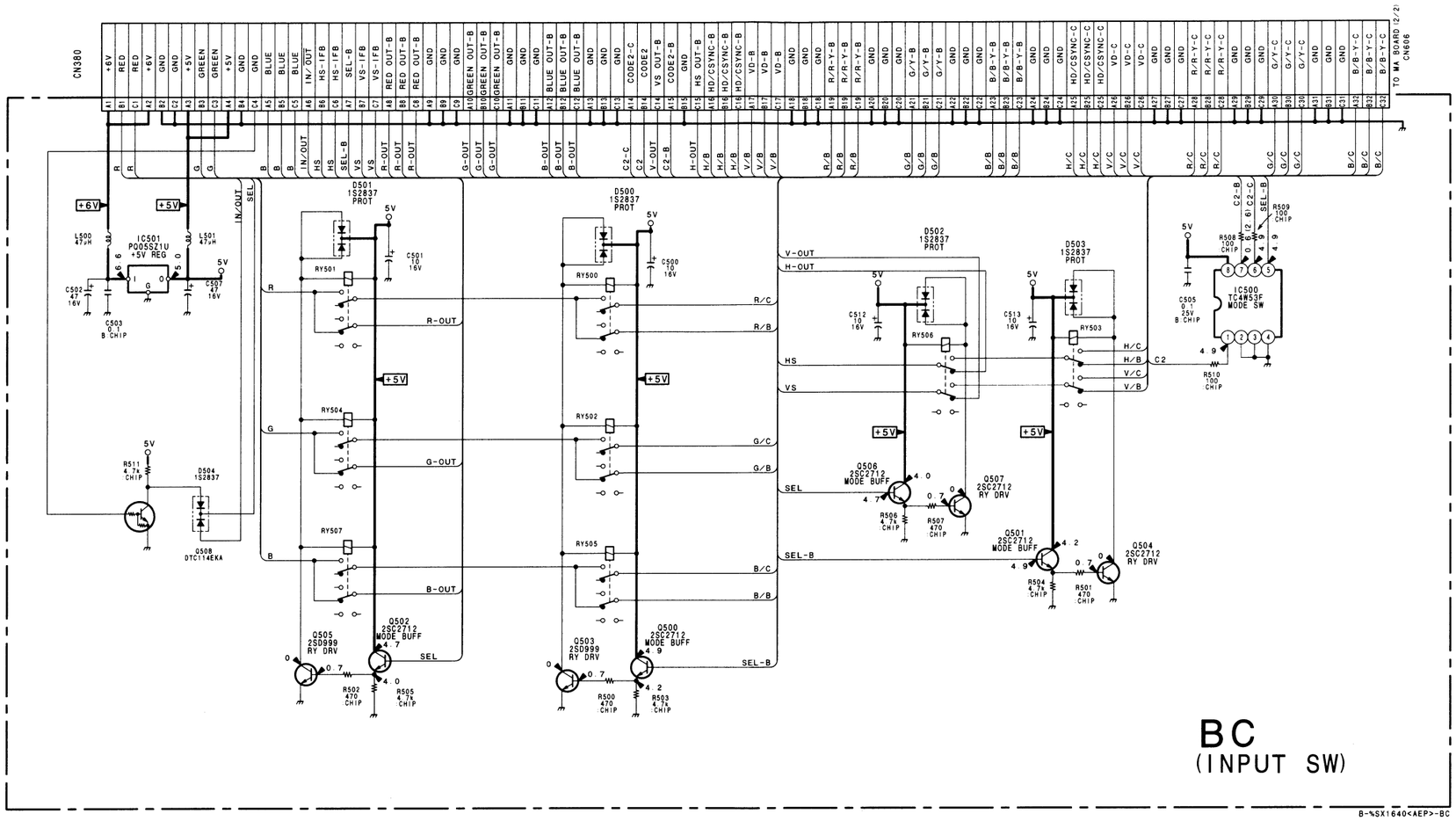

BC BOARD IC500
TC4W53F

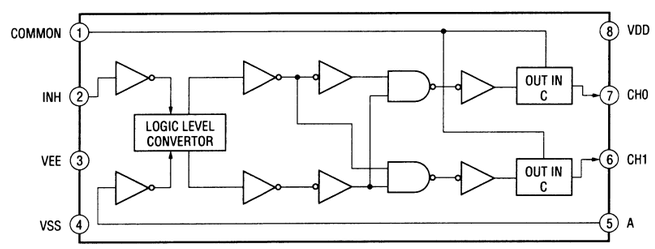

YA BOARD

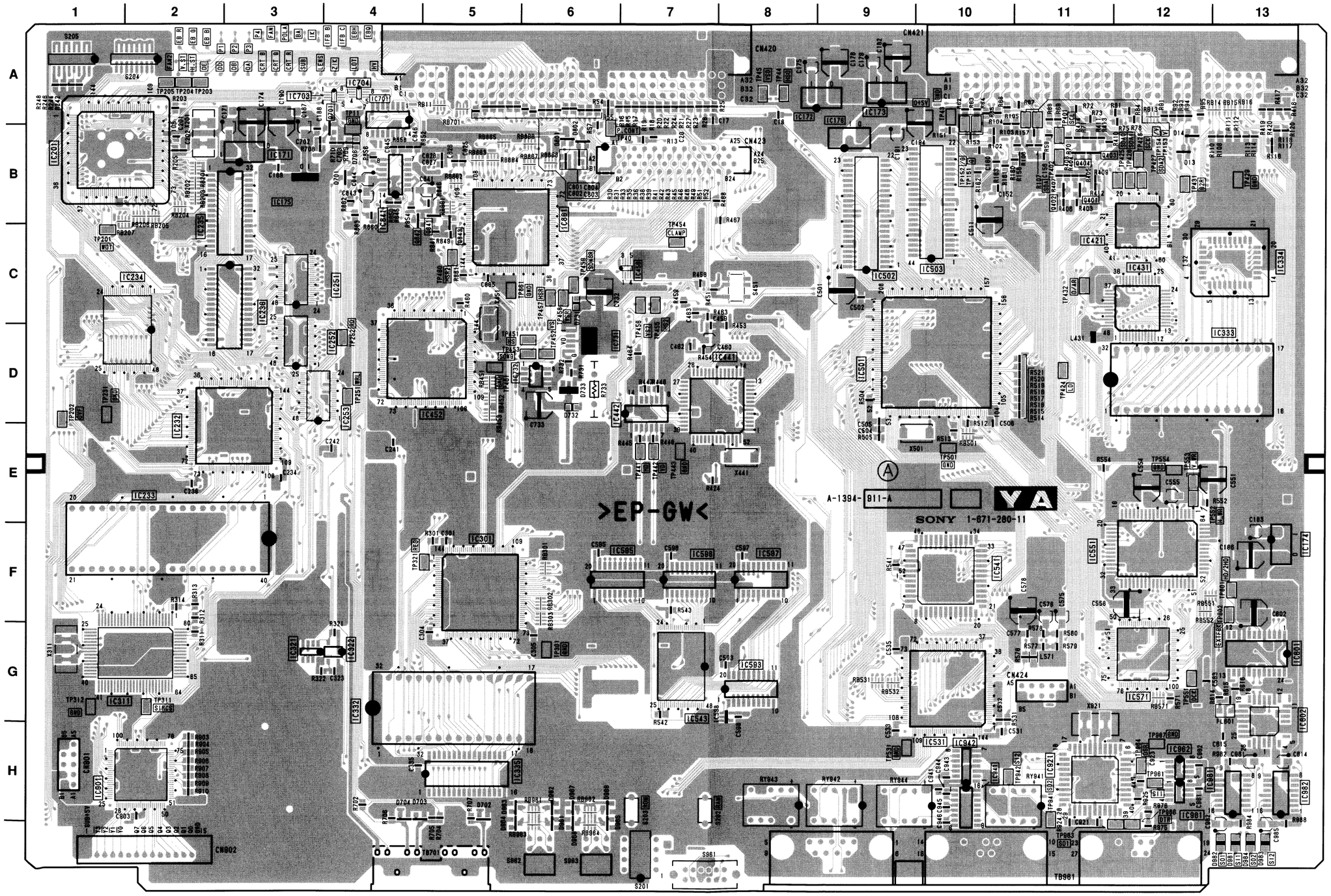

YA -A SIDE-
SUFFIX: -11

YA BOARD (A SIDE)

D13	B-12	TP11	A-4
D14	B-12	TP40	B-7
D701	B-4	TP43	A-10
D702	H-5	TP44	A-8
D703	H-5	TP45	A-8
D704	H-4	TP151	B-10
D706	B-4	TP152	B-10
D731	C-6	TP153	B-12
D732	D-6	TP154	B-12
D733	D-6	TP201	C-1
D801	B-6	TP202	D-1
D802	B-6	TP203	A-2
D961	H-6	TP204	A-2
D962	H-6	TP205	A-2
D963	H-5	TP231	D-1
D964	H-5	TP251	D-4
D965	H-6	TP252	D-4
D966	H-6	TP301	G-6
D967	H-6	TP311	G-2
D968	H-6	TP312	G-1
D981	H-13	TP321	F-4
D982	H-13	TP401	A-11
D983	H-13	TP402	B-11
D984	H-13	TP424	D-11
		TP425	B-12
IC171	B-3	TP426	B-12
IC172	A-8	TP427	B-12
IC173	A-9	TP428	B-12
IC174	F-13	TP429	B-13
IC175	B-3	TP431	B-12
IC176	A-9	TP432	C-11
IC201	B-1	TP441	E-7
IC232	E-2	TP442	E-7
IC233	E-2	TP443	E-7
IC234	C-2	TP451	D-5
IC235	C-2	TP452	D-6
IC238	C-3	TP453	D-5
IC251	C-4	TP454	C-7
IC252	D-4	TP455	D-7
IC253	D-4	TP456	D-7
IC301	F-5	TP457	C-6
IC311	G-1	TP458	C-6
IC321	G-3	TP459	C-6
IC322	G-4	TP461	D-5
IC332	G-4	TP480	C-5
IC333	D-13	TP501	E-10
IC334	C-13	TP531	H-9
IC335	H-5	TP551	G-12
IC421	C-11	TP552	E-13
IC431	C-12	TP553	E-12
IC441	D-8	TP554	E-12
IC442	D-6	TP601	F-13
IC452	D-5	TP602	F-13
IC456	C-7	TP861	C-5
IC501	D-9	TP941	H-11
IC502	C-9	TP942	H-11
IC503	C-10	TP961	H-12
IC531	H-10	TP964	H-12
IC541	F-10	TP967	H-12
IC543	G-7	TP968	H-12
IC551	F-11	TP983	H-11
IC571	G-12		
IC593	G-8		
IC595	F-7		
IC596	F-7		
IC597	F-8		
IC598	G-7		
IC601	G-13		
IC602	G-13		
IC701	A-4		
IC703	A-3		
IC704	A-4		
IC731	D-6		
IC732	D-5		
IC841	B-4		
IC861	B-6		
IC901	H-1		
IC921	H-11		
IC941	H-10		
IC942	H-10		
IC961	H-12		
IC962	H-12		
IC981	H-12		
IC982	H-13		
Q401	B-11		
Q402	B-11		
Q403	B-11		
Q404	B-11		
Q701	A-4		
Q841	C-5		
Q842	C-4		
Q843	C-5		

10-49

YA BOARD

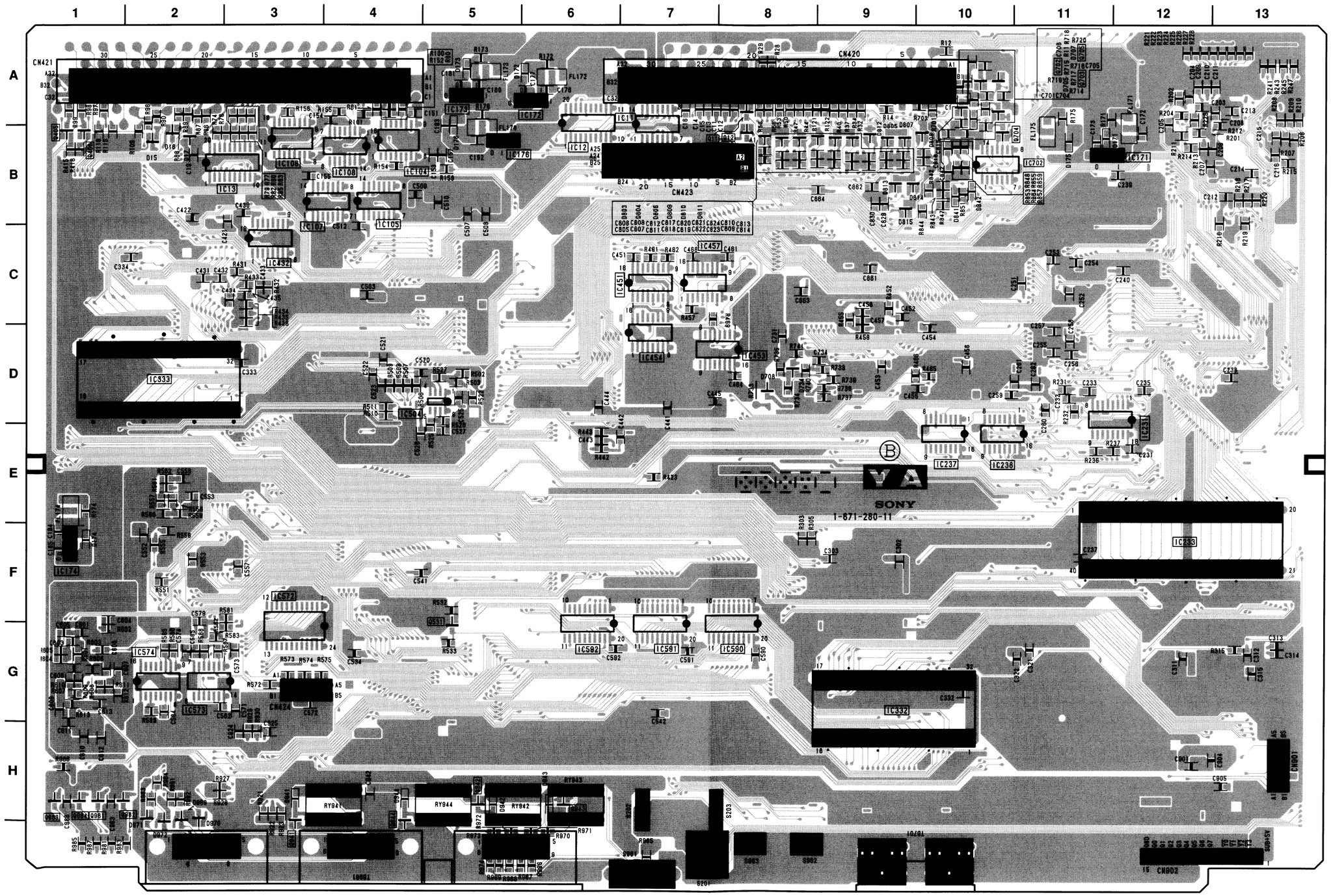

YA -B SIDE-
SUFFIX: -11

YA BOARD (B SIDE)

D15	B-2
D16	B-2
D17	B-2
D171	B-11
D172	A-5
D173	A-5
D174	F-1
D175	B-11
D176	B-5
D705	A-11
D707	A-11
D708	D-8
D734	D-8
D803	B-7
D804	B-7
D805	B-9
D806	B-7
D807	A-9
D809	B-7
D809	B-10
D810	B-7
D811	B-7
D812	B-9
D813	B-9
D814	B-9
D815	B-9
D841	B-10
D842	B-10
D941	H-3
D942	H-5
D943	H-6
D944	H-4
D969	H-2
D970	H-2
D971	H-2
D972	H-2
IC174	F-1
IC231	E-12
IC233	F-12
IC332	G-9
IC572	F-3
IC573	G-2
IC574	G-2
IC590	G-8
IC591	G-7
IC592	G-6
Q11	B-7
Q12	B-8
Q405	B-1
Q406	B-1
Q531	F-5
Q702	A-11
Q703	A-11
Q704	B-10
Q705	A-11
Q941	H-3
Q942	H-5
Q943	H-6
Q944	H-4
Q981	H-1
Q982	H-2
Q983	H-1
Q984	H-1

10-51

YA (1/10) BOARD

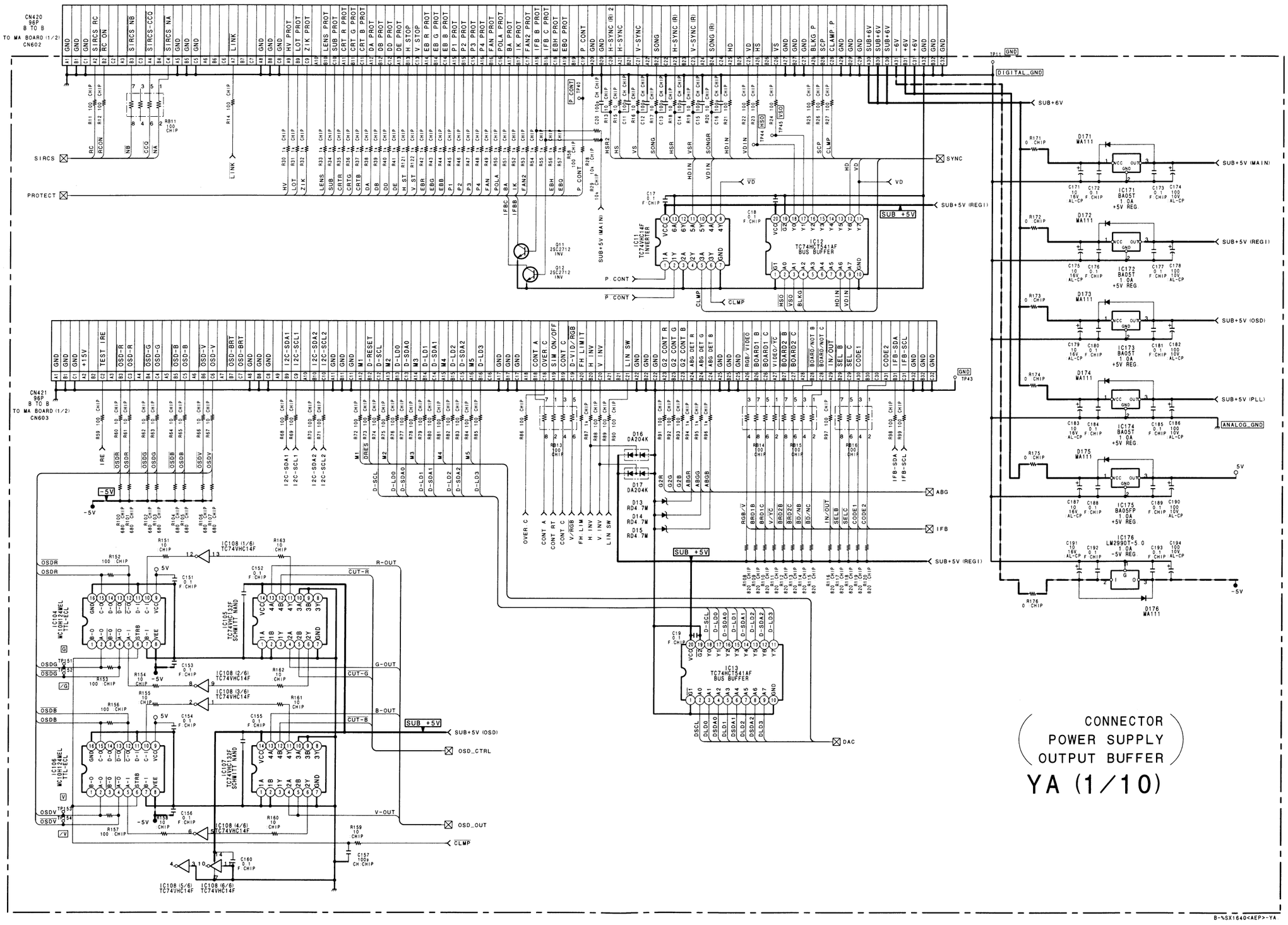

B-%SX1640<AEP>-YA

YA (2/10) BOARD

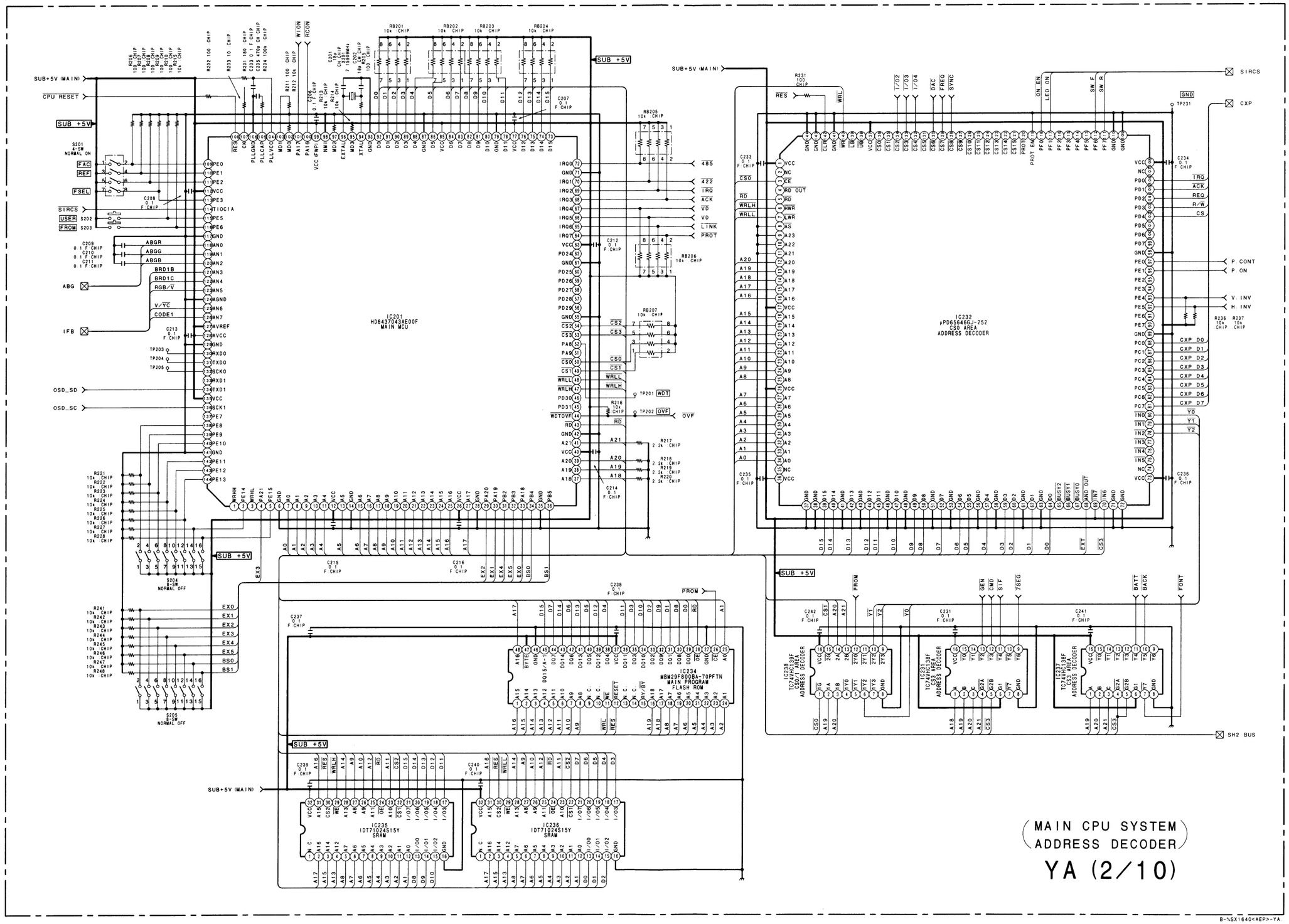
IC201
HD6437043AE00F
MAIN MCU
IC232
μPD65646GJ-252
CSO AREA
ADDRESS DECODER
IC234
MBM29F800BA-70PFTN
MAIN PROGRAM
FLASH ROM
IC235
IDT71024S15Y
SRAM
IC236
IDT71024S15Y
SRAM
IC238
TC74VHC138F
CSO/1 AREA
ADDRESS DECODER
IC231
TC74VHC138F
CS2 AREA
ADDRESS DECODER
IC237
TC74VHC138F
CS3 AREA
ADDRESS DECODER
SUB +5V
SUB+5V (MAIN)
CPU RESET
SIRCS
CXP
SH2 BUS
MAIN CPU SYSTEM
ADDRESS DECODER
YA (2/10)

YA (3/10) BOARD

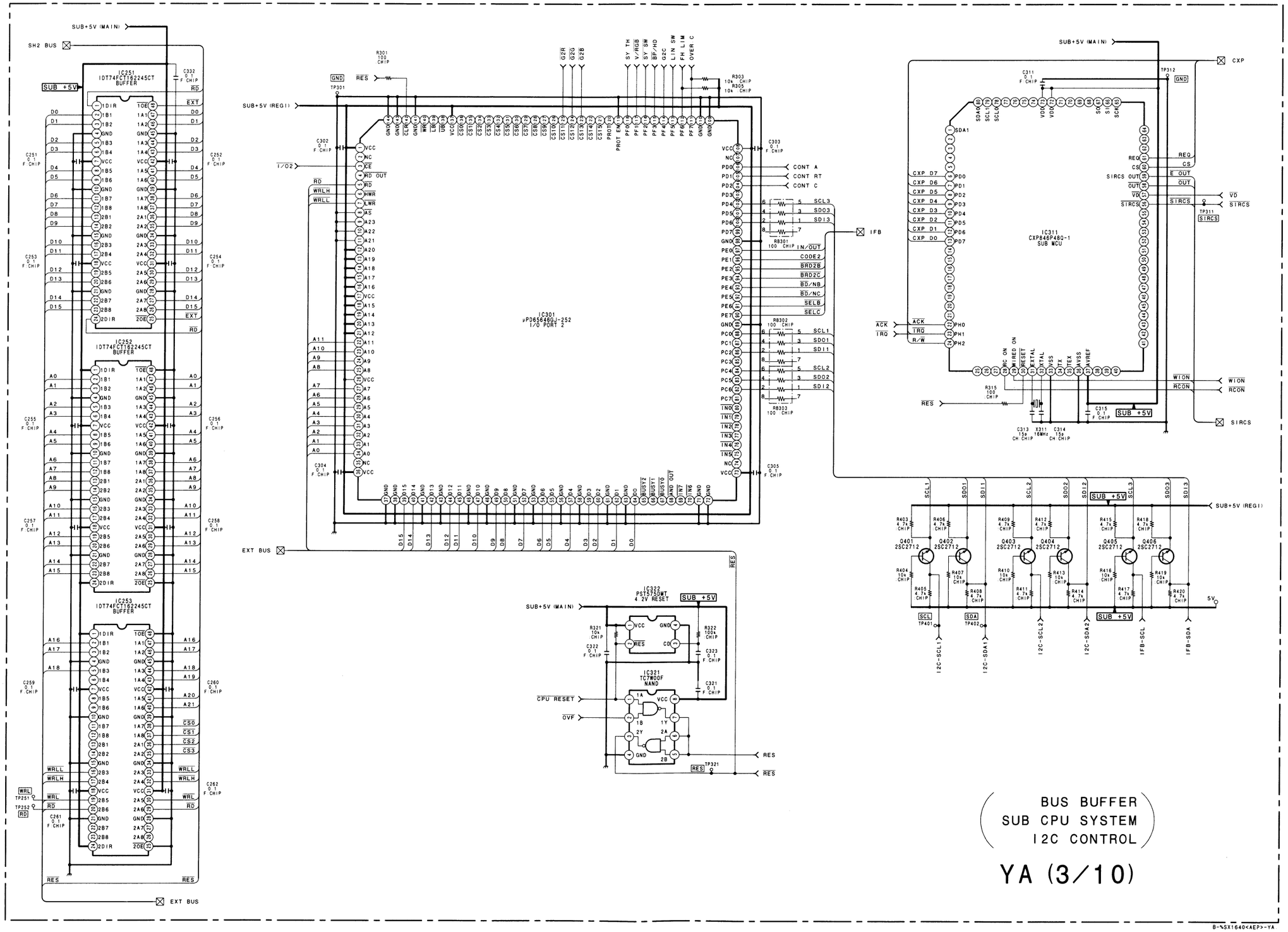

B-7SX1640<AEP>-YA

YA (4/10) BOARD

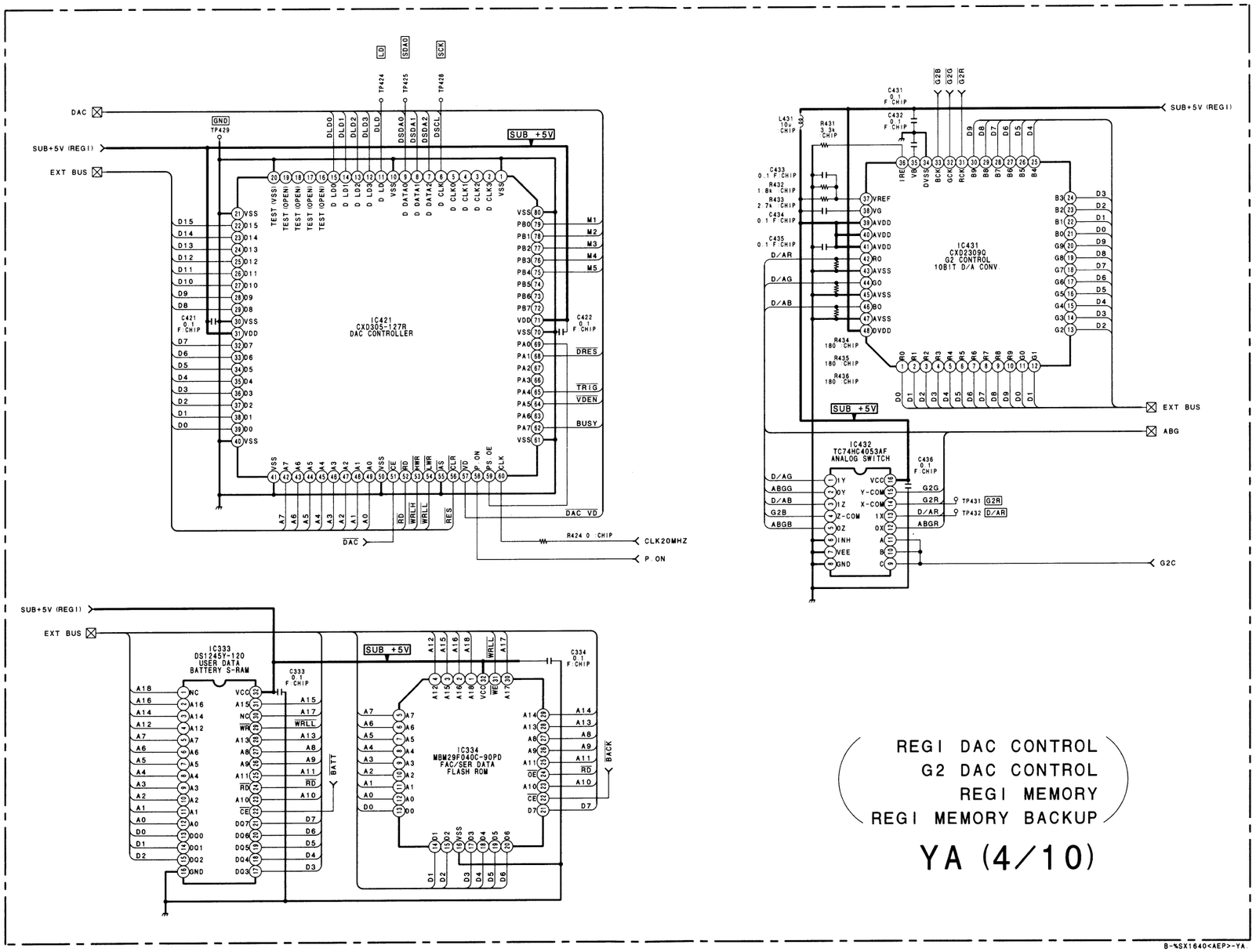
IC421
CXD3051-127R
DAC CONTROLLER
IC431
CXD2309Q
G2 CONTROL
10BIT D/A CONV.
IC432
TC74HC4053AF
ANALOG SWITCH
IC333
DS1245Y-120
USER DATA
BATTERY S-RAM
IC334
MBM29F040C-90PD
FAC/SER DATA
FLASH ROM
SUB +5V
SUB+5V (REGI)
EXT BUS
DAC
CLK20MHZ
P ON
ABG
G2C
BATT
BACK
REGI DAC CONTROL
G2 DAC CONTROL
REGI MEMORY
REGI MEMORY BACKUP
YA (4/10)

YA (5/10) BOARD

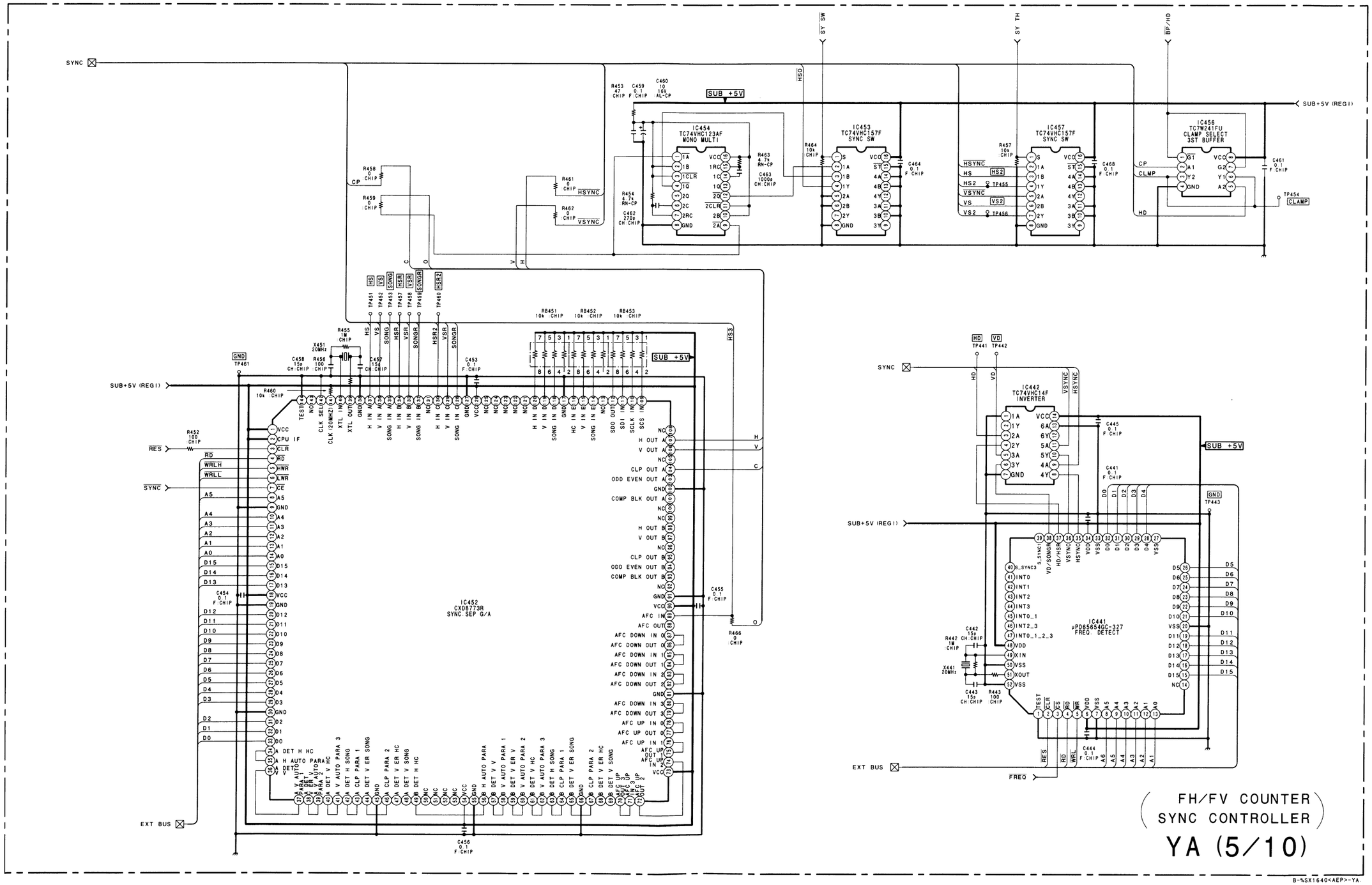
IC452
CXD8773R
SYNC SEP G/A
IC454
TC74VHC123AF
MONO MULTI
IC453
TC74VHC157F
SYNC SW
IC457
TC74VHC157F
SYNC SW
IC456
TC7W241FU
CLAMP SELECT
3ST BUFFER
IC442
TC74VHC14F
INVERTER
IC441
μPD65654GC-327
FREQ. DETECT
SUB +5V
SUB+5V (REG1)
SYNC
EXT BUS
FREQ
FH/FV COUNTER
SYNC CONTROLLER
YA (5/10)
B-%SX1640<AEP>-YA

YA (6/10) BOARD

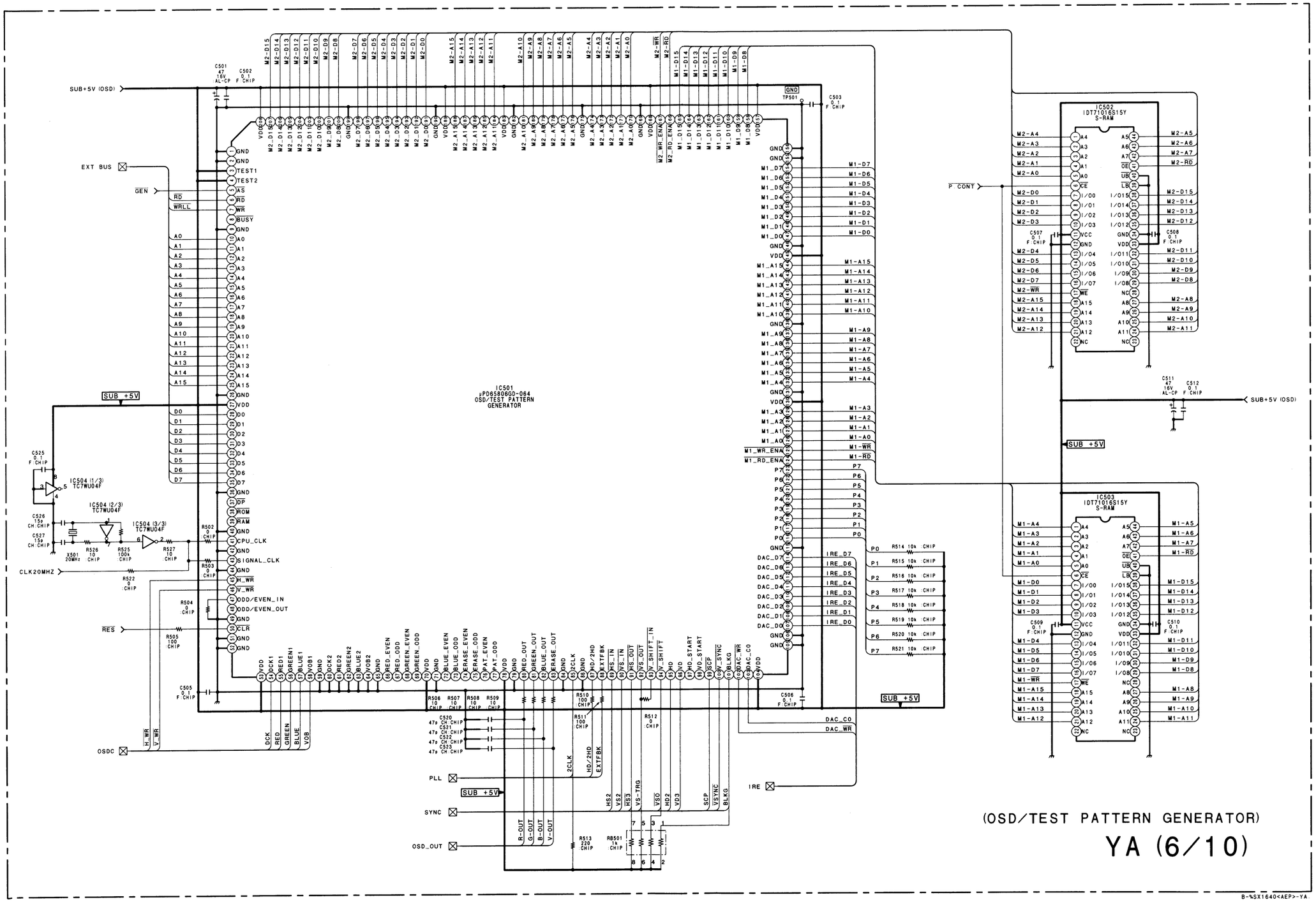
IC501
μPD65806GD-064
OSD/TEST PATTERN
GENERATOR
IC502
IDT71016S15Y
S-RAM
IC503
IDT71016S15Y
S-RAM
IC504 (1/3)
TC7WU04F
IC504 (2/3)
TC7WU04F
IC504 (3/3)
TC7WU04F
SUB+5V (OSD)
SUB +5V
EXT BUS
GEN
P CONT
CLK20MHZ
RES
OSDC
PLL
SYNC
OSD_OUT
IRE
(OSD/TEST PATTERN GENERATOR)
YA (6/10)
B-%SX1640<AEP>-YA

YA (7/10) BOARD

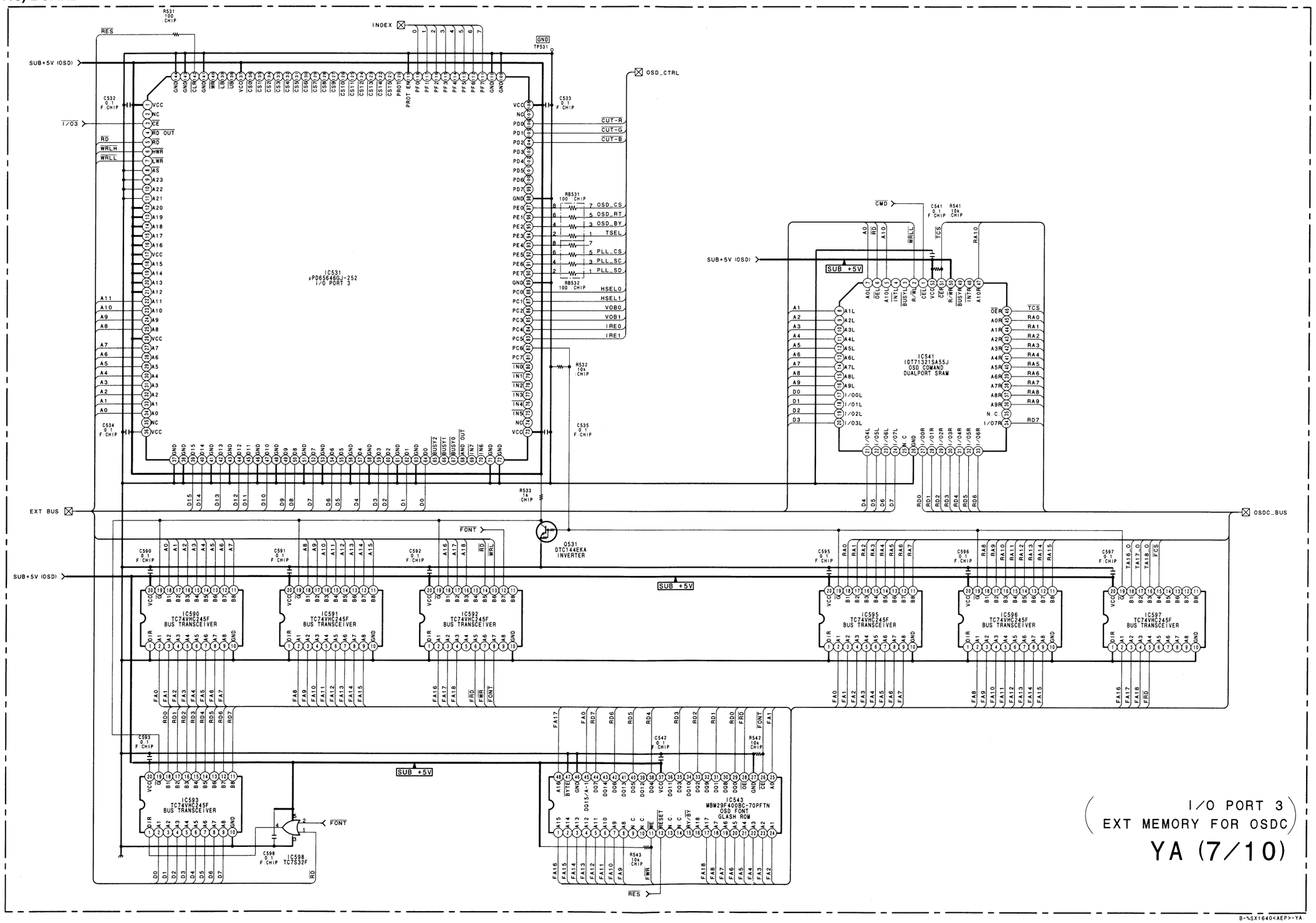

B-%SX1640<AEP>-YA

YA (8/10) BOARD

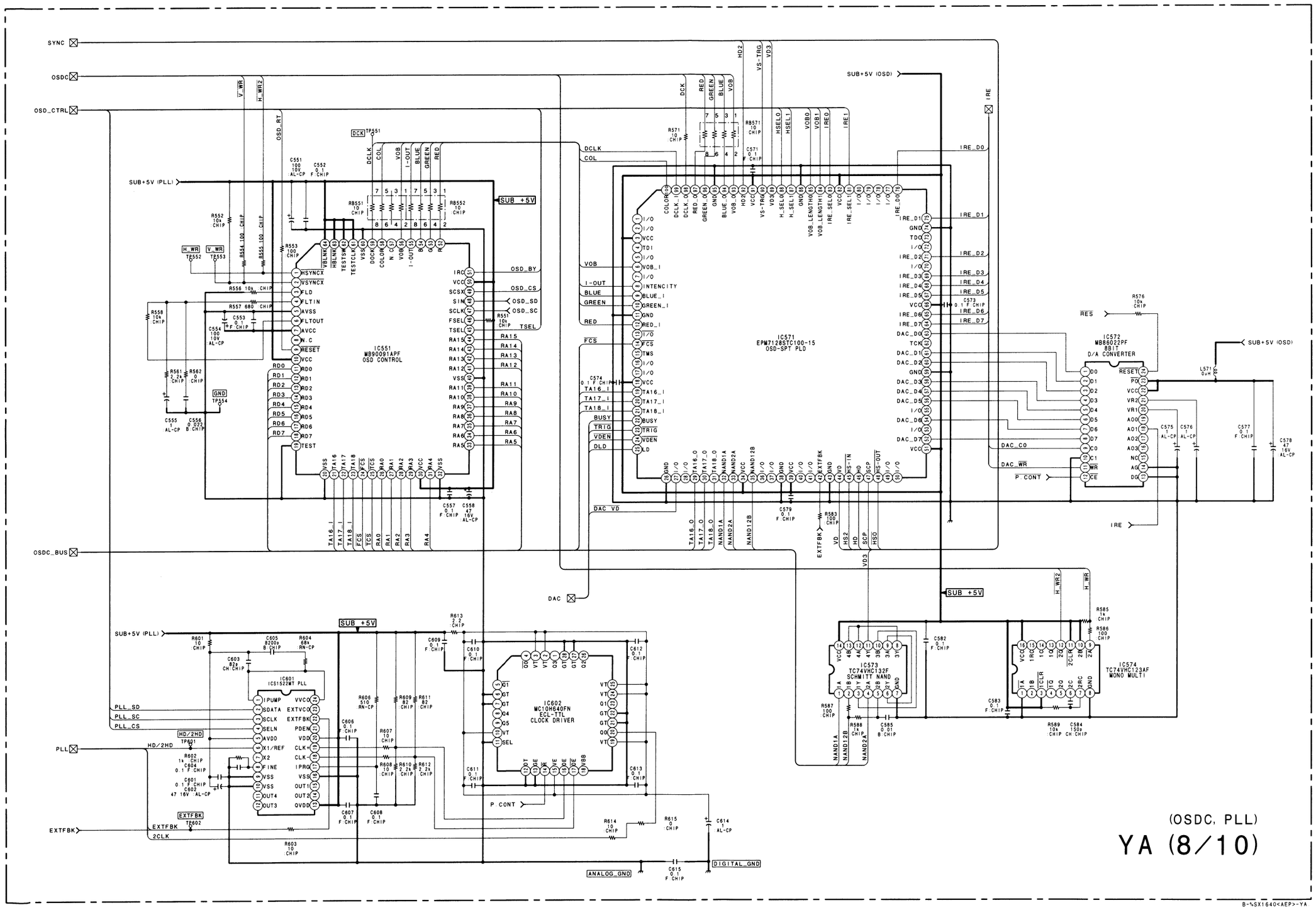
SYNC
OSDC
OSD_CTRL
OSDC_BUS
DAC
PLL
EXTFBK
SUB+5V (PLL)
SUB +5V
SUB+5V (OSD)
IC551
MB90091APF
OSD CONTROL
IC571
EPM7128STC100-15
OSD-SPT PLD
IC572
MB86022PF
8BIT
D/A CONVERTER
IC573
TC74VHC132F
SCHMITT NAND
IC574
TC74VHC123AF
MONO MULTI
IC601
ICS1522MT PLL
IC602
MC10H640FN
ECL-TTL
CLOCK DRIVER
ANALOG_GND
DIGITAL_GND
(OSDC, PLL)
YA (8/10)

YA (9/10) BOARD

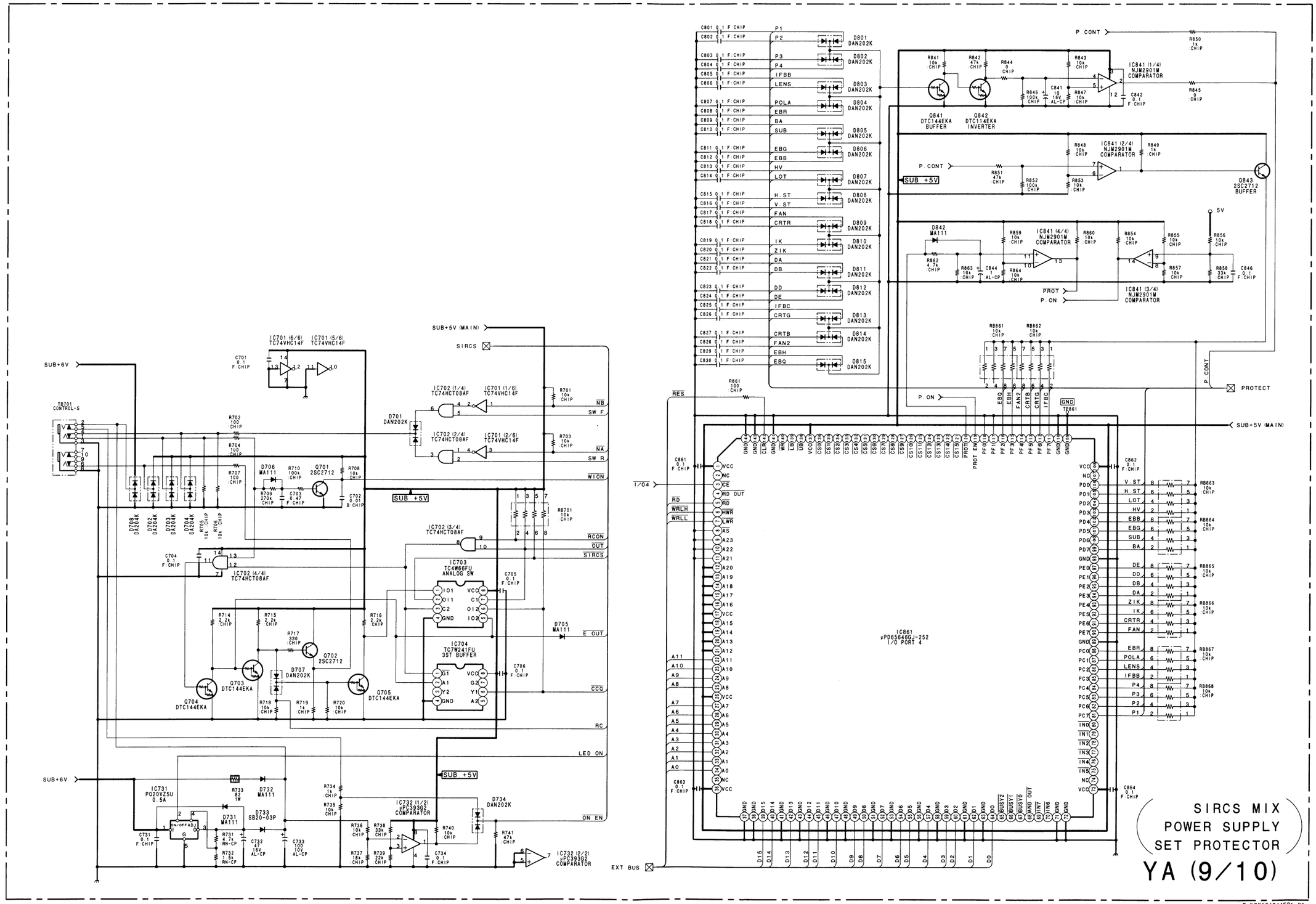
SIRCS MIX
POWER SUPPLY
SET PROTECTOR
YA (9/10)
IC861
μPD65646GJ-252
I/O PORT 4
IC703
TC4W66FU
ANALOG SW
IC704
TC7W241FU
3ST BUFFER
IC732 (1/2)
μPC393G2
COMPARATOR
IC732 (2/2)
μPC393G2
COMPARATOR
IC841 (1/4)
NJM2901M
COMPARATOR
IC841 (2/4)
NJM2901M
COMPARATOR
IC841 (3/4)
NJM2901M
COMPARATOR
IC841 (4/4)
NJM2901M
COMPARATOR
IC731
PQ20VZ5U
0.5A
SUB+6V
SUB+5V (MAIN)
SUB +5V
P CONT
PROTECT
PROT
P ON
EXT BUS
T8701
CONTROL-S
T8861
B-%SX1640<AEP>-YA

YA (10/10) BOARD

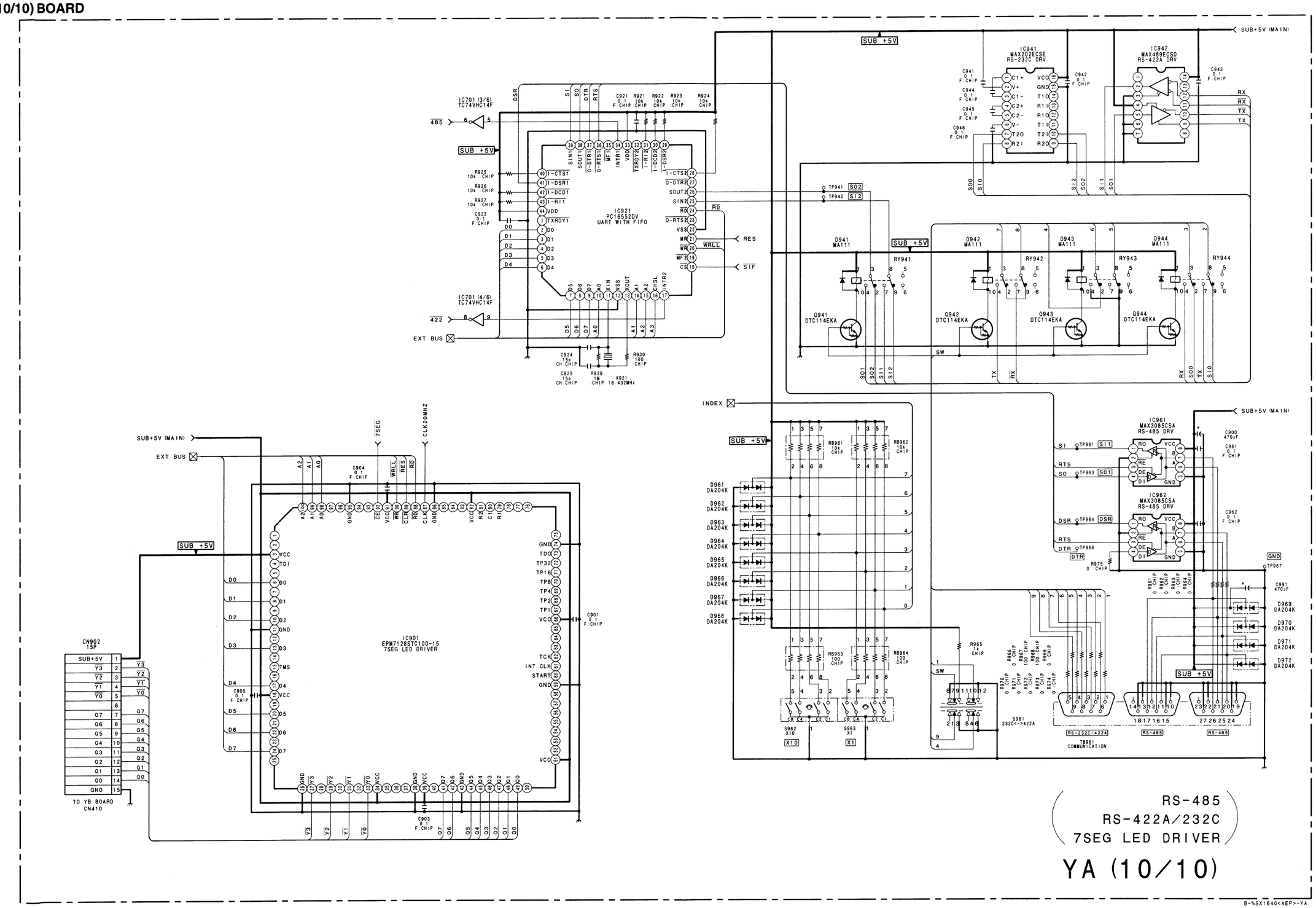

YA BOARD (1/10) IC104, 106
MC10H124MEL

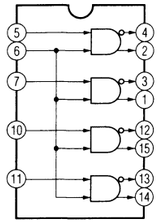

YA BOARD (4/10) IC432
TC74HC4053A

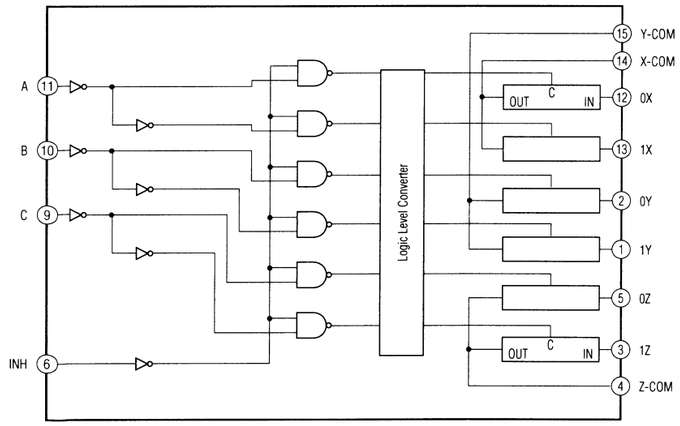

YA BOARD (5/10) IC456
TC7W241FU

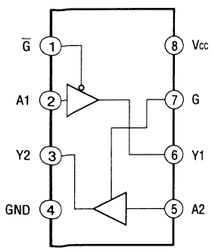

YA BOARD (4/10) IC431
CXD2309Q

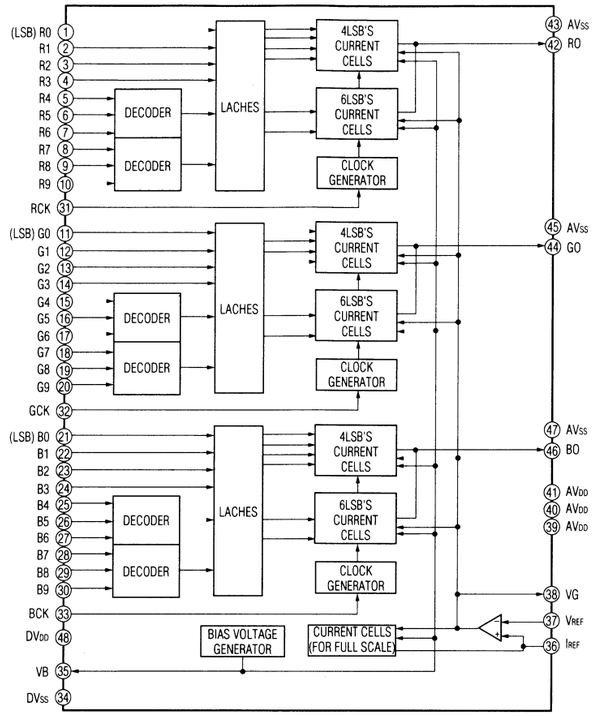

YA BOARD (5/10) IC454
YA BOARD (8/10) IC574
TC74VHC123AF

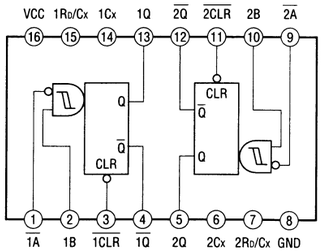

YA BOARD (7/10) IC590-593, 595-597
TC74VHC245F

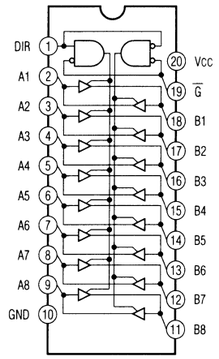

YA BOARD (8/10) IC572
MB86022PF

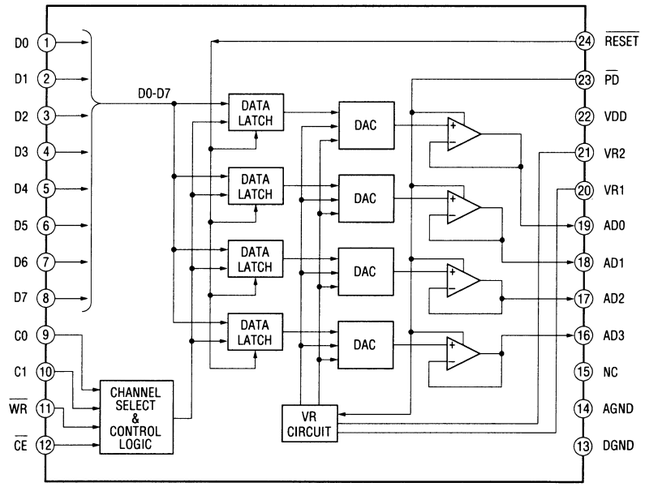

YA BOARD (8/10) IC573
TC74VHC132F

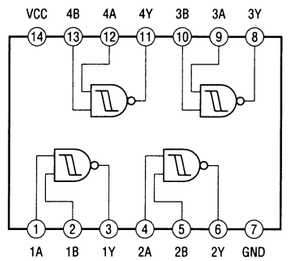

YA BOARD (8/10) IC602
MC10H640FN

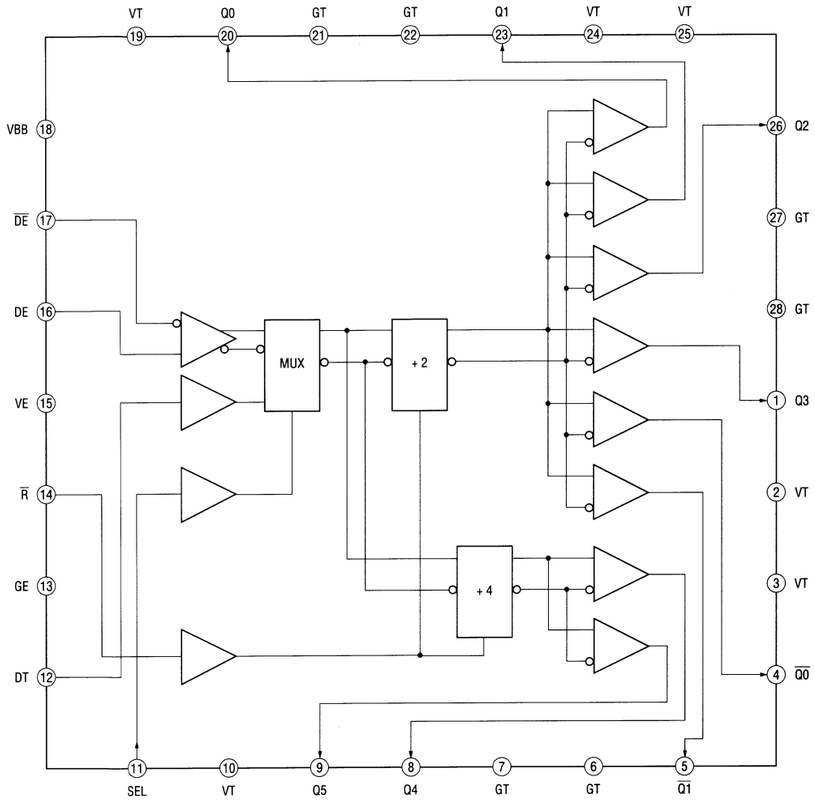

YA BOARD (9/10) IC703
TC4W66FU

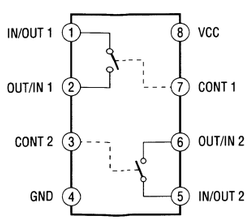

YA BOARD (9/10) IC704
TC7W241FU

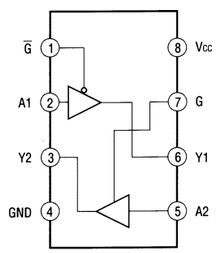

YA BOARD (10/10) IC961, 962
MAX3085CSA

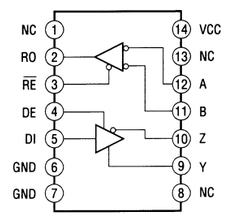

YB BOARD

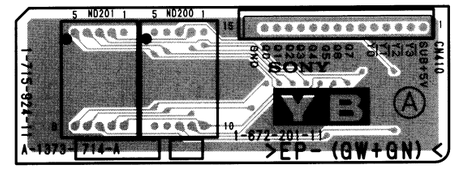

YA -B SIDE-
SUFFIX: -11

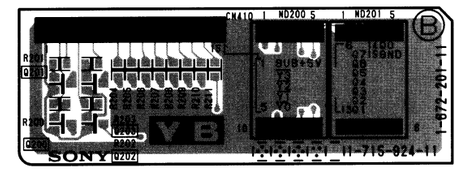

YB -B SIDE-
SUFFIX: -11

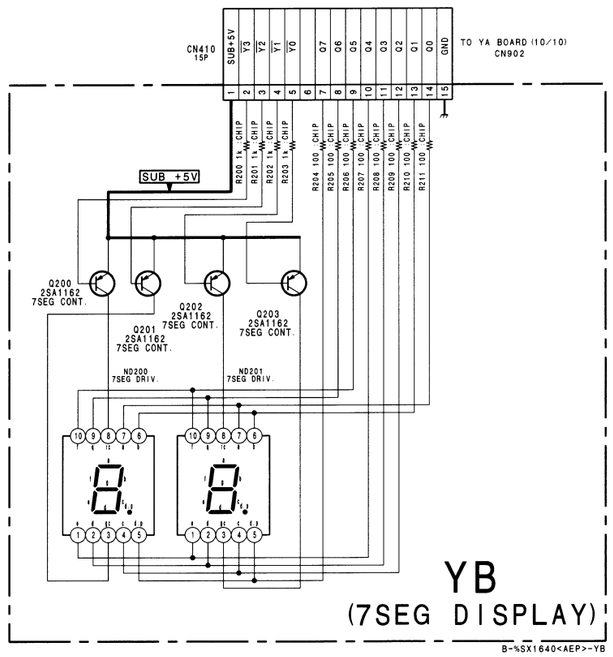

DA BOARD (A SIDE)

D101 C-5
D103 C-5
D105 E-1
D351 E-5
D352 E-5

IC101 B-3
IC102 C-5
IC103 E-2
IC104 C-3
IC105 C-4
IC106 B-1
IC107 B-3
IC108 E-3
IC108 F-2
IC110 D-3
IC112 B-2
IC113 C-2
IC114 B-3
IC115 A-4
IC116 A-5
IC117 B-5
IC301 B-7
IC302 B-8
IC303 B-7
IC305 C-7
IC307 D-7
IC308 C-7
IC308 D-8
IC309 C-7
IC310 D-6
IC311 C-6
IC312 D-6
IC313 C-6
IC314 C-7
IC351 E-8
IC352 E-7
IC353 D-5
IC354 E-8
IC355 E-4
IC401 E-5
IC402 E-6
IC403 B-6
IC405 E-7
IC406 B-5
IC407 E-5
IC451 F-8
IC452 G-7

Q101 C-3
Q102 F-2
Q105 C-3
Q109 C-3
Q110 D-3
Q116 C-1
Q118 D-1
Q301 D-6
Q354 G-6
Q401 E-6
Q402 D-6
Q451 F-7
Q811 B-2

RV101 A-3
RV102 A-2
RV103 A-4
RV104 A-3
RV105 A-3
RV301 A-7
RV302 A-7
RV303 A-7
RV402 A-5
RV403 A-6

TP101 F-3
TP102 F-2
TP103 F-3
TP104 C-2
TP105 B-5
TP106 C-4
TP107 E-4
TP301 D-5
TP401 F-5
TP402 F-5
TP403 C-5

DA BOARD

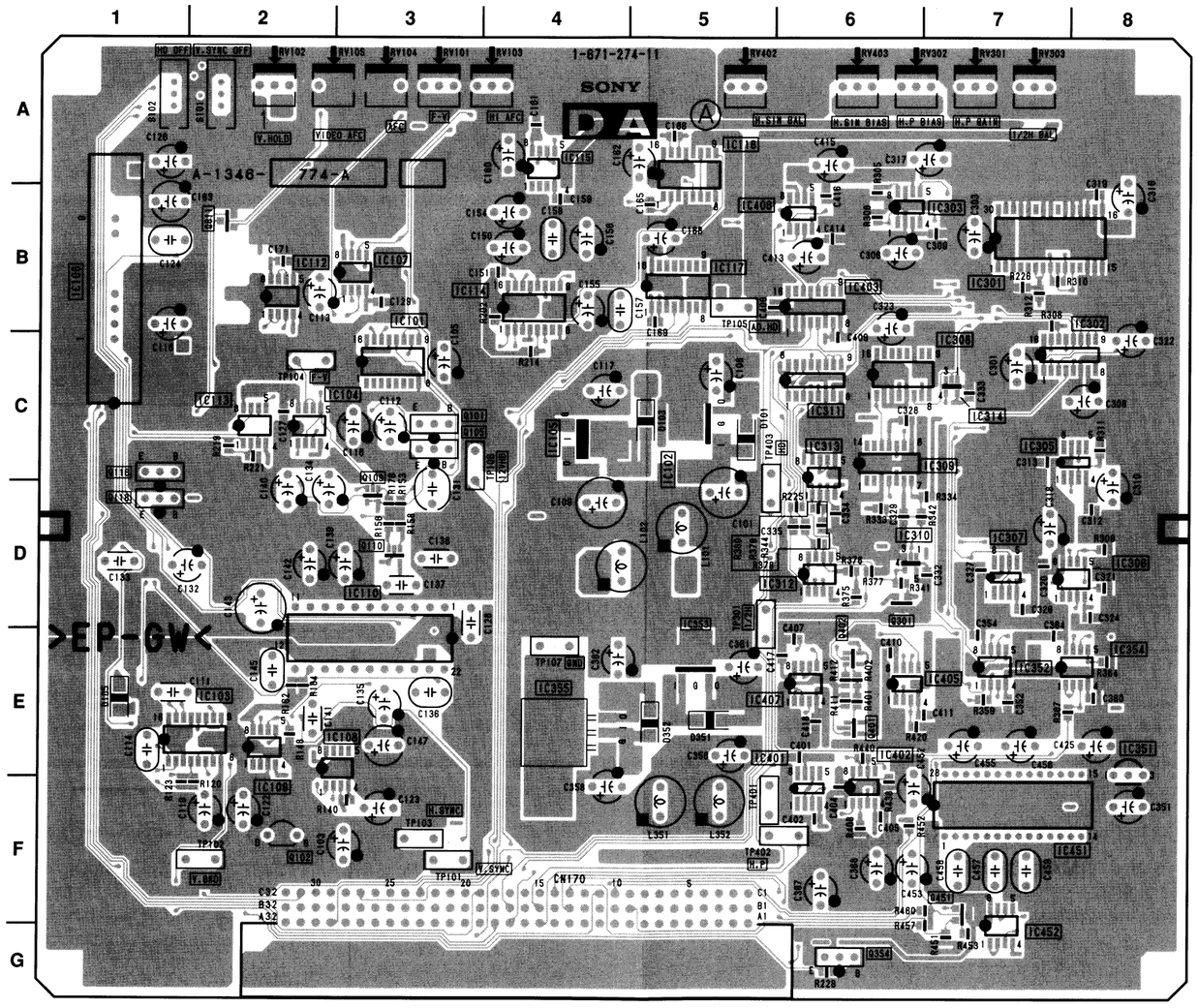

DA -A SIDE-
SUFFIX: -11

DA BOARD

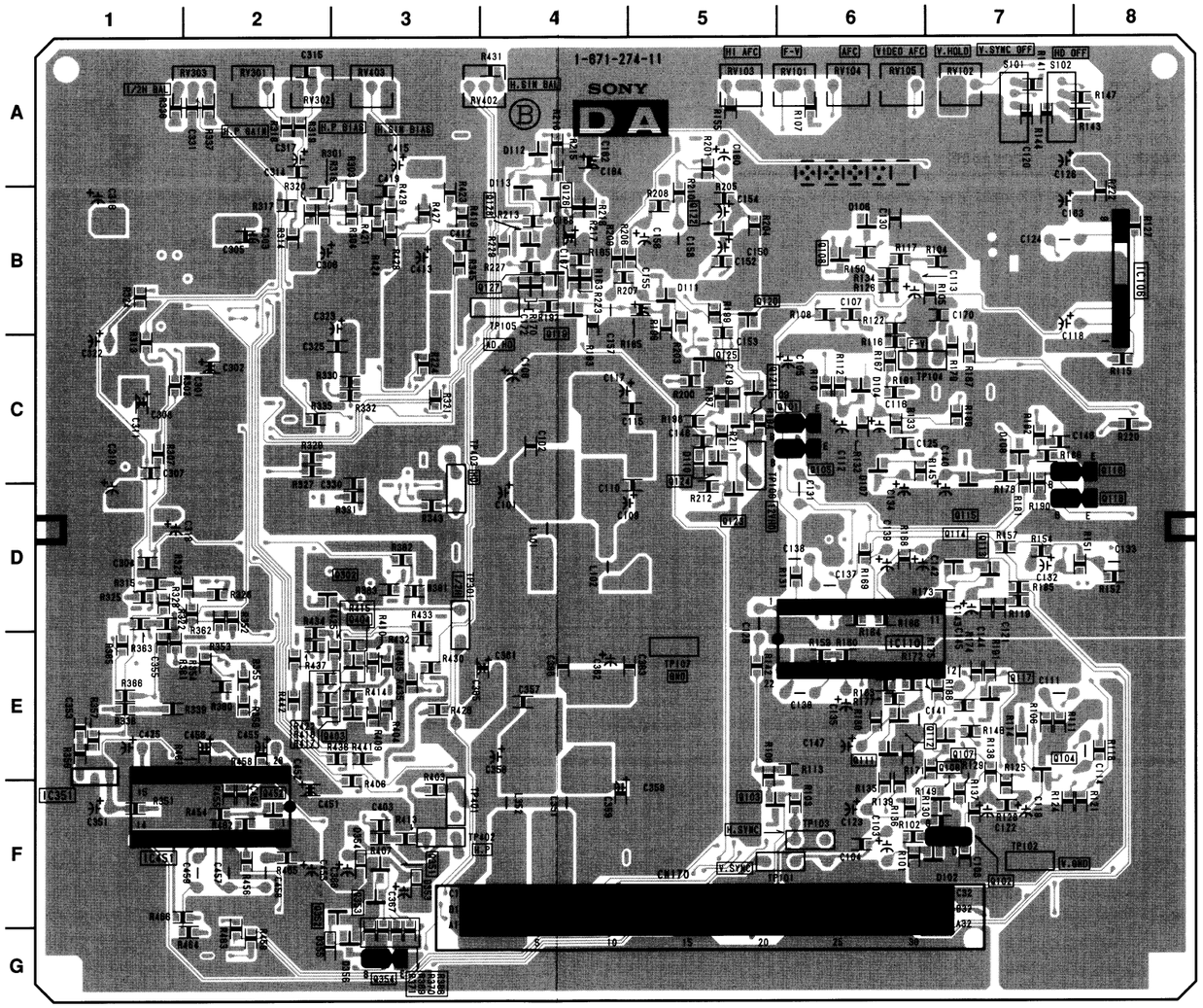

DA -B SIDE-
SUFFIX: -11

DA BOARD (B SIDE)

D102	F-7
D104	C-6
D106	B-6
D107	D-6
D108	C-7
D109	C-5
D110	C-5
D111	B-5
D112	A-4
D113	A-4
D353	F-3
D354	F-3
D355	G-2
D356	G-3
IC106	B-8
IC110	E-6
IC351	F-1
IC451	F-1
Q101	C-6
Q102	F-7
Q103	F-5
Q104	E-7
Q105	C-6
Q106	E-7
Q107	E-7
Q108	B-6
Q111	E-6
Q112	E-7
Q113	D-7
Q114	D-7
Q115	D-7
Q116	C-8
Q117	E-7
Q118	D-8
Q119	B-4
Q120	B-5
Q121	C-5
Q122	B-5
Q123	D-5
Q124	C-5
Q125	C-5
Q126	B-4
Q127	B-4
Q128	B-4
Q302	D-3
Q351	F-3
Q352	F-2
Q353	F-3
Q354	G-3
Q403	E-3
Q404	D-3
Q452	F-2
RV101	A-6
RV102	A-7
RV103	A-5
RV104	A-6
RV105	A-6
RV301	A-2
RV302	A-2
RV303	A-2
RV402	A-4
RV403	A-3
TP101	F-6
TP102	F-7
TP103	F-6
TP104	C-7
TP105	B-4
TP106	D-5
TP107	E-5
TP301	D-3
TP401	F-3
TP402	F-4
TP403	C-3

DA BOARD WAVEFORMS

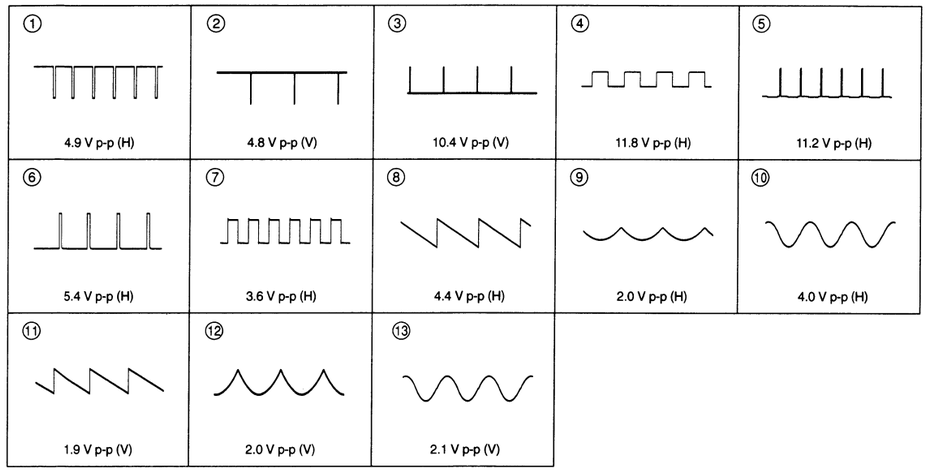

DA BORAD FUNCTIONS

REF	TYPE NAME	FUNCTION
IC101	HD14538BFP	PULSE GENERATOR
IC102	BA12FP-E2	+12VREG-1
IC103	HD14538BFP	VD GENERATOR
IC104	UPC814G2	HF AFC AMP
IC105	NJM79M12DLA	-12VREG-1
IC106	MC-8639A	H SHIFT
IC107	UPC814G2	HI AFC BUFFER
IC108	UPC393G2	VAFC-2
IC109	UPC814G2	VAFC-1
IC110	UPC1377C	AFC
IC112	UPC814G2	F-V BUFFER
IC113	UPC814G2	VIDEO AFC BUFFER
IC114	HD14538BFP	AD HD GEN-1
IC115	UPC4558G2	AD COMPARATOR
IC116	HD14538BFP	AD HD GEN-2
IC117	TC74HC4538	HD WIDTH GEN
IC301	CXA1726AM	H PARA GEN-2
IC302	PC74HC4053D-T	H SAW SW-2
IC303	AD835AR	H PARA GEN-1
IC305	LM6361M	H SAW GEN-1
IC306	UPC814G2	H SAW GEN-2
IC307	LM6361M	H SAW BUFFER
IC308	SN74HC109	H SAW SW-1
IC309	UPC319G2	H SAW COMPARATOR
IC310	TC7S04F	1/2H BUFFER
IC311	PC74HC4053D-T	H RT CONT SW
IC312	UPC814G2	H RT BUFFER
IC313	UPC814G2	H SIN GEN-2
IC314	TC7S08F	H RT BUFFER
IC351	TL431CLP	VOLTAGE REF
IC352	UPC814G2	H SIZE BUFFER-1
IC353	BA05FP-E2	5V REG
IC354	UPC814G2	H SIZE BUFFER-2
IC355	LM2990SX	-5 REG
IC401	LM6361M	H SAW BUFFER
IC402	AD828AR	H PARA BUFFER
IC403	PC74HC4053D-T	H SIN SW
IC405	AD828AR	H SIG1GEN-1
IC406	AD835AR	H SIN GEN
IC407	UPC814G2	H SIG1GEN-2
IC451	CXA1470AS	V SIG GEN
IC452	UPC814G2	V SAW/PARA BUFFER
Q101	DTC144ESA	SW-2
Q102	2SK523	V SINC INVERTER
Q103	2SC2712	H SYNC BUFFER
Q104	2SC2712	V SYNC BUFFER
Q105	DTC144ESA	SW-1
Q106	2SC2712	V AFC SW
Q107	2SC2712	V AFC AMP
Q108	2SC2712	V-I CONVERTER-3
Q109	FMW5	V-I CONVERTER-4
Q110	FMS2	CURRENT MIRROR
Q111	2SC2712	V AMP-2
Q112	2SC2712	V AMP-2
Q113	2SC2712	H OSC BUFFER-1
Q114	2SA1162	H OSC BUFFER-2

REF	TYPE NAME	FUNCTION
Q115	2SA1162	VIDEO AFC
Q116	DTC144ESA	SW-3
Q117	2SC2712	VD BUFFER
Q118	DTC144ESA	1/2H BUFFER
Q119	2SC2712	AD HD BUFFER
Q120	2SC2712	HD BUFFER-1
Q121	2SA1162	HD BUFFER-2
Q122	2SA1162	V-I CONVERTER-1
Q123	2SC2712	HD BUFFER-3
Q124	2SA1162	HD BUFFER-4
Q125	2SC2712	1/2H BUFFER
Q126	2SC2712	H RT BUFFER
Q127	2SA1162	HD WIDTH SW-1
Q128	DTC144EKA	HD WIDTH SW-2
Q301	2SC2712	1/2H BUFFER-1
Q302	2SA1162	1/2H BUFFER-2
Q351	2SC2712	-12VPROT
Q352	2SA1162	+12VPROT
Q353	2SC2712	-5VPROT
Q354	DTC144ESA	+5VPROT
Q401	FMW5	H SIG1 SW-1
Q402	FMS1A	H SIG1 SW-2
Q403	2SA1162	H SIG1 BUFFER-1
Q404	2SC2712	H SIG1 BUFFER-2
Q451	2SC2712	1/2V BUFFER
Q452	2SC2712	V TR BUFFER
Q811	DTC144EKA	FH SW BUFFER
D101	1SR154-400TE-25	REG PROTECTOR-1
D102	1S2837	V SYNC CLAMP
D103	1SR154-400TE-25	REG PROTECTOR-2
D104	1S2837	SPEED UP-2
D105	1SR154-400TE-25	H OUT PROTECTOR
D106	1S2837	LIMITER-1
D107	1S2837	SPEED UP-3
D108	1SS123	LEVEL SHIFT-1
D109	1S2837	SPEED UP-1
D110	UDZ12B	LIMITER-3
D111	1S2837	AD HD SW
D112	1S2837	LIMITER-2
D113	1S2837	SPEED UP-4
D351	1SR154-400TE-25	REG PROTECTOR-3
D352	1SR154-400TE-25	REG PROTECTOR-4
D353	UDZ10B	LIMITER-4
D354	UDZ3.6B	LIMITER-5
D355	UDZ5.6B	LIMITER-6
D356	1S2837	LEVEL SHIFT-2

10-66

DA (1/2) BOARD

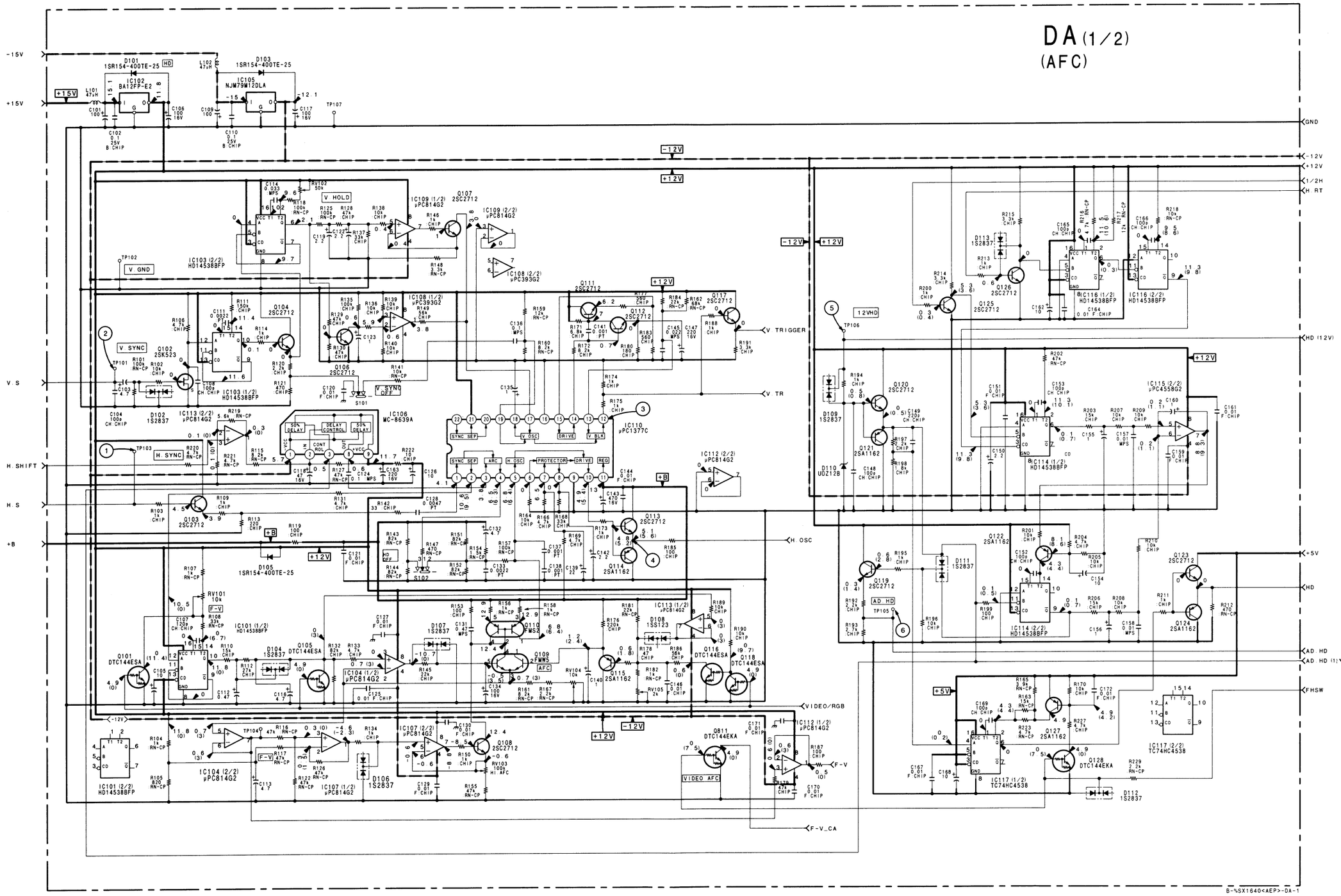
DA (1/2)
(AFC)
-15V
+15V
V.S
H.SHIFT
H.S
+B
GND
-12V
+12V
1/2H
H RT
HD (12V)
+5V
HD
AD.HD
AD.HD (1)(V)
FHSW
V TRIGGER
V.TR
H.OSC
VIDEO/RGB
F-V
F-V_CA
V HOLD
V GND
V SYNC
H SYNC
12VHD
AD HD
V SYNC OFF
HD OFF
VIDEO AFC
AFC
IC101 (1/2) HD14538BFP
IC101 (2/2) HD14538BFP
IC102 BA12FP-E2
IC103 (1/2) HD14538BFP
IC103 (2/2) HD14538BFP
IC104 (1/2) μPC814G2
IC104 (2/2) μPC814G2
IC105 NJM79M12DLA
IC106 MC-8639A
IC107 (1/2) μPC814G2
IC107 (2/2) μPC814G2
IC108 (1/2) μPC393G2
IC108 (2/2) μPC393G2
IC109 (1/2) μPC814G2
IC109 (2/2) μPC814G2
IC110 μPC1377C
IC112 (1/2) μPC814G2
IC112 (2/2) μPC814G2
IC113 (1/2) μPC814G2
IC113 (2/2) μPC814G2
IC114 (1/2) HD14538BFP
IC114 (2/2) HD14538BFP
IC115 (2/2) μPC4558G2
IC116 (1/2) HD14538BFP
IC116 (2/2) HD14538BFP
IC117 (1/2) TC74HC4538
IC117 (2/2) TC74HC4538
D101 1SR154-400TE-25
D103 1SR154-400TE-25
D105 1SR154-400TE-25
B-%SX1640<AEP>-DA-1

DA BOARD (1/2) IC110
UPC1377C

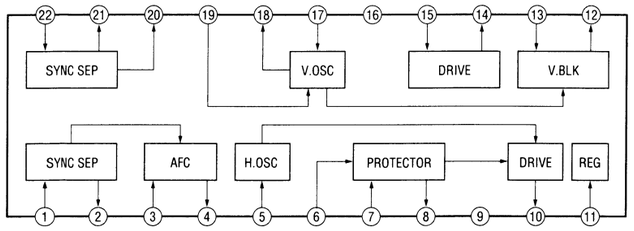

DA BOARD (1/2) IC106
MC-8369A

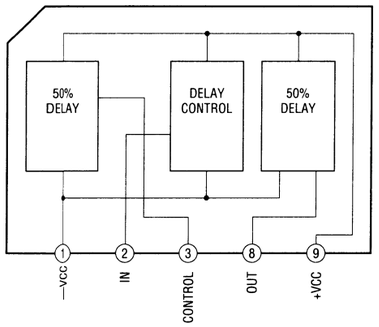

DA BOARD (2/3) IC301
CXA1726AM

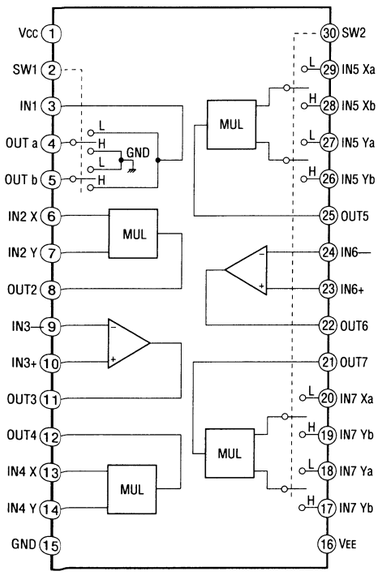

DA BOARD (2/3) IC451
CXA1470AS

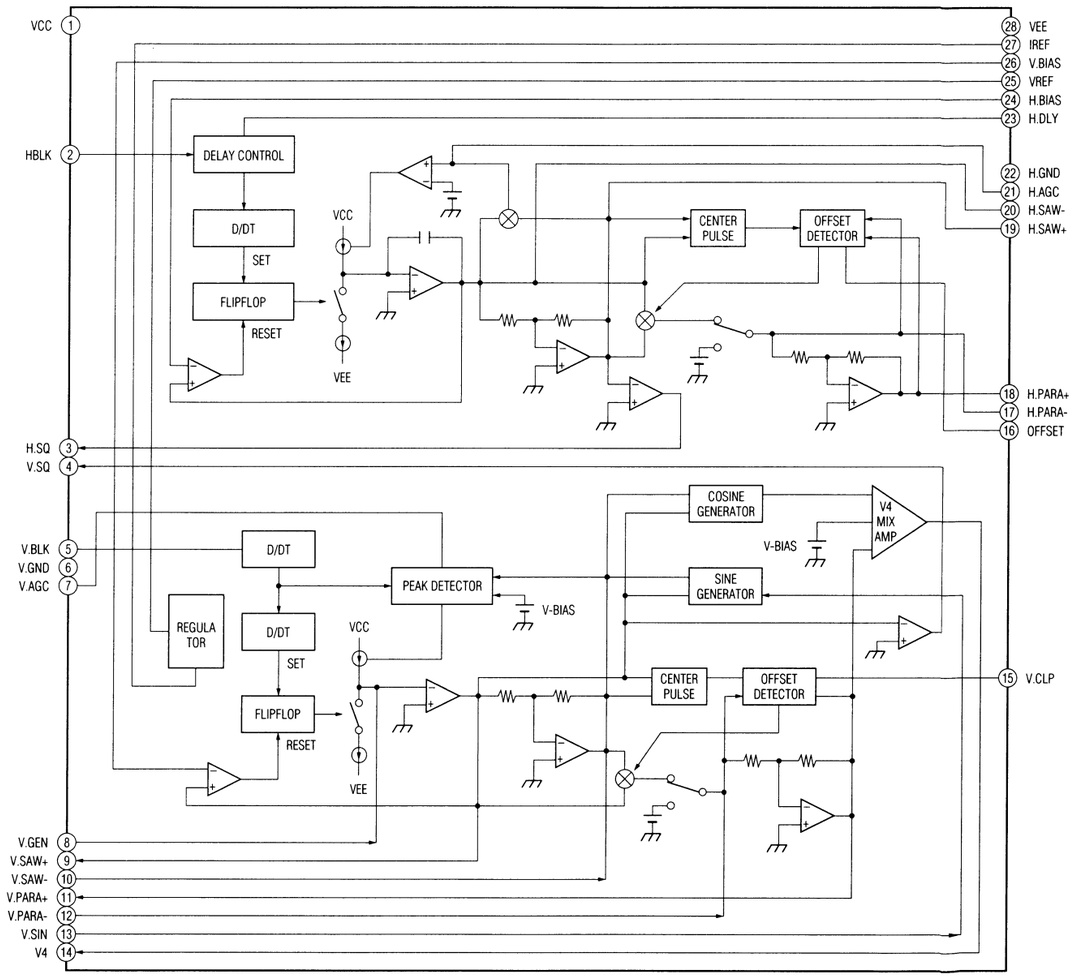

DA BOARD (2/3) IC303, 406
AD835AR

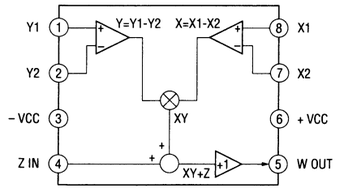

DA (2/2)

DA (2/2) BOARD

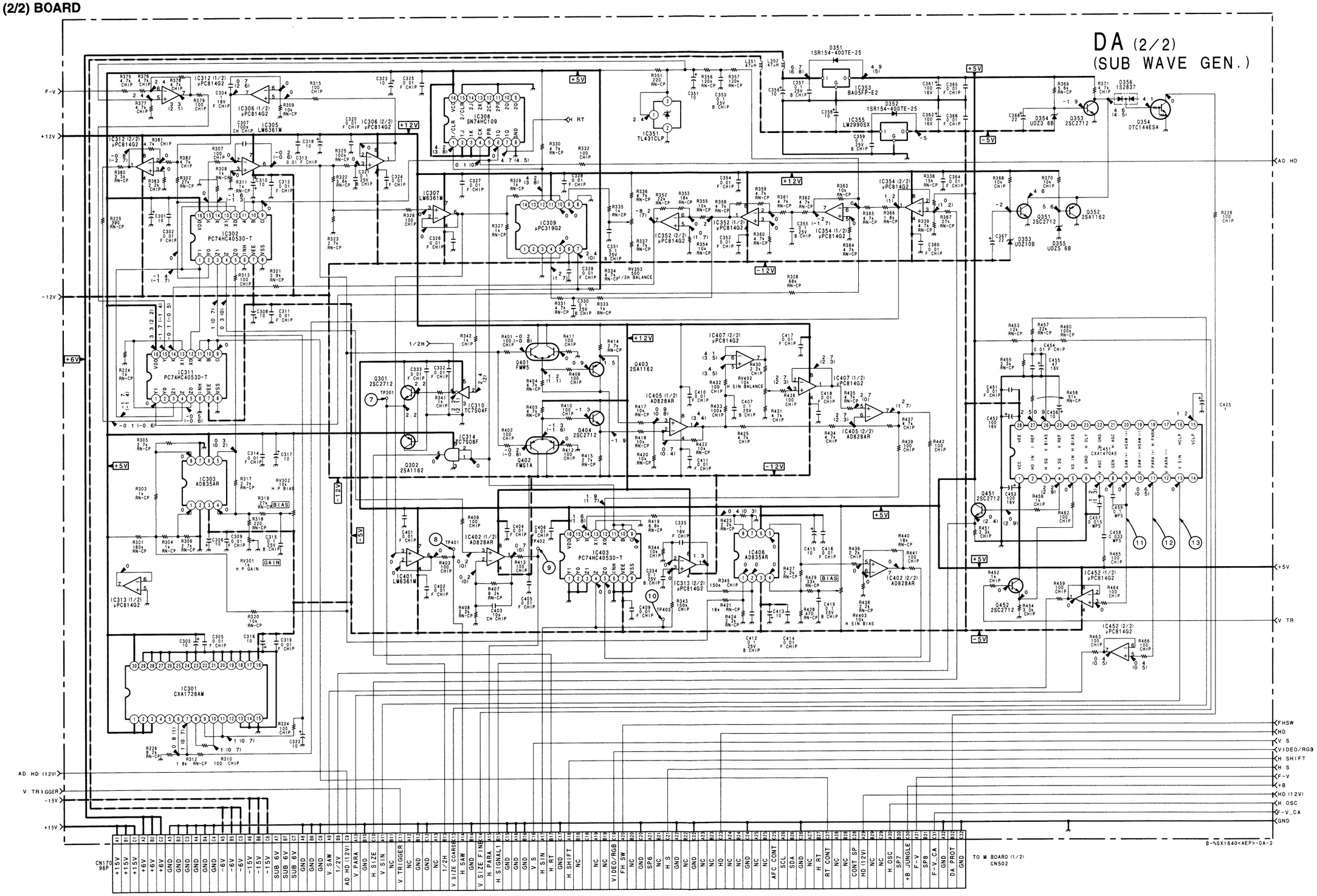

DB BOARD (A SIDE)

D601	H-5	RV702	E-4
D602	H-6	RV703	E-6
D605	D-3	RV704	F-4
D901	A-2		
D902	A-2	TP101	G-4
		TP201	G-4
IC101	G-3	TP301	F-4
IC102	F-5	TP401	F-4
IC201	H-4	TP501	C-5
IC202	G-5	TP502	C-5
IC203	G-4	TP601	D-4
IC301	F-3	TP602	D-4
IC302	E-5	TP603	H-5
IC401	F-3	TP701	E-4
IC402	F-5	TP702	E-4
IC403	F-4		
IC501	C-5		
IC503	C-5		
IC601	D-5		
IC602	D-4		
IC603	C-4		
IC604	C-5		
IC606	C-3		
IC607	D-3		
IC608	C-2		
IC609	C-4		
IC610	C-3		
IC612	H-5		
IC613	H-6		
IC614	D-2		
IC701	D-5		
IC702	E-4		
IC703	E-5		
IC901	B-6		
IC902	B-5		
IC903	B-6		
IC904	A-6		
IC905	A-4		
IC906	A-5		
IC907	B-5		
IC908	A-3		
IC909	A-2		
IC910	B-2		
IC911	A-4		
IC912	B-4		
IC913	A-6		
Q103	G-2		
Q104	G-2		
Q107	G-3		
Q108	G-3		
Q203	H-2		
Q204	G-2		
Q207	H-3		
Q208	G-3		
Q303	F-2		
Q304	F-2		
Q307	F-3		
Q308	F-3		
Q403	F-2		
Q404	F-2		
Q407	F-3		
Q408	F-3		
Q503	D-3		
Q504	D-3		
Q601	D-4		
Q602	D-4		
Q605	D-4		
Q606	C-4		
Q611	D-3		
Q701	E-3		
Q702	E-2		
Q705	E-3		
Q706	E-3		
Q709	B-2		
Q712	C-2		
Q901	A-3		
Q902	B-3		
RV101	G-5		
RV102	G-6		
RV201	G-5		
RV202	G-6		
RV301	F-5		
RV302	E-6		
RV401	F-5		
RV402	F-6		
RV501	B-6		
RV502	B-6		
RV601	D-6		
RV602	D-5		
RV603	C-6		
RV604	C-5		
RV701	D-6		

DB BOARD

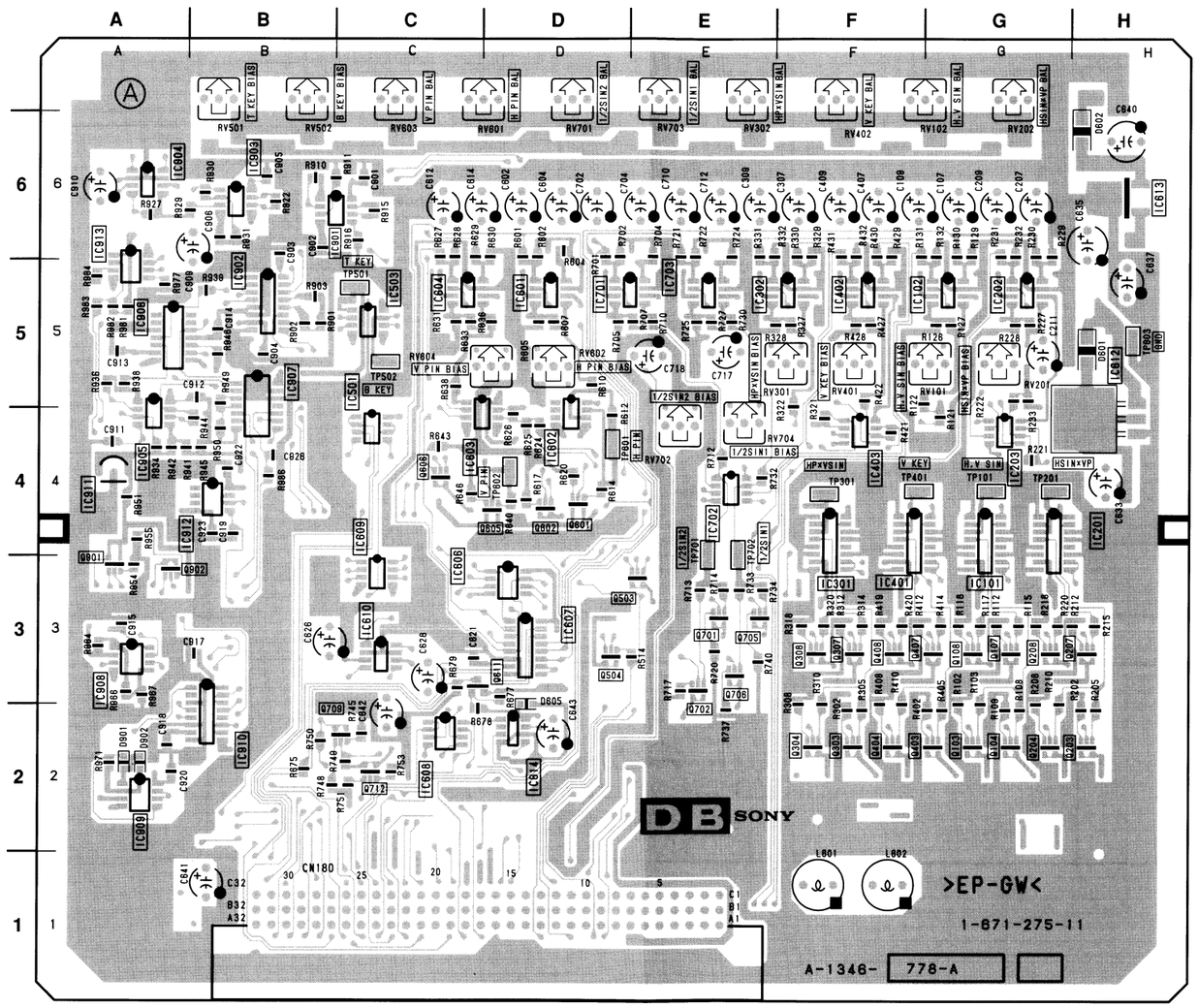

DB -A SIDE-
SUFFIX: -11

DB BOARD

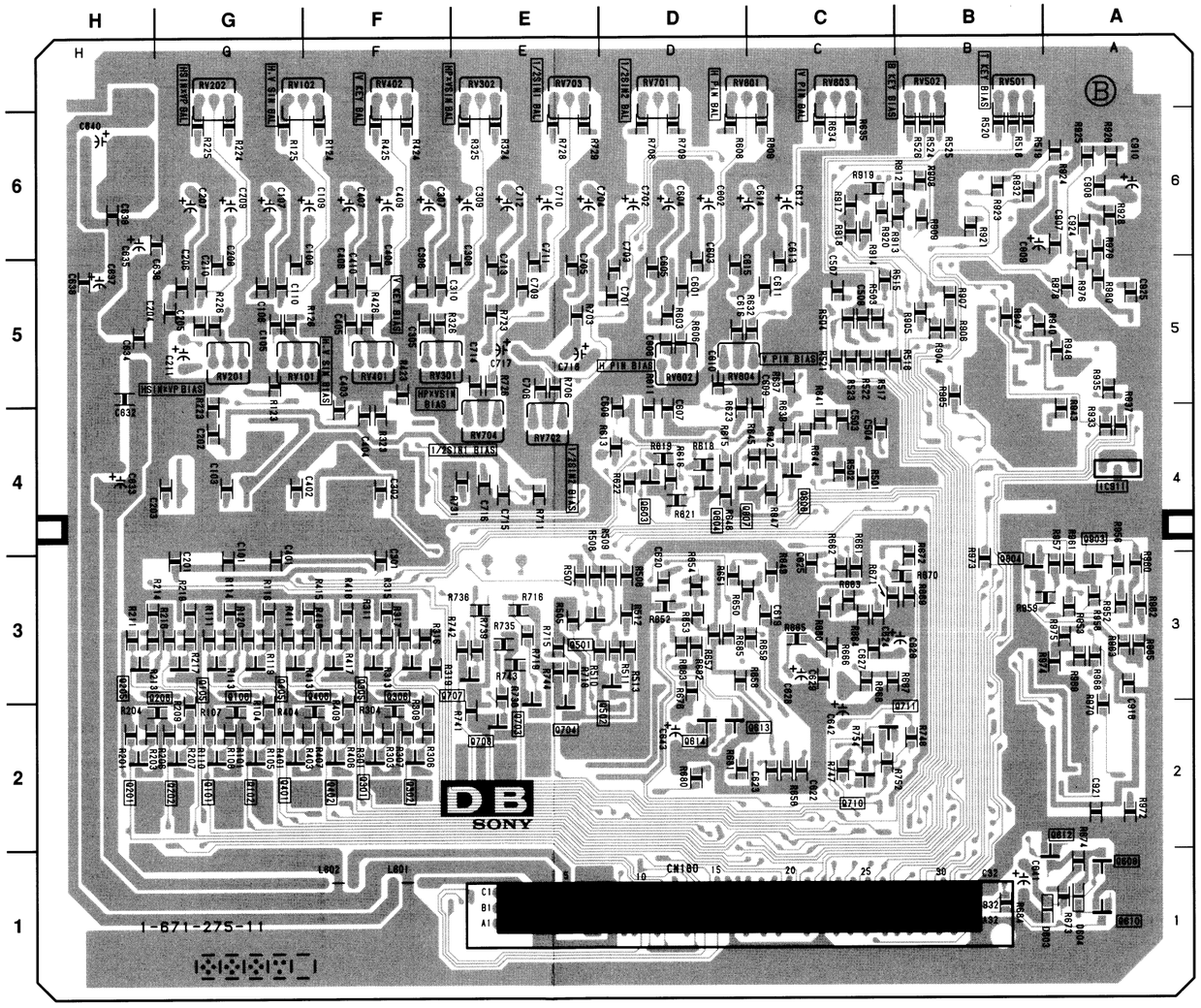

DB -B SIDE-
SUFFIX: -11

DB BOARD (B SIDE)

D604	A-1
D603	A-1
IC911	A-4
Q101	G-2
Q102	G-2
Q105	G-3
Q106	G-3
Q201	H-2
Q202	G-2
Q205	H-3
Q206	G-3
Q301	F-2
Q302	F-2
Q305	F-3
Q306	F-3
Q401	G-2
Q402	F-2
Q405	G-3
Q406	F-3
Q501	E-3
Q502	D-2
Q603	D-4
Q604	D-4
Q607	D-4
Q608	C-4
Q609	A-1
Q610	A-1
Q612	A-2
Q613	C-2
Q614	D-2
Q703	E-2
Q704	E-2
Q707	E-3
Q708	E-2
Q710	C-2
Q711	B-2
Q903	A-4
Q904	B-3
RV101	G-5
RV102	G-7
RV201	G-5
RV202	G-7
RV301	F-5
RV302	E-7
RV401	F-5
RV402	F-7
RV501	B-7
RV502	B-7
RV601	D-7
RV602	D-5
RV603	C-7
RV604	D-5
RV701	D-7
RV702	E-4
RV703	E-7
RV704	E-4

10-71

DB BOARD WAVEFORMS

① 3.1 V p-p (V)	② 3.4 V p-p (V)	③ 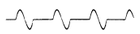 3.2 V p-p (H)	④ 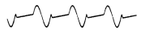 3.5 V p-p (H)	⑤ 3.5 V p-p (V)
⑥ 3.2 V p-p (V)	⑦ 3.6 V p-p (V)	⑧ 3.6 V p-p (V)	⑨ 3.4 V p-p (V)	⑩ 4.5 V p-p (V)

DB BORAD FUNCTIONS

REF	TYPE NAME	FANCTION
IC101	PC74HC4053D-T	REG SW-1
IC102	AD835AR	REG MULTIPLEX-1
IC201	PC74HC4053D-T	REG SW-2
IC202	AD835AR	REG MULTIPLEX-2
IC203	AD828AR	REG BUFFER-1
IC301	PC74HC4053D-T	REG SW-3
IC302	AD835AR	REG MULTIPLEX-3
IC401	PC74HC4053D-T	REG SW-4
IC402	AD835AR	REG MULTIPLEX-4
IC403	AD828AR	REG BUFFER-2
IC501	AD826AR	KEY BUFFER
IC503	AD828AR	KEY ADDER
IC601	AD835AR	REG MULTIPLEX-5
IC602	AD828AR	REG BUFFER-3
IC603	AD828AR	REG BUFFER-4
IC604	AD835AR	REG MULTIPLEX-6
IC606	UPC814G2	INVERTER-1
IC607	PC74HC4053D-T	REG INVERT SW
IC608	UPC814G2	INVERTER-2
IC609	AD828AR	INVERTER-3
IC612	LM2990SX	-5V REG
IC613	BA05FP	+5V REG
IC614	TC7W04F	INVERT SW BUFFER
IC701	AD835AR	REG MULTIPLEX-7
IC702	AD828AR	REG BUFFER-5
IC703	AD835AR	REG MULTIPLEX-8
IC901	AD828AR	INVERTER-4
IC902	PC74HC4053D-T	REG SW-5
IC903	AD828AR	REG BUFFER-6
IC904	AD835AR	REG MULTIPLEX-9
IC905	AD828AR	C.BLK ADDER
IC906	UPC319G2	C.BLK COMPARATOR
IC907	SN74HC32ANS	C.BLK OR
IC908	UPC4558G2	C.BLK GEN-1
IC909	UPC814G2	C.BLK GEN-2
IC910	PC74HC4053D-T	SAMPLE.HOLD SW
IC911	TL431CLP-Z	VOLTAGE REF
IC912	UPC814G2	SAMPLE.HOLD.BUFFER
IC913	UPC814G2	REG GEN
Q101	2SA1162	ZONE 20 BUFFER
Q102	2SC2712	ZONE 21 BUFFER
Q103	FMS1A	ZONE 21 SW
Q104	FMW5	ZONE 20 SW
Q105	2SA1162	ZONE 19 BUFFER
Q106	2SC2712	ZONE 18 BUFFER
Q107	FMW5	ZONE 19 SW
Q108	FMS1A	ZONE 18 SW
Q201	2SA1162	ZONE 14 BUFFER
Q202	2SC2712	ZONE 12 BUFFER
Q203	FMW5	ZONE 14 SW
Q204	FMS1A	ZONE 12 SW
Q205	2SA1162	ZONE 15 BUFFER
Q206	2SC2712	ZONE 13 BUFFER
Q207	FMW5	ZONE 15 SW
Q208	FMS1A	ZONE 13 SW
Q301	2SA1162	ZONE 17 BUFFER
Q302	2SC2712	ZONE 16 BUFFER
Q303	FMW5	ZONE 17 SW
Q304	FMS1A	ZONE 16 SW
Q305	2SA1162	ZONE 11 BUFFER
Q306	2SC2712	ZONE 10 BUFFER
Q307	FMW5	ZONE 11 SW
Q308	FMS1A	ZONE 10 SW
Q401	2SA1162	ZONE 8 BUFFER
Q402	2SC2712	ZONE 9 BUFFER
Q403	FMW5	ZONE 8 SW
Q404	FMS1A	ZONE 9 SW
Q405	2SA1162	ZONE 7 BUFFER
Q406	2SC2712	ZONE 6 BUFFER

REF	TYPE NAME	FANCTION
Q407	FMW5	ZONE 7 SW
Q408	FMS1A	ZONE 6 SW
Q501	2SA1162	SIT T BUFFER
Q502	2SC2712	SIN B BUFFER
Q503	FMW5	SIN T SW
Q504	FMS1A	SIN B SW
Q601	FMW5	PIN R SW
Q602	FMS1A	PIN L SW
Q603	2SA1162	PIN R BUFFER
Q604	2SC2712	PIN L BUFFER
Q605	FMW5	PIN B SW
Q606	FMS1A	PIN T SW
Q607	2SA1162	PIN B BUFFER
Q608	2SC2712	PIN T BUFFER
Q609	2SC2712	-5V PROT-1
Q610	DTC144EKA	-5V PROT-2
Q611	2SA1162	5V PROT-1
Q612	DTC144EKA	5V PROT-2
Q613	DTC144EKA	INV SW BUFFER-1
Q614	DTC144EKA	INV SW BUFFER-2
Q701	FMW5	ZONE 24 SW
Q702	FMS1A	ZONE 25 SW
Q703	2SA1162	ZONE 24 BUFFER
Q704	2SC2712	ZONE 25 BUFFER
Q705	FMW5	ZONE 22 SW
Q706	FMS1A	ZONE 23 SW
Q707	2SA1162	ZONE 22 BUFFER
Q708	2SC2712	ZONE 23 BUFFER
Q709	FMW5	SIN L SW
Q710	2SA1162	SIN L BUFFER
Q711	2SC2712	SIN R BUFFER
Q712	FMS1A	SIN R SW
Q901	FMW5	V SAW 1 SW
Q902	FMS1A	V SAW 2 SW
Q903	2SA1162	V SAW 1 BUFFER
Q904	2SC2712	V SAW 2 BUFFER
D601	1SR154-400TE-25	REG PROTECTOR-1
D602	1SR154-400TE-25	REG PROTECTOR-2
D603	UDZ3.6B	LIMITER-1
D604	MA111	LIMITER-2
D605	UDZ5.1B	LIMITER-3
D901	MA111	V SAW RECT-1
D902	MA111	V SAW RECT-2

DB BOARD (1/2) IC601, 604, 701, 703
DB BOARD (2/2) IC102, 202, 302, 402
AD835AR

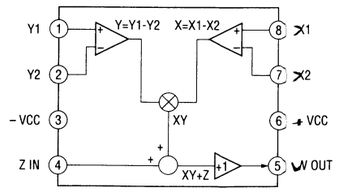

DB (1/2) BOARD

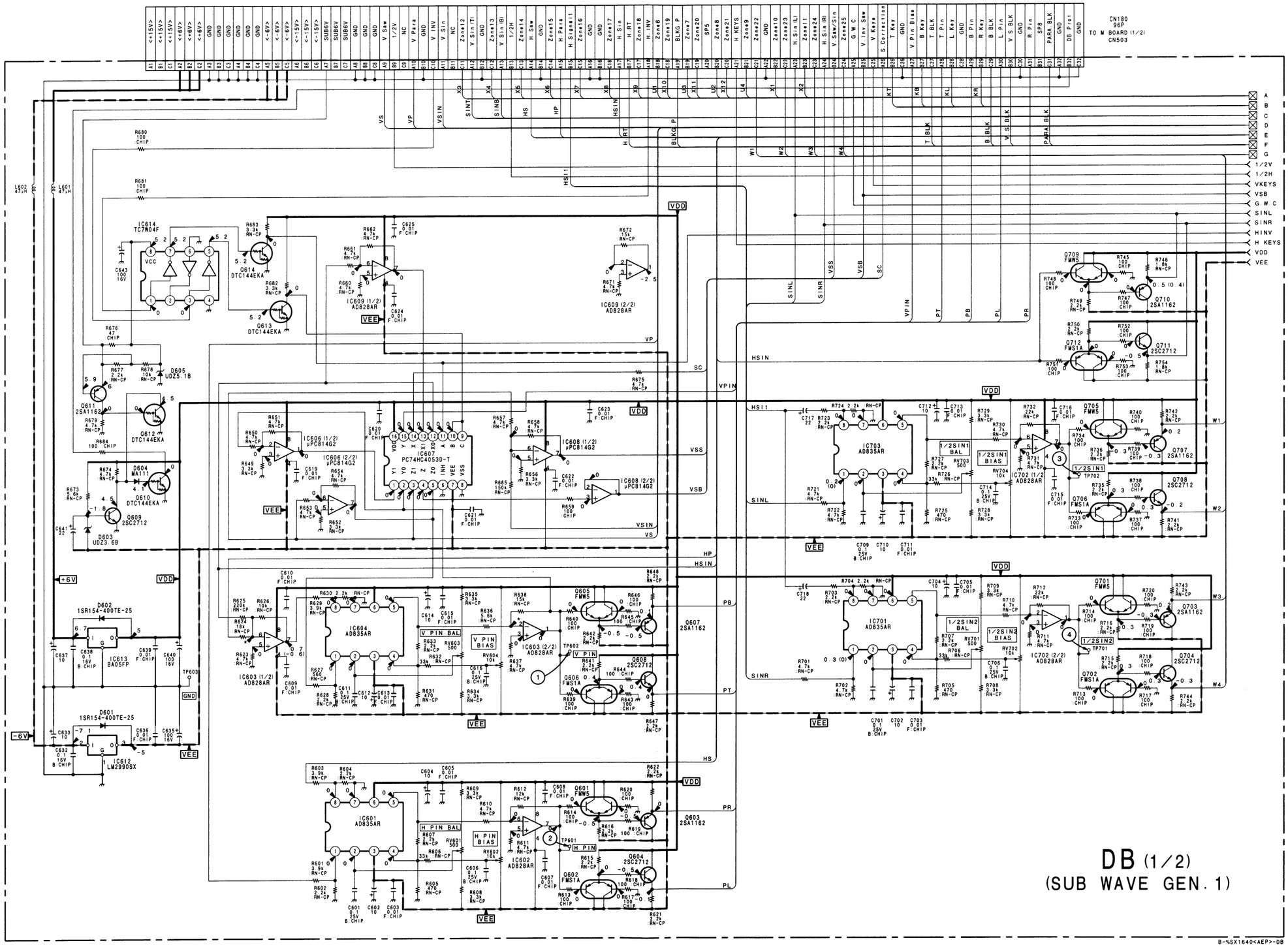

DB (1/2)
(SUB WAVE GEN. 1)

DB (2/2) BOARD

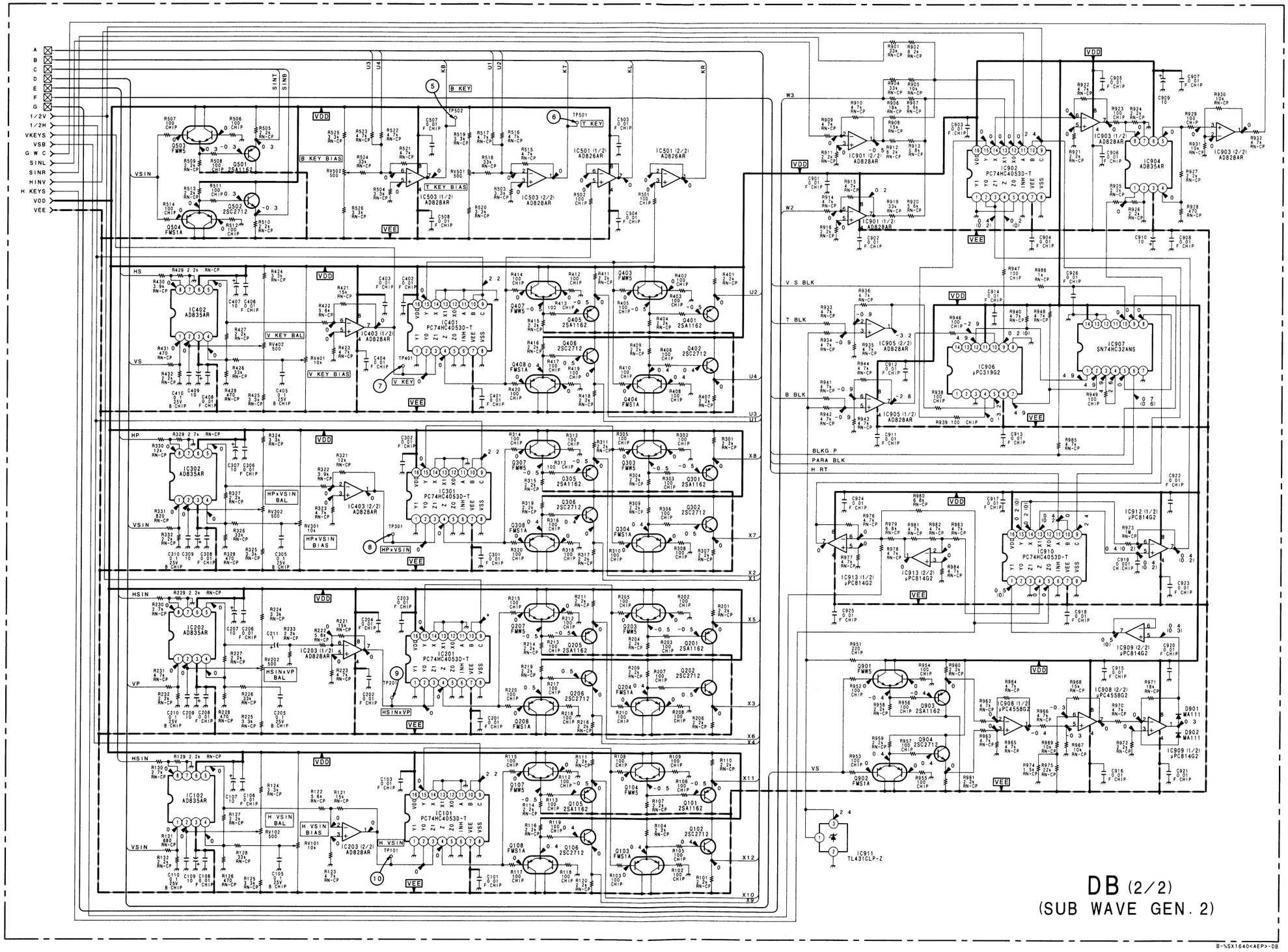

DC BOARD

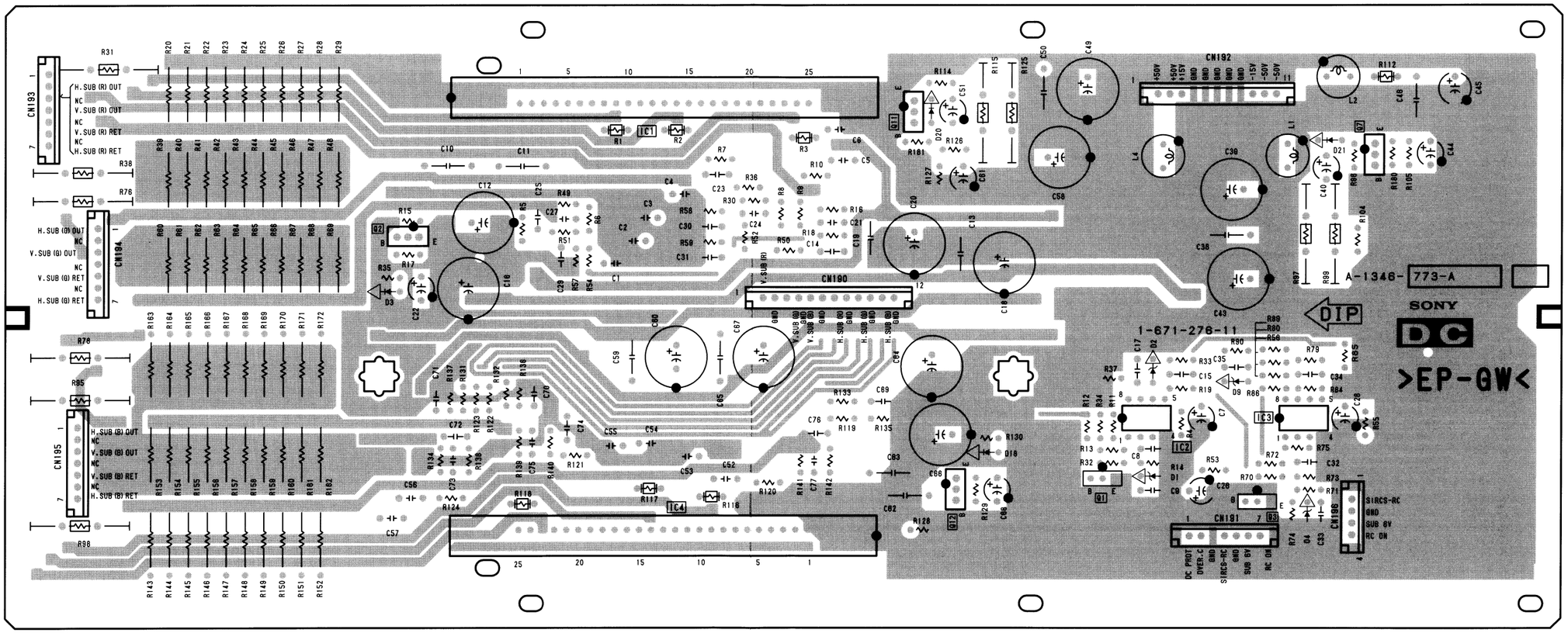

DC -A SIDE-
SUFFIX: -11

DC BOARD

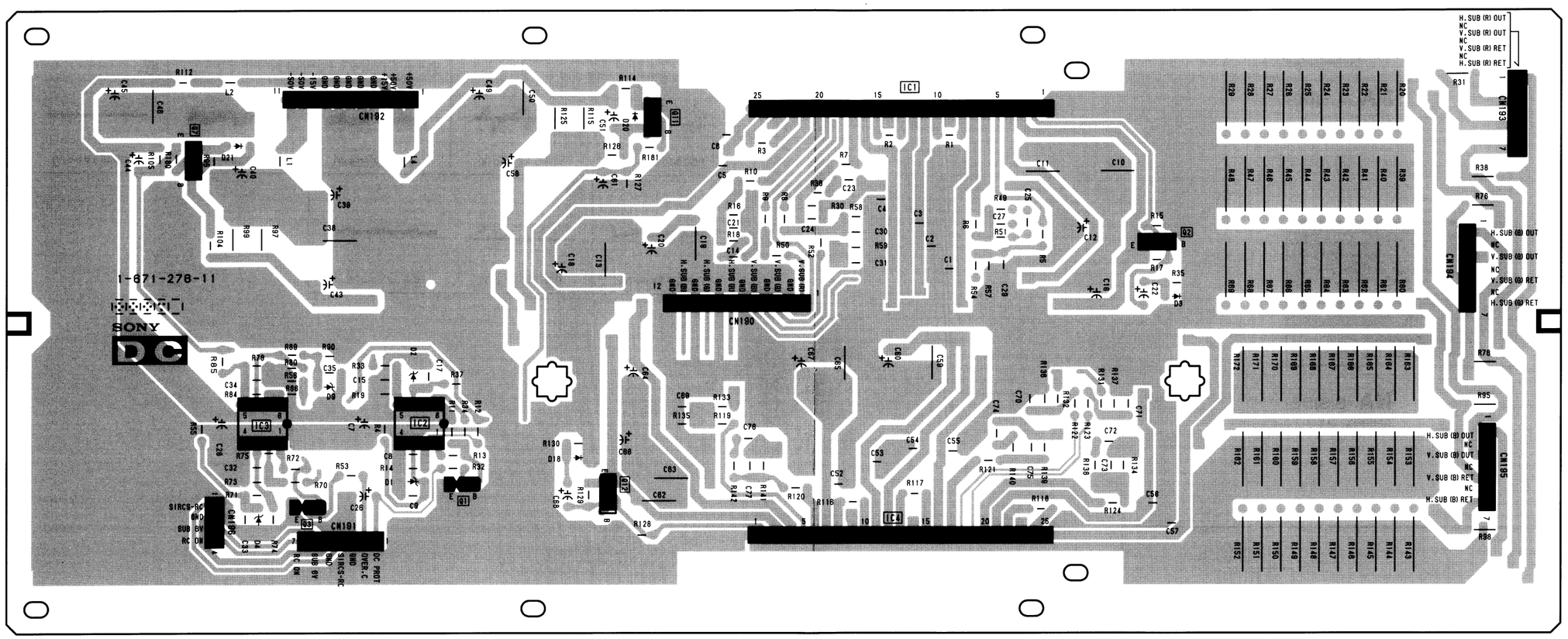

DC -B SIDE-
SUFFIX: -11

NA BOARD

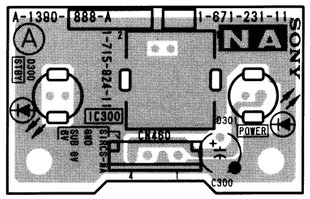

NA -A SIDE-
SUFFIX: -11

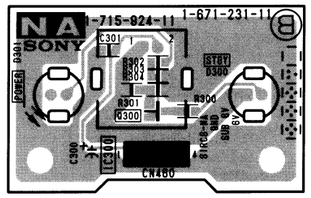

NA -B SIDE-
SUFFIX: -11

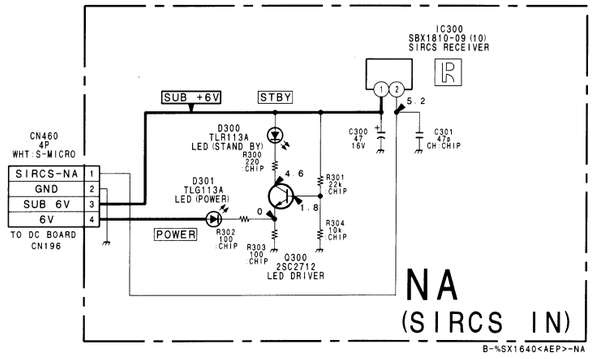

DC BOARD WAVEFORMS

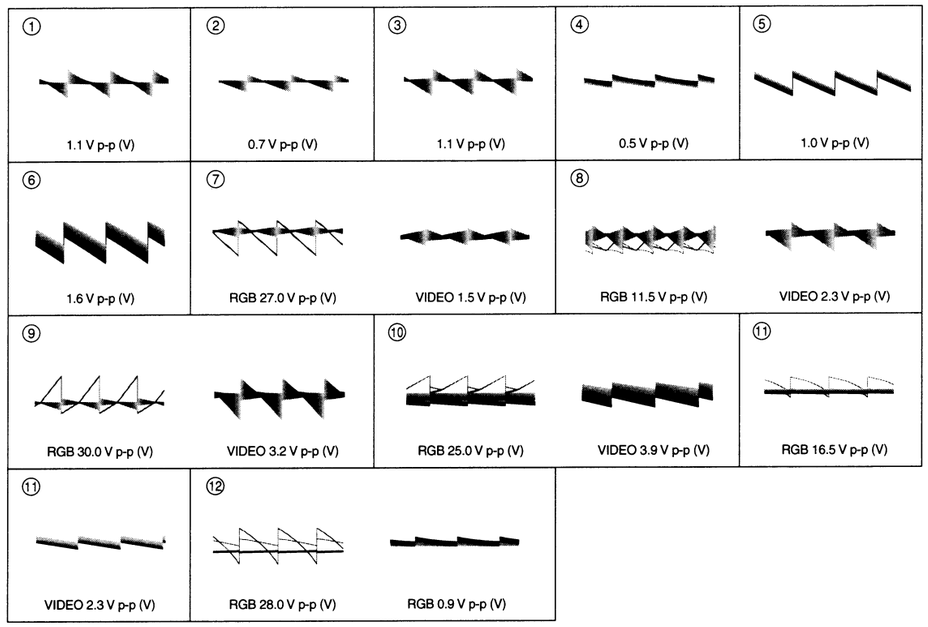

DC BOARD

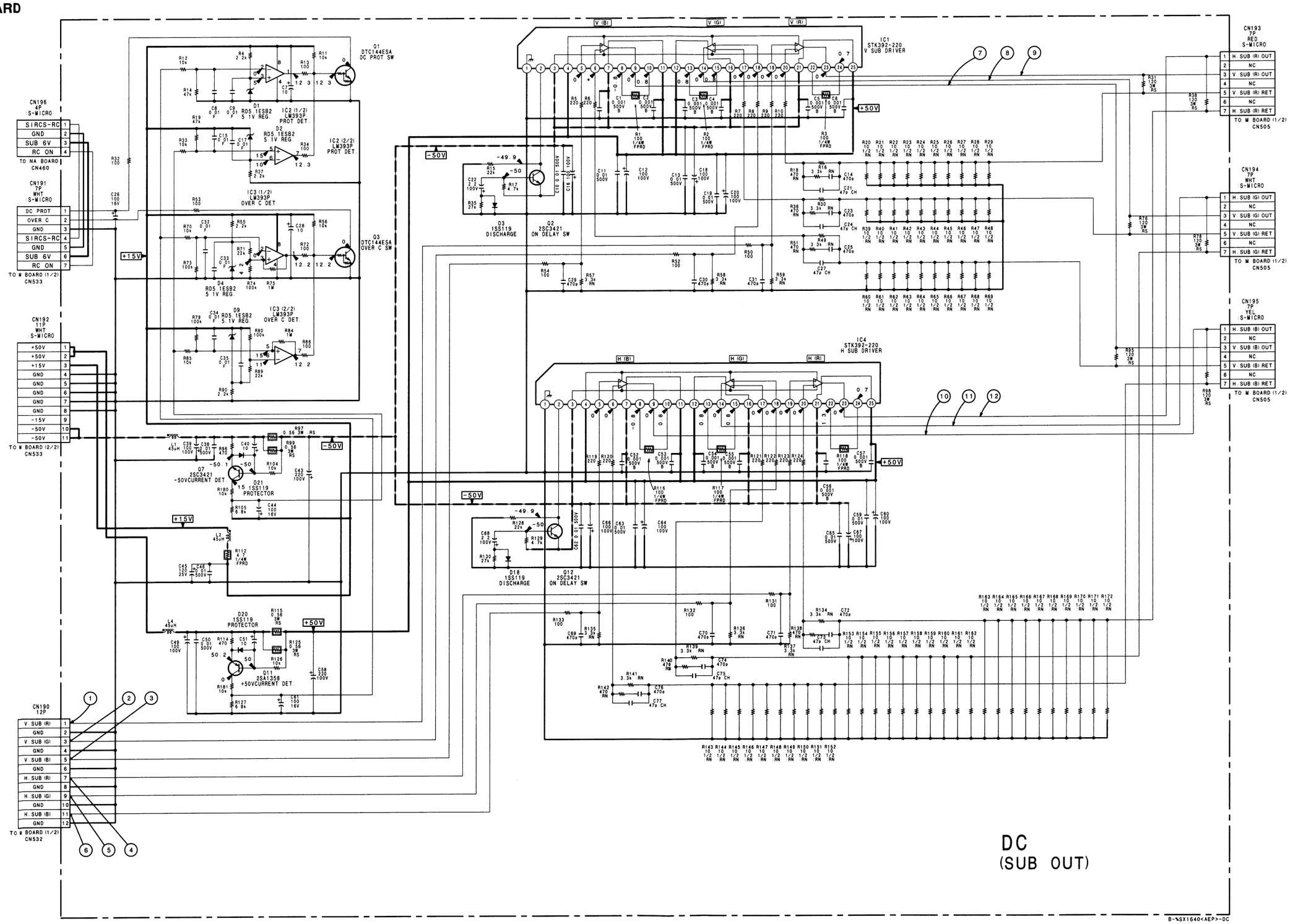
CN196
4P
:S-MICRO
SIRCS-RC
GND
SUB 6V
RC ON
TO NA BOARD
CN460
CN191
7P
WHT
:S-MICRO
DC PROT
OVER C
GND
SIRCS-RC
GND
SUB 6V
RC ON
TO M BOARD (1/2)
CN533
CN192
11P
WHT
S-MICRO
+50V
+50V
+15V
GND
GND
GND
GND
-15V
-50V
-50V
TO M BOARD (2/2)
CN533
CN190
12P
V SUB (R)
GND
V SUB (G)
GND
V SUB (B)
GND
H SUB (R)
GND
H SUB (G)
GND
H SUB (B)
GND
TO W BOARD (1/2)
CN532
Q1
DTC144ESA
DC PROT SW
IC2 (1/2)
LM393P
PROT DET
IC2 (2/2)
LM393P
PROT DET
IC3 (1/2)
LM393P
OVER C DET
Q3
DTC144ESA
OVER C SW
IC3 (2/2)
LM393P
OVER C DET
Q7
2SC3421
-50VCURRENT DET
D21
1SS119
PROTECTOR
D20
1SS119
PROTECTOR
Q11
2SA1358
+50VCURRENT DET
D3
1SS119
DISCHARGE
Q2
2SC3421
ON DELAY SW
D18
1SS119
DISCHARGE
Q12
2SC3421
ON DELAY SW
IC1
STK392-220
V SUB DRIVER
IC4
STK392-220
H SUB DRIVER
CN193
7P
RED
S-MICRO
H SUB (R) OUT
NC
V SUB (R) OUT
NC
V SUB (R) RET
NC
H SUB (R) RET
TO M BOARD (1/2)
CN505
CN194
7P
WHT
:S-MICRO
H SUB (G) OUT
NC
V SUB (G) OUT
NC
V SUB (G) RET
NC
H SUB (G) RET
TO M BOARD (1/2)
CN505
CN195
7P
YEL
:S-MICRO
H SUB (B) OUT
NC
V SUB (B) OUT
NC
V SUB (B) RET
NC
H SUB (B) RET
TO M BOARD (1/2)
CN505
DC
(SUB OUT)
B-%SX1640<AEP>-DC

DD BOARD (A SIDE)

D101 G-6
D102 G-4
D105 A-4
D106 A-4
D301 A-5
D302 A-5

IC101 E-2
IC102 E-2
IC103 D-2
IC104 C-2
IC105 C-2
IC106 B-2
IC107 E-3
IC108 E-3
IC109 D-3
IC110 C-3
IC111 B-3
IC112 B-3
IC113 A-2
IC114 H-6
IC115 H-5
IC116 A-4
IC117 A-3
IC118 D-2
IC301 B-6
IC302 B-6
IC303 C-6
IC304 D-6
IC305 E-6
IC306 E-6
IC307 B-5
IC308 B-5
IC309 C-5
IC310 D-5
IC311 E-5
IC312 E-5
IC313 H-2
IC314 H-2
IC315 H-3
IC316 H-3
IC317 H-4
IC322 A-5
IC323 A-3
IC450 B-4
IC451 B-4
IC452 C-4
IC453 D-4
IC454 E-4
IC455 E-4

RV301 G-6
RV302 G-6
RV303 G-6
RV304 G-5
RV305 G-5
RV306 G-4

DD BOARD

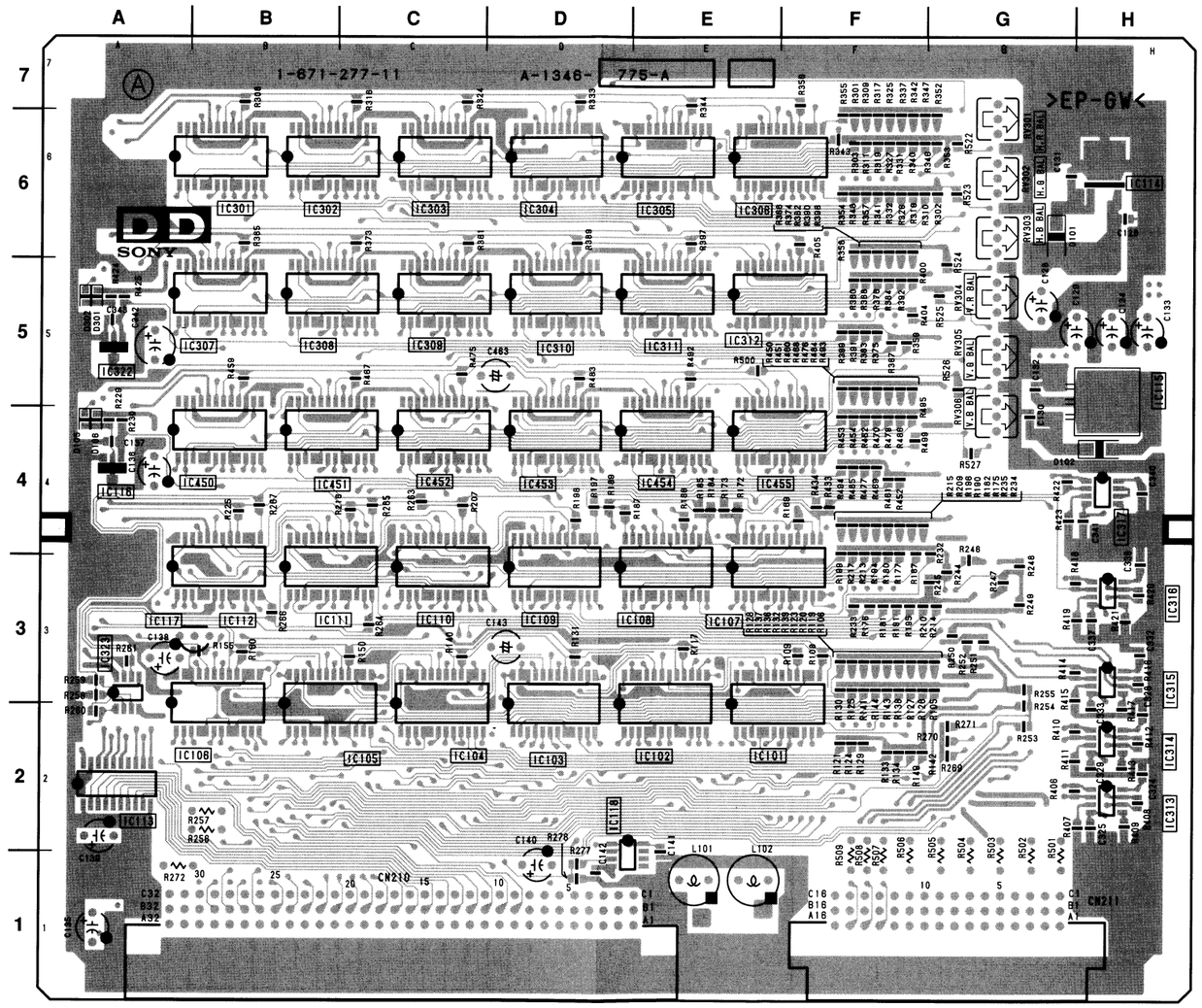

DD -A SIDE-
SUFFIX: -11

DD BOARD

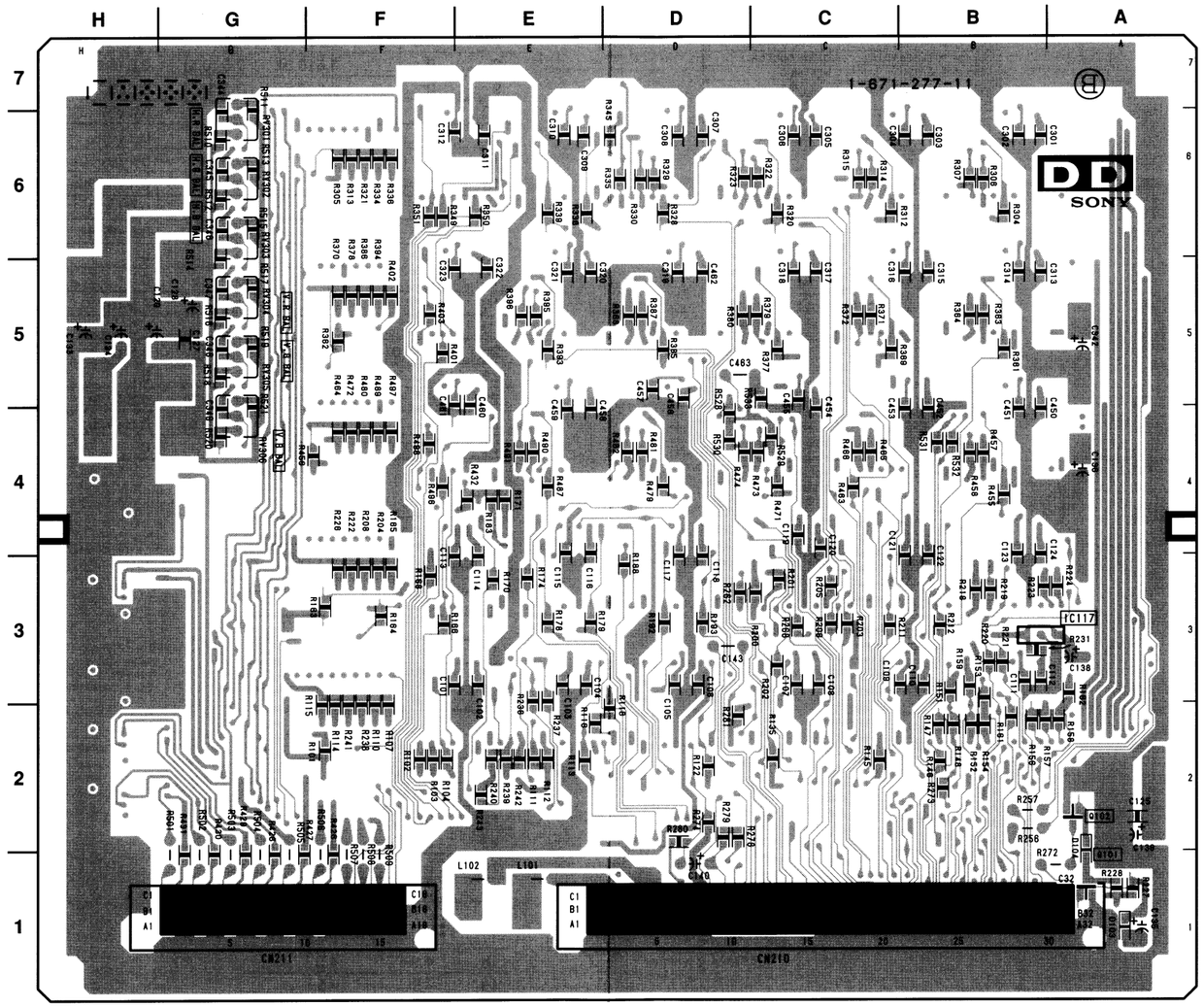

DD -B SIDE-
SUFFIX: -11

DD BOARD (B SIDE)

D103	A-1
D104	A-2
IC117	A-3
Q101	A-1
Q102	A-2
RV301	G-6
RV302	G-6
RV303	G-6
RV304	G-5
RV305	G-5
RV306	G-4

DD BORAD FUNCTIONS

REF	TYPE NAME	FUNCTION
IC101	MP7670AS	SIZE. VSKEW ADJ
IC102	MP7670AS	V BOW. PIN ADJ
IC103	MP7670AS	H LIN ADJ
IC104	MP7670AS	H BOW. SKEW ADJ
IC105	MP7670AS	H KEY SKEW ADJ
IC106	MP7670AS	H CENT ADJ
IC107	MP7670AS	ZONE 4 ADJ
IC108	MP7670AS	ZONE 2. 3 ADJ
IC109	MP7670AS	L/R PIN ADJ
IC110	MP7670AS	T/B PIN ADJ
IC111	MP7670AS	L/R KEY ADJ
IC112	MP7670AS	T/B KEY ADJ
IC113	TC74HC541AF	DATA BUFFER
IC114	BA05FP	+5V REG
IC115	LM2990SX	-5V REG
IC116	RH5VL43AA	P-ON RESET-1
IC117	TL431CLP-Z	VOLTAGE REF
IC118	AD826AR	H PARA BUFFER
IC301	MP7670AS	ZONE 17 ADJ
IC302	MP7670AS	ZONE 18 ADJ
IC303	MP7670AS	ZONE 19 ADJ
IC304	MP7670AS	ZONE 20 ADJ
IC305	MP7670AS	ZONE 21. 22 ADJ
IC306	MP7670AS	ZONE 23. 24. 25 ADJ
IC307	MP7670AS	ZONE 11 ADJ
IC308	MP7670AS	ZONE 12 ADJ
IC309	MP7670AS	ZONE 13 ADJ
IC310	MP7670AS	ZONE 14 ADJ
IC311	MP7670AS	ZONE 15 ADJ
IC312	MP7670AS	ZONE 16 ADJ
IC313	AD828AR	SUB BUFFER AMP-1
IC314	AD828AR	SUB BUFFER AMP-2
IC315	AD828AR	SUB BUFFER AMP-3
IC316	AD828AR	MOD BUFFER AMP-1
IC317	AD828AR	MOD BUFFER AMP-2
IC322	RH5VL43AA	P-ON RESET-2
IC323	AD828AR	C.BLK BUFFER AMP
IC450	MP7670AS	ZONE 5 ADJ
IC451	MP7670AS	ZONE 6 ADJ
IC452	MP7670AS	ZONE 7 ADJ
IC453	MP7670AS	ZONE 8 ADJ
IC454	MP7670AS	ZONE 9 ADJ
IC455	MP7670AS	ZONE 10 ADJ
Q101	2SC2712	-5V PROT
Q102	DTC144EKA	5V PROT
D101	1SR154-400TE-25	REG PROTECTOR-1
D102	1SR154-400TE-25	REG PROTECTOR-2
D103	UDZ3.6B	LIMITER-1
D104	MA111	LIMITER-2
D105	MA111	RESET-1
D106	MA111	DISCHARGE-1
D301	MA111	DISCHARGE-2
D302	MA111	RESET-2

DD MOUNT (1/2) VOLTAGES

Pin No.	IC101	IC102	IC103	IC104	IC105	IC106	IC107	IC108	IC109	IC110
1	0.1 (0)	0.1 (0)	0	0.1 (0)	0.7 (0)	0.7 (0)	0	0.1 (0)	0.1 (0)	0.1 (0)
2	0.1 (0)	0.2 (0)	0.4 (0)	0.1 (0)	0.3 (0)	0.3 (0)	0	0.1 (0)	0.1 (0)	0.1 (0)
3	0.1 (0)	0	0	0	0.1 (0)	1 (0)	0	0.1 (0)	0.1 (0)	0
4	0	0.6 (0.5)	0.6 (0.5)	0	2.2	2.2	0.5 (0)	0.3 (0)	0	0
5	0	0.6 (0.5)	0	0	2.2	2.2	0.5 (0)	0.3 (0)	0	0
6	GND	GND	GND	GND	GND	GND	GND	GND	GND	GND
7	4.9	4.9	4.9	4.9	4.9	4.9	4.9	4.9	4.9	4.9
8	0	0.6 (0.5)	0.6 (0.5)	0.5 (0.3)	0	2.2	0.5 (0)	−0.3 (−0.2)	0	0
9	0	0.6 (0.5)	0.6 (0.5)	0.5 (0.3)	0	2.2	0.5 (0)	−0.3 (−0.2)	0	0
10	0	0	0	0.1 (0)	0	0.4 (0)	0.1 (0)	0.1 (0)	0	0.1 (0)
11	0.1 (0)	0.1 (0)	0	0.1 (0)	0.1 (0)	0.2 (0)	0.1 (0)	0.1 (0)	0	0.1 (0)
12	0.1 (0)	0	0.1 (0)	0.1 (0)	0	0.4 (0)	0.1 (0)	0.1 (0)	0	2.5 (0)
13	0.1 (0)	0	0.1 (0)	0.1 (0)	0.1 (0)	0	0	−0.6 (−0.5)	0	2.5
14	0	0	0.6 (0.5)	0.5 (0.3)	0	2.2	0.5 (0)	−0.3 (−0.2)	0	0 (2.4)
15	0	0	0	0.5 (0.3)	0	2.2	0	0.6 (0.5)	0	0 (2.4)
16	0	0	0	0	0	0	0	0	0	0 0
17	0	0	0	0	0	0	0	0	0	0 0
18	N.C	4.9 (0)	4.9 (0)	4.9 (0)	4.9 (0)	4.9 (0)	N.C	4.9	4.9	4.9
19	−5	−5	−5	−5	−5	−5	−5	−5	−5	−5
20	4.9 (0)	4.9 (0)	4.9 (0)	4.9 (0)	4.9 (0)	0	4.9	4.9	4.9	4.9
21	5	5	5	5	5	5	5	5	5	5
22	0	0.6 (0.5)	0.6 (0.5)	0.5 (0.3)	0.5 (0.3)	2.2	0.5 (0)	0	0	0
23	0	0.6 (0.5)	0.6 (0.5)	0.5 (0.3)	0	2.2	0.5 (0)	0.3 (0)	0	0
24	0.1 (0)	0.1 (0)	0	0	0	0	0.5 (0)	0	0	0

Pin No.	IC111	IC112
1	0.1 (0)	0.1 (0)
2	0.1 (0)	0.1 (0)
3	0.1 (0)	0
4	0	0
5	0	0
6	GND	GND
7	4.9	4.9
8	0	0
9	0	0
10	0.1 (0)	0.1 (0)
11	0.1 (0)	0
12	0.1 (0)	0
13	0.1 (0)	0
14	0	0.6
15	0	0.6
16	0	0.6
17	0	0
18	4.9	4.9
19	−5	−5
20	4.9	4.9 (0)
21	5	5
22	0	0
23	0	0
24	0	0

Note: No Mark is VIDEO signal and common. ( ) Mark is Component signal.

DD (1/2) BOARD

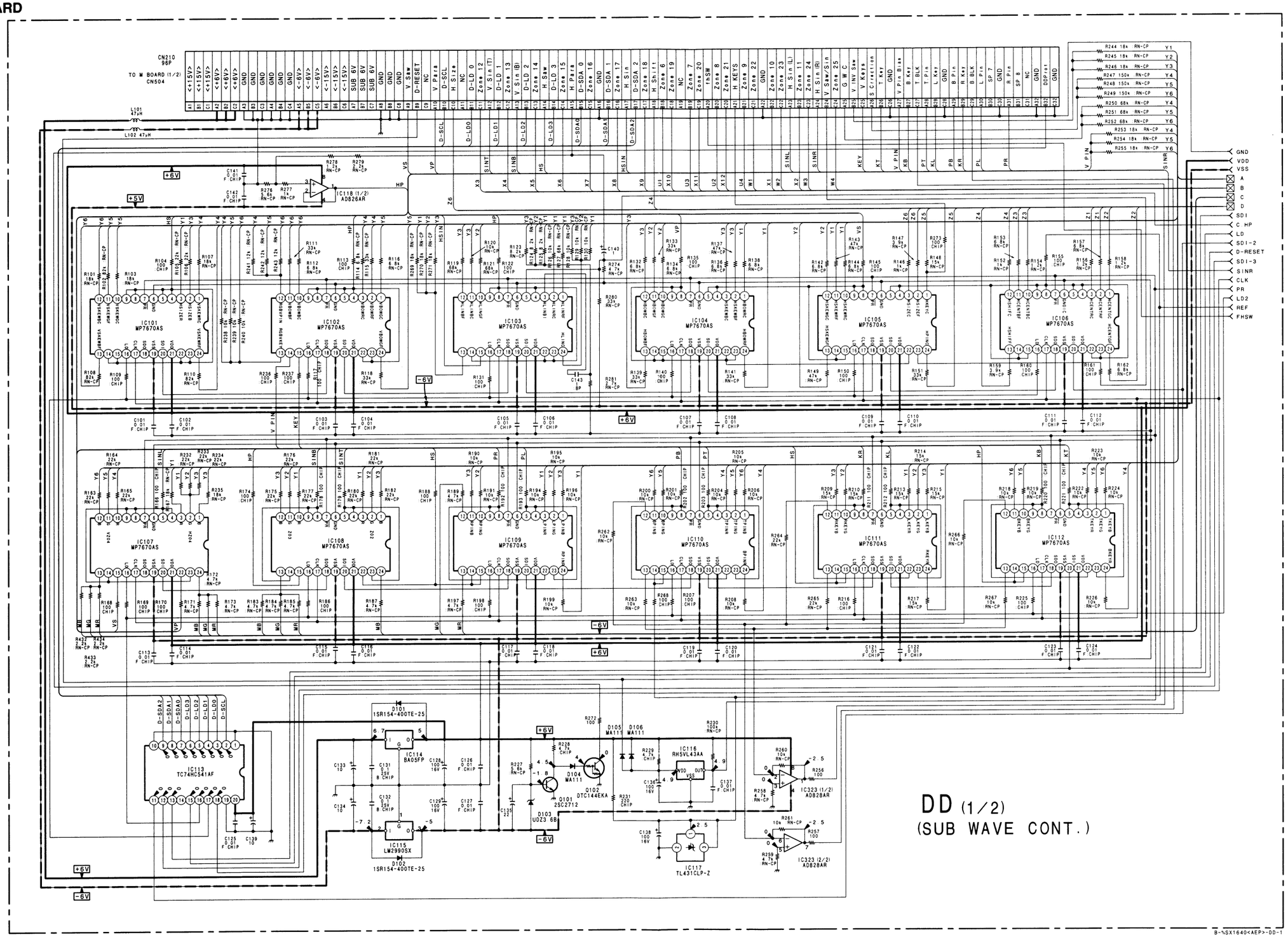
CN210
96P
TO M BOARD (1/2)
CN504
IC101
MP7670AS
IC102
MP7670AS
IC103
MP7670AS
IC104
MP7670AS
IC105
MP7670AS
IC106
MP7670AS
IC107
MP7670AS
IC108
MP7670AS
IC109
MP7670AS
IC110
MP7670AS
IC111
MP7670AS
IC112
MP7670AS
IC113
TC74HC541AF
IC114
BA05FP
IC115
LM2990SX
IC116
RH5VL43AA
IC117
TL431CLP-Z
IC118 (1/2)
AD826AR
IC323 (1/2)
AD828AR
IC323 (2/2)
AD828AR
Q101
2SC2712
Q102
DTC144EKA
D101
1SR154-400TE-25
D102
1SR154-400TE-25
D103
UDZ3.6B
D104
MA111
D105
MA111
D106
MA111
GND
VDD
VSS
A
B
C
D
SDI
C HP
LD
SDI-2
D-RESET
SDI-3
SINR
CLK
PR
LD2
REF
FHSW
+6V
+5V
-6V
DD (1/2)
(SUB WAVE CONT.)
B-%SX1640<AEP>-DD-1

DD BOARD (1/2) IC101-112
DD BOARD (2/2) IC301-312, 450-455
MP7670AS

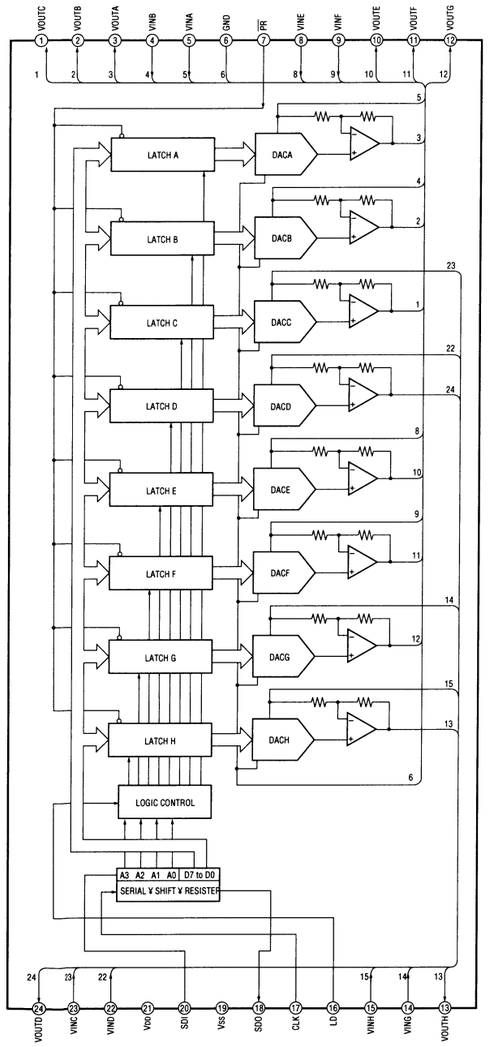

DD MOUNT (2/2) VOLTAGES

Pin No.	IC301	IC302	IC303	IC304	IC305	IC306	IC307	IC308	IC309	IC310
1	0.1 (0)	0.1 (0)	0	0.1 (0)	0	0	0	0	0	0
2	0.1 (0)	0.1 (0)	0	0	0.1 (0)	0	0.1 (0)	0.1 (0)	0.1 (0)	0.1 (0)
3	0.1 (0)	0.1 (0)	0	0	0.1 (0)	0	0.1 (0)	0.1 (0)	0.1 (0)	0.1 (0)
4	0.1 (0)	−0.2 (0)	0.2 (0)	0.2 (0)	−0.2	−0.2	0.1 (0)	0.1 (0)	0.1 (0)	0.1 (0)
5	0.1 (0)	−0.2 (0)	0.2 (0)	0.2 (0)	−0.2	−0.2	0.1 (0)	0.1 (0)	0.1 (0)	0.1 (0)
6	GND	GND	GND	GND	GND	GND	GND	GND	GND	GND
7	4.9	4.9	4.9	4.9	4.9	4.9	4.9	4.9	4.9	4.9
8	0.1 (0)	−0.2 (0)	0.2 (0)	0.2 (0)	−0.2 (0)	0.2	0.1 (0)	0.1 (0)	0.1 (0)	0.1 (0)
9	0.1 (0)	−0.2 (0)	0.2 (0)	0.2 (0)	−0.2 (0)	−0.3	0.1 (0)	0.1 (0)	0.1 (0)	0.1 (0)
10	0.1 (0)	0.1 (0)	0.1 (0)	0.1 (0)	0.1 (0)	0	0.1 (0)	0.1 (0)	0.1 (0)	0.1 (0)
11	0.1 (0)	0.1 (0)	0.1 (0)	0.1 (0)	0.1 (0)	0	0.1 (0)	0.1 (0)	0.1 (0)	0.1 (0)
12	0.1 (0)	0	0	0.1 (0)	0.1 (0)	0.1 (0)	0.1 (0)	0.1 (0)	0.1 (0)	0.1 (0)
13	N.C	N.C	N.C	0.1 (0)	0.1 (0)	0.1 (0)	N.C	N.C	N.C	N.C
14	0.1 (0)	−0.2 (0)	0.2 (0)	−0.2	0.2 (0)	−0.3	0.1 (0)	0.1 (0)	0.1 (0)	0.1 (0)
15	0	0	GND	−0.2	−0.2	−0.3	GND	GND	GND	GND
16	0	0	0	0	0	0	0	0	0	0
17	0	0	0	0	0	0	0	0	0	0
18	4.9	4.9	4.9	4.9	4.9	4.9	4.9 (0)	4.9 (0)	4.9 (0)	4.9 (0)
19	−5	−5	−5	−5	−5	−5	−5	−5	−5	−5
20	0	4.9	4.9	4.9	4.9	4.9	0	4.9 (0)	4.9 (0)	4.9 (0)
21	5	5	5	5	5	5	5	5	5	5
22	GND	GND	GND	0.2 (0)	−0.2	0.2	GND	GND	GND	GND
23	0.1 (0)	−0.2 (0)	0.2 (0)	0.2 (0)	−0.2	0.2	0.1 (0)	0.1 (0)	0.1 (0)	0.1 (0)
24	N.C	N.C	N.C	0	0.1 (0)	0	N.C	N.C	N.C	N.C

Pin No.	IC311	IC312	IC450	IC451	IC452	IC453	IC454	IC455
1	0	0	0.1 (0)	0.1 (0)	0.1 (0)	0.1 (0)	0.1 (0)	0.1 (0)
2	0.1 (0)	0.1 (0)	0.1 (0)	0.1 (0)	0.1 (0)	0.1 (0)	0.1 (0)	0.1 (0)
3	0.1 (0)	0.1 (0)	0.1 (0)	0.1 (0)	0.1 (0)	0.1 (0)	0.1 (0)	0.1 (0)
4	0.1 (0)	0.1 (0)	−0.5 (−0.4)	0.1 (0)	0.1 (0)	0.1 (0)	0.1 (0)	0.1 (0)
5	0.1 (0)	0.1 (0)	−0.5 (−0.4)	0.1 (0)	0.1 (0)	0.1 (0)	0.1 (0)	0.1 (0)
6	GND	GND	GND	GND	GND	GND	GND	GND
7	4.9	4.9	4.9	4.9	4.9	4.9	4.9	4.9
8	0.1 (0)	0.1 (0)	−0.5 (−0.4)	0.1 (0)	0.1 (0)	0.1 (0)	0.1 (0)	0.1 (0)
9	0.1 (0)	0.1 (0)	−0.5 (−0.4)	0.1 (0)	0.1 (0)	0.1 (0)	0.1 (0)	0.1 (0)
10	0.1 (0)	0.1 (0)	0.1 (0)	0.1 (0)	0.1 (0)	0.1 (0)	0.1 (0)	0.1 (0)
11	0.1 (0)	0.1 (0)	0.1 (0)	0.1 (0)	0.1 (0)	0.1 (0)	0.1 (0)	0.1 (0)
12	0.1 (0)	0.1 (0)	0.1 (0)	0.1 (0)	0.1 (0)	0.1 (0)	0.1 (0)	0.1 (0)
13	N.C	N.C	N.C	N.C	N.C	N.C	N.C	N.C
14	0.1 (0)	0.1 (0)	−0.5 (−0.4)	0.1 (0)	0.1 (0)	0.1 (0)	0.1 (0)	0.1 (0)
15	GND	GND	GND	GND	0	GND	GND	GND
16	0	0	0	0	0	0	0	0
17	0	0	0	0	0	0	0	0
18	4.9 (0)	N.C	4.9 (0)	4.9 (0)	4.9 (0)	4.9 (0)	4.9 (0)	N.C
19	−5	−5	−5	−5	−5	−5	−5	−5
20	4.9 (0)	4.9 (0)	0	4.9 (0)	4.9 (0)	4.9 (0)	4.9 (0)	4.9 (0)
21	5	5	5	5	5	5	5	5
22	GND	GND	GND	2.2	GND	GND	GND	GND
23	0.1 (0)	0.1 (0)	−0.5 (−0.4)	0.1 (0)	0.1 (0)	0.1 (0)	0.1 (0)	0.1 (0)
24	N.C	N.C	N.C	0.1 (0)	N.C	N.C	N.C	N.C

Note: No Mark is VIDEO signal and common. ( ) Mark is Component signal.

DD (2/2) BOARD

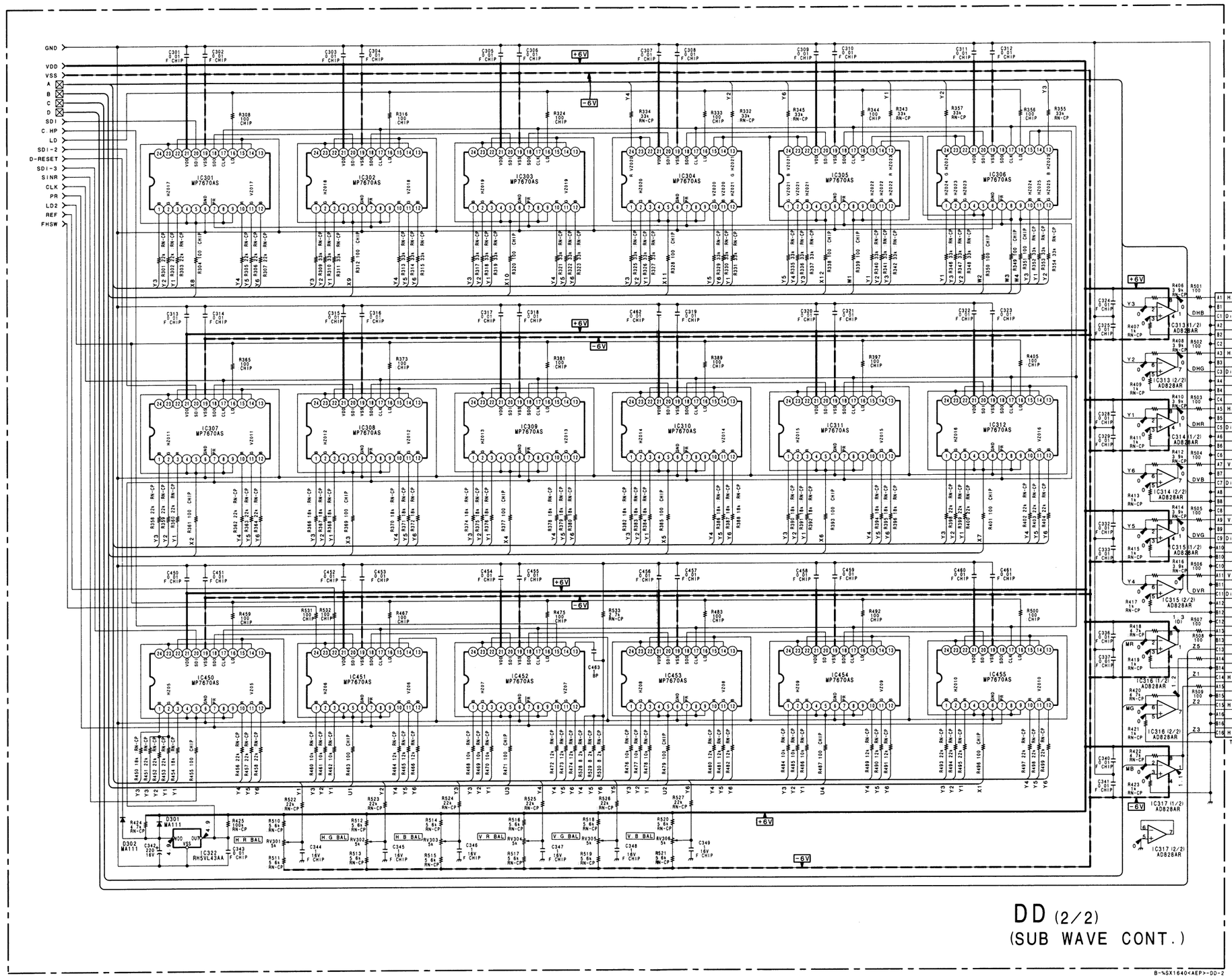
GND
VDD
VSS
A
B
C
D
SDI
C-HP
LD
SDI-2
D-RESET
SDI-3
SINR
CLK
PR
LD2
REF
FHSW
+6V
-6V
IC301 MP7670AS
IC302 MP7670AS
IC303 MP7670AS
IC304 MP7670AS
IC305 MP7670AS
IC306 MP7670AS
IC307 MP7670AS
IC308 MP7670AS
IC309 MP7670AS
IC310 MP7670AS
IC311 MP7670AS
IC312 MP7670AS
IC450 MP7670AS
IC451 MP7670AS
IC452 MP7670AS
IC453 MP7670AS
IC454 MP7670AS
IC455 MP7670AS
IC323 RH5VL43AA
D301 MA111
D302 MA111
H G BAL
H R BAL
H B BAL
V R BAL
V G BAL
V B BAL
IC313 (1/2) AD828AR
IC313 (2/2) AD828AR
IC314 (1/2) AD828AR
IC314 (2/2) AD828AR
IC315 (1/2) AD828AR
IC315 (2/2) AD828AR
IC316 (1/2) AD828AR
IC316 (2/2) AD828AR
IC317 (1/2) AD828AR
IC317 (2/2) AD828AR
CN211 48P
H SubOut (B)
Dig H SubBIN
H SubOut (G)
Dig H SubGIN
H SubOut (R)
Dig H SubRIN
V SubOut (B)
Dig V SubBIN
V SubOut (G)
Dig V Sub (G)
V SubOut (R)
Dig V SubRIN
R Mod
Key/Pin
G Mod
H Center (R)
B Mod
H Center (G)
H Center (B)
TO M BOARD CN505
DD (2/2)
(SUB WAVE CONT.)
B-%SX1640<AEP>-DD-2

DE BOARD (A SIDE)

D1	E-1
D2	E-1
D3	B-7
D4	A-1
D5	B-1
D6	D-1
D7	A-6
D8	B-5
D9	B-6
IC1	D-1
IC2	F-1
IC4	A-2
IC5	B-2
IC6	A-1
IC7	B-8
IC8	B-2
IC9	A-1
IC10	C-2
IC11	A-1
IC12	A-6
IC13	A-8
IC15	B-3
IC17	A-3
IC19	A-4
IC100	C-7
IC101	D-8
IC102	E-7
IC104	F-2
IC105	F-3
IC106	C-6
IC107	D-6
IC108	E-6
IC110	E-3
IC111	C-5
IC112	D-5
IC113	E-5
IC115	F-4
IC116	F-4
IC117	C-4
IC118	D-4
IC119	E-4
IC121	F-5
IC122	F-5
IC123	C-3
IC124	D-3
IC125	E-3
IC127	F-6
IC128	F-6
IC129	C-2
IC130	D-2
IC131	E-2
IC133	F-7
Q1	B-7
Q2	B-6
Q3	B-6
Q4	A-7
Q5	B-4
Q6	B-4
Q7	A-7
Q8	B-4
Q9	A-4
Q10	B-7
Q11	B-6
Q12	A-5
Q13	A-6
Q14	A-4
Q15	A-4
Q16	A-4
Q17	A-4
Q134	B-6
TP1	A-2
TP2	A-6
TP3	F-8
TP4	A-4

DE BOARD

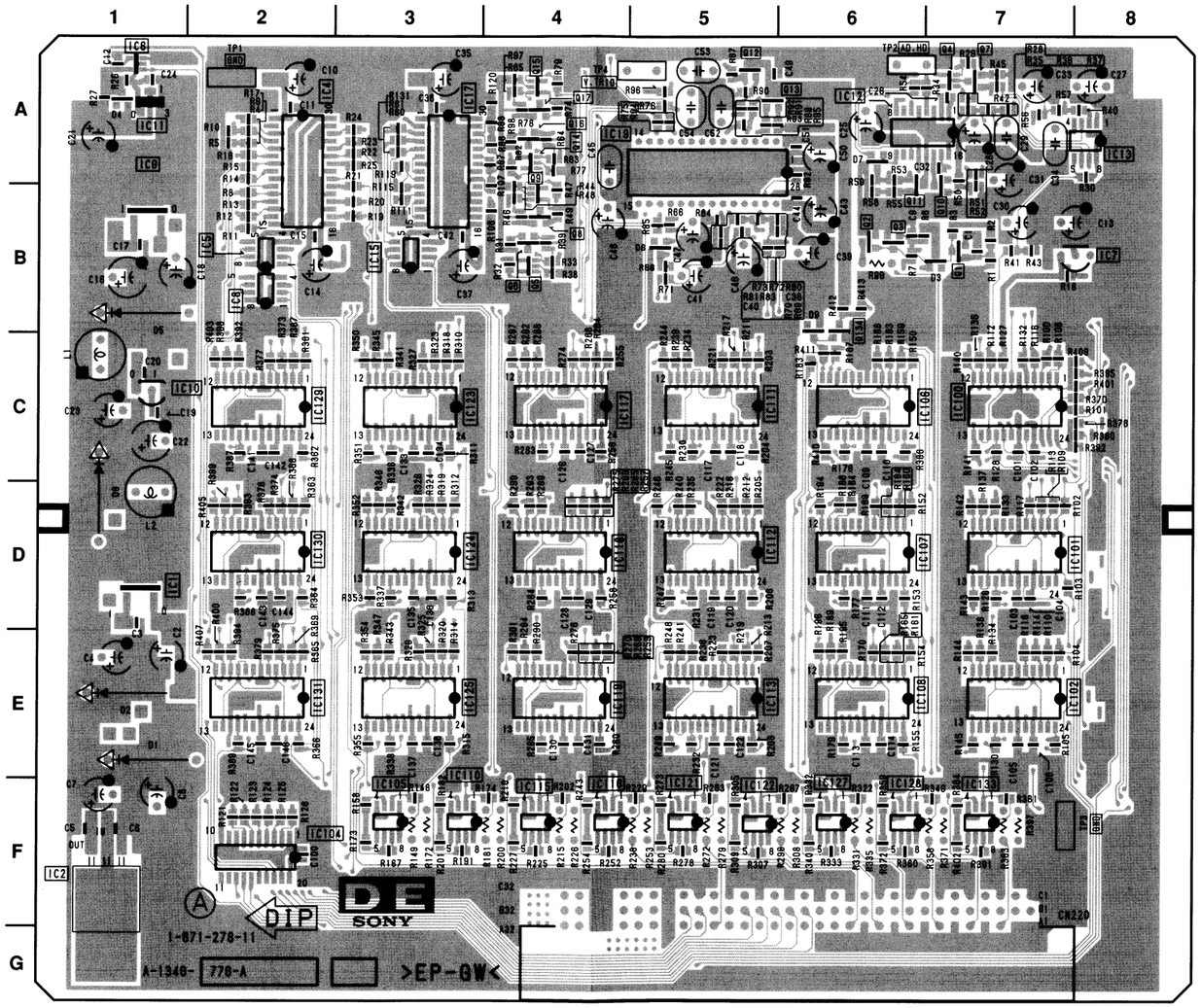

DE -A SIDE-
SUFFIX: -11

DE BOARD

DE BOARD (B SIDE)

D1	E-7
D2	E-8
D5	C-8
D6	D-8
IC7	B-1
IC10	C-7
IC19	A-4
TP1	A-7
TP2	A-2
TP3	F-1
TP4	A-5

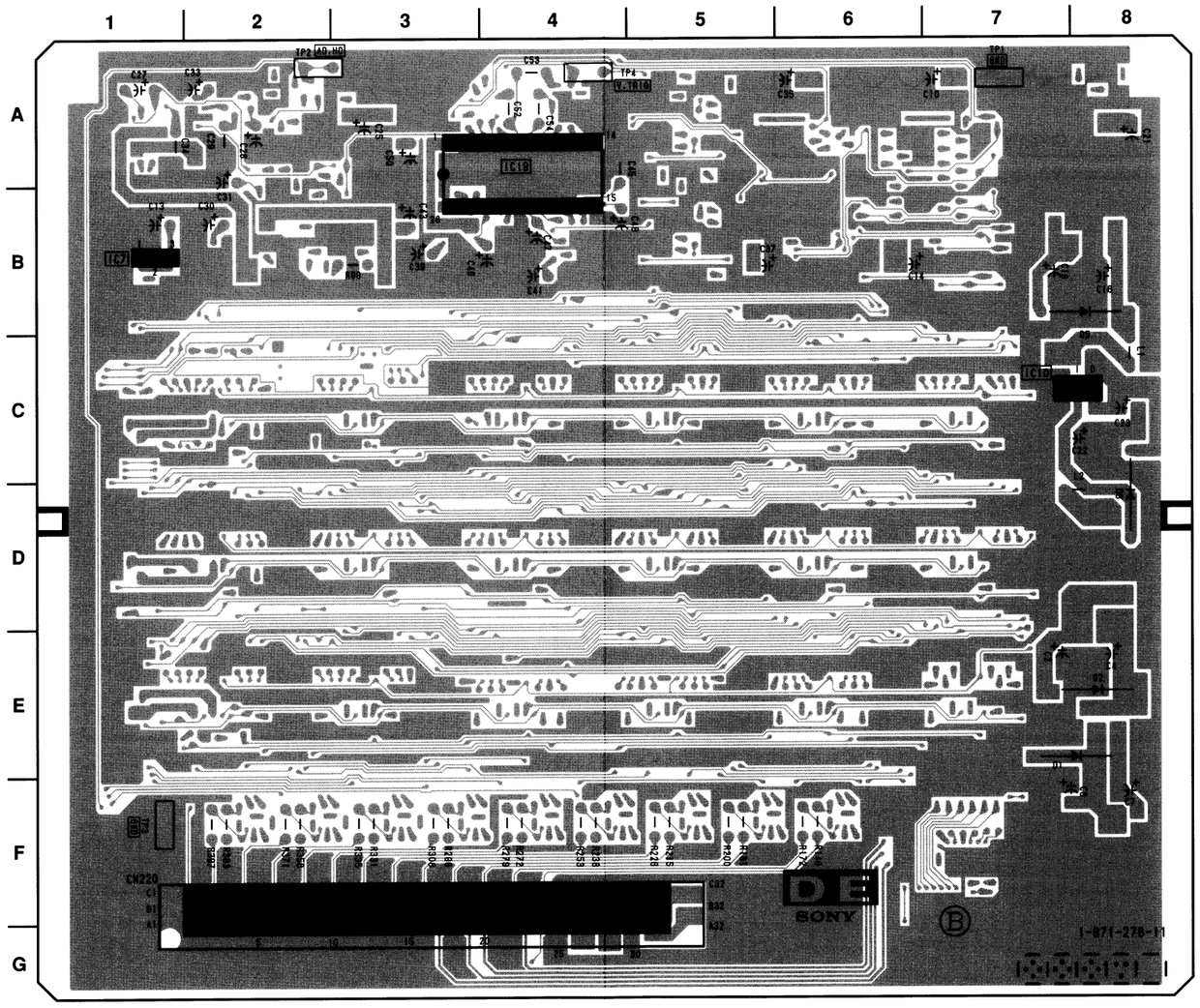

DE -B SIDE-
SUFFIX: -11

10-87

DE BOARD WAVEFORMS

① 10.6 V p-p (H)	② 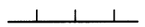 4.3 V p-p (H)	③ 2.3 V p-p (V)	④ 2.6 V p-p (V)	⑤ 3.1 V p-p (H)
⑥ 2.5 V p-p (H)	⑦ 1.7 V p-p (V)	⑧ 0.9 V p-p (V)	⑨ 1.3 V p-p (V)	⑩ 2.0 V p-p (H)
⑪ 2.1 V p-p (V)	⑫ 0.5 V p-p (V)			

DE (1/2) BOARD

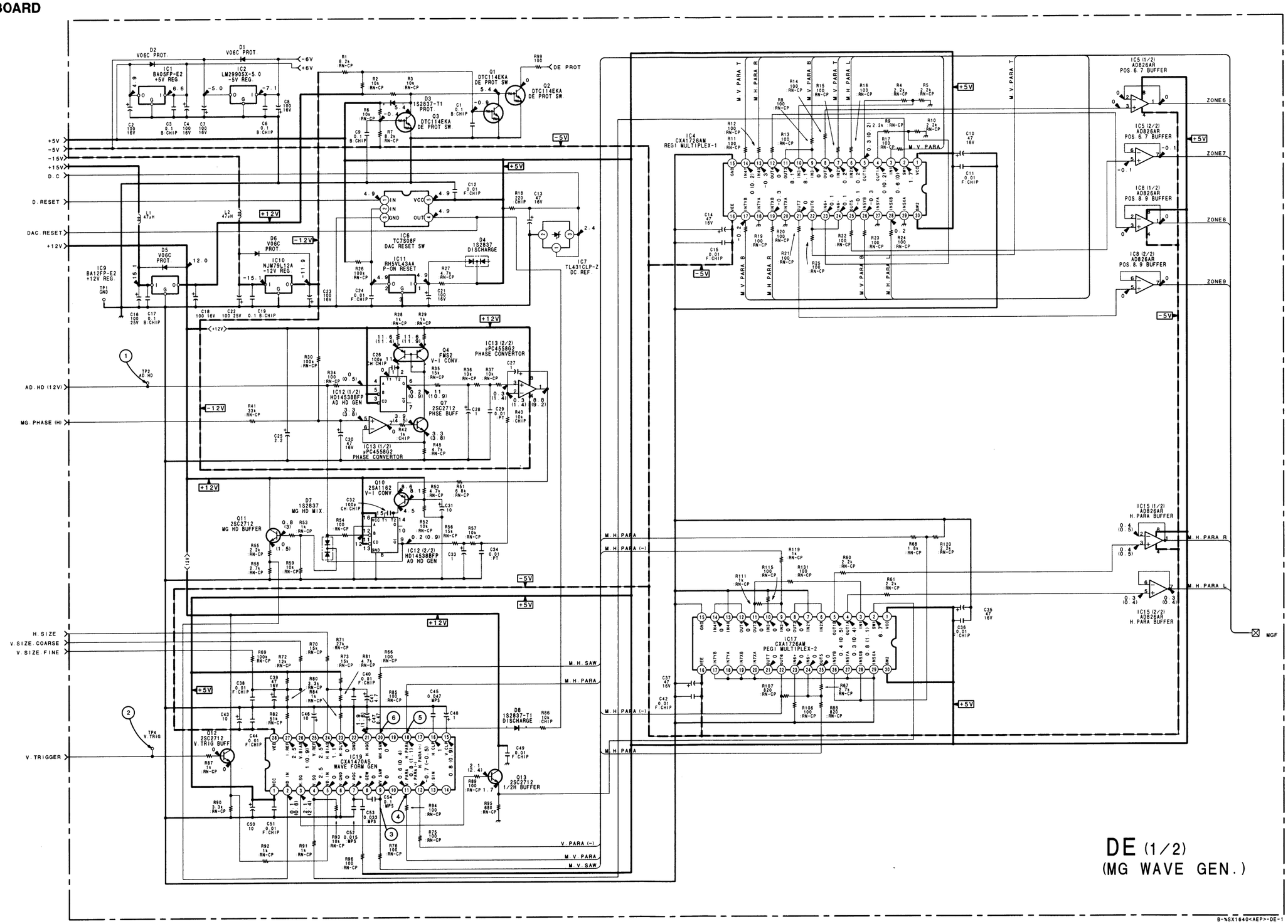
+5V
-5V
-15V
+15V
D.C
D.RESET
DAC.RESET
+12V
AD.HD (12V)
MG.PHASE (H)
H.SIZE
V.SIZE.COARSE
V.SIZE.FINE
V.TRIGGER
DE PROT
ZONE6
ZONE7
ZONE8
ZONE9
M.H.PARA
M.H.PARA (-)
M.H.SAW
V.PARA (-)
M.V.PARA
M.V.SAW
M.H.PARA R
M.H.PARA L
MGF
IC1 BA05FP-E2 +5V REG.
IC2 LM2990SX-5.0 -5V REG.
IC9 BA12FP-E2 +12V REG.
IC10 NJM79L12A -12V REG.
IC6 TC7S08F DAC RESET SW
IC11 RH5VL43AA P-ON RESET
IC7 TL431CLP-Z DC REF.
IC4 CXA1726AM REGI MULTIPLEX-1
IC17 CXA1726AM REGI MULTIPLEX-2
IC19 CXA1470AS WAVE FORM GEN
IC12 (1/2) HD14538BFP AD HD GEN
IC12 (2/2) HD14538BFP AD HD GEN
IC13 (1/2) μPC4558G2 PHASE CONVERTOR
IC13 (2/2) μPC4558G2 PHASE CONVERTOR
IC5 (1/2) AD826AR POS.6.7 BUFFER
IC5 (2/2) AD826AR POS.6.7 BUFFER
IC8 (1/2) AD826AR POS.8.9 BUFFER
IC8 (2/2) AD826AR POS.8.9 BUFFER
IC15 (1/2) AD826AR H.PARA BUFFER
IC15 (2/2) AD826AR H.PARA BUFFER
Q1 DTC114EKA DE PROT SW
Q2 DTC114EKA DE PROT SW
Q3 DTC114EKA DE PROT SW
Q4 FMS2 V-I CONV.
Q7 2SC2712 PHASE BUFF
Q10 2SA1162 V-I CONV
Q11 2SC2712 MG HD BUFFER
Q12 2SC2712 V.TRIG BUFF
Q13 2SC2712 1/2H BUFFER
D1 V06C PROT.
D2 V06C PROT.
D3 1S2837-T1 PROT.
D4 1S2837 DISCHARGE
D5 V06C PROT.
D6 V06C PROT.
D7 1S2837 MG HD MIX
D8 1S2837-T1 DISCHARGE
TP1 GND
TP2 AD HD
TP4 V.TRIG
DE (1/2)
(MG WAVE GEN.)
B-%SX1640<AEP>-DE-1

DE BOARD (1/2) IC19
CXA1470AS

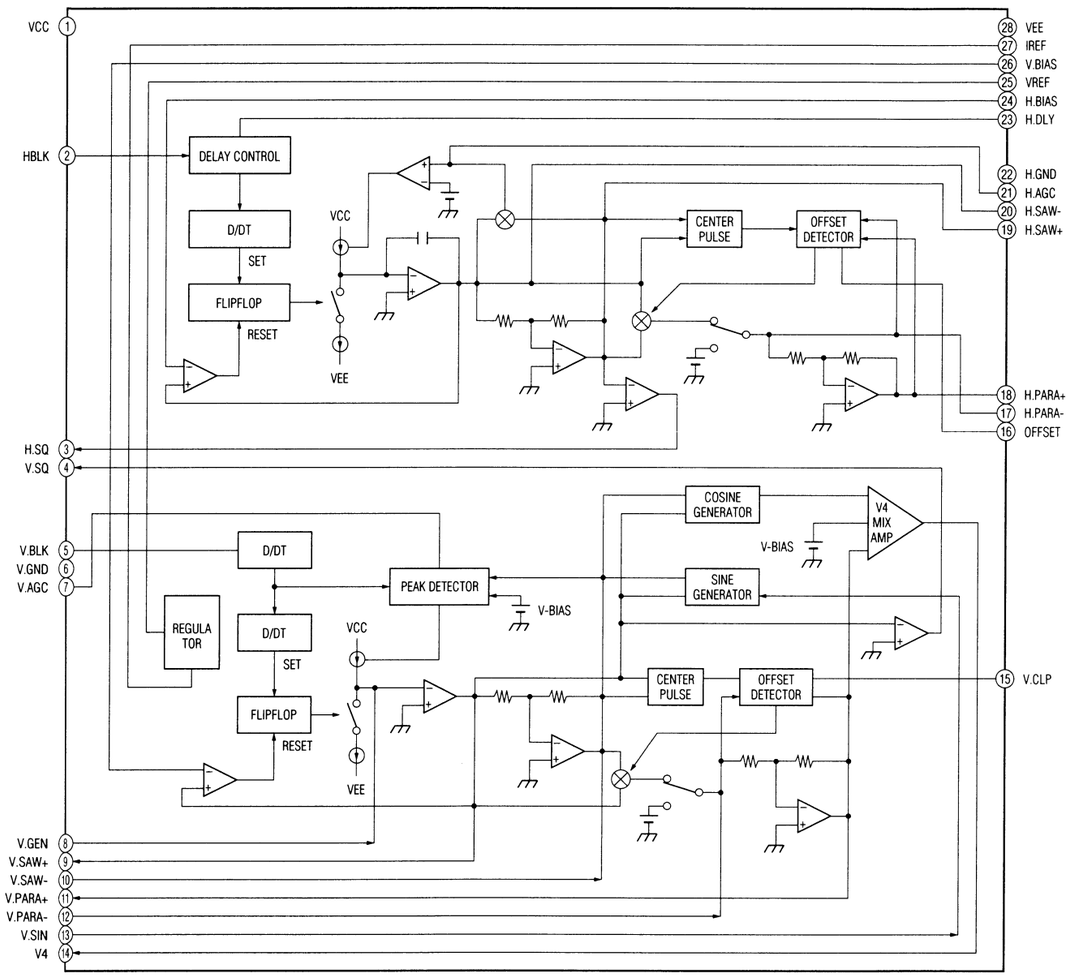

DE MOUNT (2/2) VOLTAGES

Pin No.	IC100	IC101	IC102	IC106	IC107	IC108	IC111	IC112	IC113	IC117
1	−0.6 (−0.4)	0.1 (0)	0	0	0	0	0	0	0	0
2	0	0 (0.1)	0	0	0	0	0	0	0	0
3	0	0.1 (0.2)	0	0	0	0	0	0	0	0
4	0	0.3 (0.4)	0	2.3	0.3 (0.4)	0	0	0.3 (0.5)	0	0
5	0	0.3 (0.4)	0	2.3	0.3 (0.4)	0	0	0.3 (0.5)	0	0
6	GND	GND	GND	GND	GND	GND	GND	GND	GND	GND
7	4.9	4.9	4.9	4.9	4.9	4.9	4.9	4.9	4.9	4.9
8	2.3 (0)	0.3 (0.4)	0	2.3	0.3 (0.4)	0	0	0.3 (0.5)	0	0
9	2.3 (2.4)	0.3 (0.4)	0	2.3	0.3 (0.4)	0	0	0.3 (0.5)	0	0
10	0.7 (0)	0	0	0	0	0	0	0	0	0
11	−0.4 (−0.1)	0	0	0	0	0	0	0	0	0
12	−0.4 (0)	0	0	0	0	0	0	0	0	0
13	0	0	0	0 (0.1)	N.C	N.C	0	0	0	N.C
14	0	0.3 (0.4)	0	2.3	0.3 (0.4)	0	0	0.3 (0.5)	0	0
15	0	0.3 (0.4)	0	2.3	GND	GND	0	0.3 (0.5)	0	GND
16	0	0	0	0	0	0	0	0	0	0
17	0	0	0	0	0	0	0	0	0	0
18	4.9	4.9	4.9	4.9	4.9	4.9	4.9	4.9	4.9	4.9
19	−5	−5	−5	−5	−5	−5	−5	−5	−5	−5
20	0	0	0	4.9	4.9	4.9	4.9	4.9	4.9	4.9
21	5	5	5	5	5	5	5	5	5	5
22	−0.9 (−1.1)	0.3 (0.4)	0	2.3	0.3 (0.4)	0	0	0.3 (0.5)	0	0
23	−0.9 (−0.5)	0.3 (0.4)	0	2.3	0.3 (0.4)	0	0	0.3 (0.5)	0	0
24	−0.9 (−1.1)	0	0	0	0	0	0	0	0	0

Pin No.	IC118	IC119	IC123	IIC124	IC125	IC129	IC130	IC131
1	0	0	0	0	0	0	0	0
2	0	0	0	0	0	0	0	0
3	0	0	0	0	0	0	0	0
4	0.3 (0.5)	0	0	0	0	0	0	0
5	0.3 (0.5)	0	0	0	0	0	0	0
6	GND	GND	GND	GND	GND	GND	GND	GND
7	4.9	4.9	4.9	4.9	4.9	4.9	4.9	4.9
8	0.3 (0.5)	0	0	0	0	0	0	0
9	0.3 (0.5)	0	0	0	0	0	0	0
10	0	0	0	0	0	0	0	0
11	0	0	0	0	0	0	0	0
12	0	0	0	0	0	0	0	0
13	N.C	N.C	0	0	0	0	0	0
14	0.3 (0.5)	0	0	0	0	0	0	0
15	GND	GND	0	0	0	GND	GND	GND
16	0	0	0	0	0	0	0	0
17	0	0	0	0	0	0	0	0
18	4.9	4.9	4.9	4.9	4.9	4.9	4.9	4.9
19	−5	−5	−5	−5	−5	−5	−5	−5
20	4.9	4.9	4.9	4.9	4.9	4.9	4.9	4.9
21	5	5	5	5	5	5	5	5
22	0.3 (0.5)	0	0	0	0	0	0	0
23	0.3 (0.5)	0	0	0	0	0	0	0
24	0	0	0	0	0	0	0	0

Note: No Mark is VIDEO signal and common. ( ) Mark is Component signal.

DE (2/2) BOARD

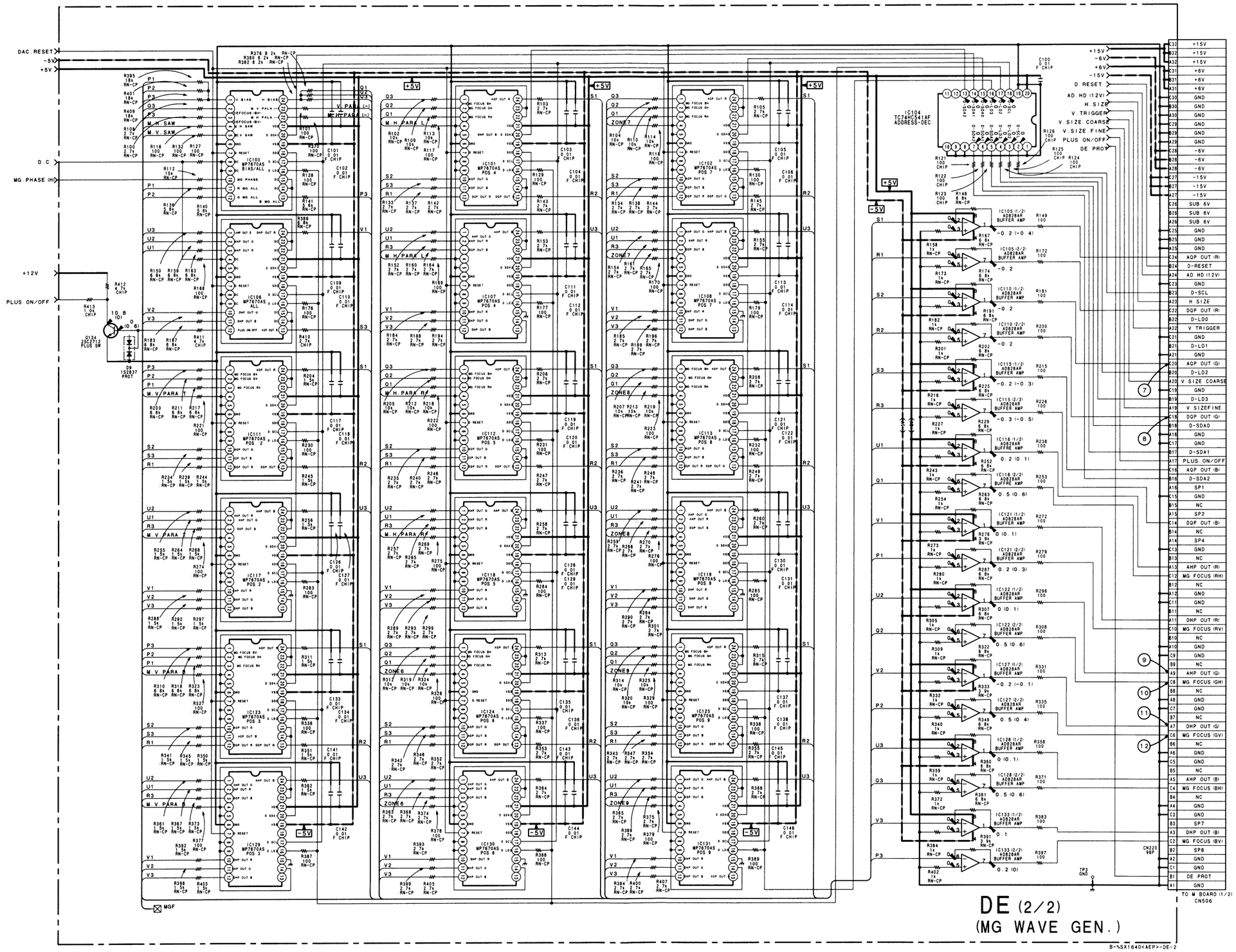
DAC. RESET
-5V
+5V
D. C
MG. PHASE (H)
+12V
PLUS ON/OFF
IC104
TC74HC541AF
ADDRESS-DEC
+15V
-6V
+6V
-15V
D. RESET
AD. HD (12V)
H. SIZE
V. TRIGGER
V. SIZE. COARSE
V. SIZE. FINE
PLUS ON/OFF
DE PROT
TO M BOARD (1/2)
CN506
DE (2/2)
(MG WAVE GEN.)
B-%SX1640<AEP>-DE-2

DF BOARD (A SIDE)

D1	F-3
D2	F-2
D100	A-5
D101	C-4
D102	C-4
D104	A-7
D105	A-5
D106	C-6
D107	C-6
D108	A-6
D109	B-8
D110	C-8
D111	C-8
D112	C-2
D113	C-3
IC2	B-3
IC3	A-4
IC4	A-1
IC8	G-3
IC9	G-2
IC10	A-3
IC11	A-2
IC100	B-7
IC101	C-4
IC102	E-1
IC103	A-8
IC104	C-5
IC105	D-2
IC106	C-7
IC107	E-3
IC108	C-1
IC109	C-2
IC110	A-7
IC201	F-1
IC202	F-1
IC205	F-2
IC208	F-3
IC209	F-2
IC212	E-3
Q1	B-3
Q2	A-2
Q3	B-3
Q4	B-3
Q5	B-4
Q6	A-3
Q101	B-7
Q102	B-7
Q201	E-4
Q202	E-4
Q203	F-4
Q204	F-4
Q205	E-4
Q206	E-5
Q207	F-4
Q208	F-5
Q209	E-5
Q210	E-5
Q211	F-5
Q212	F-5
Q213	E-6
Q214	E-6
Q215	F-6
Q216	F-6
Q217	E-7
Q218	E-7
Q219	F-7
Q220	F-7
Q221	E-7
Q222	E-8
Q223	F-7
Q224	F-8
TP1	A-1
TP2	A-3
TP3	A-3
TP102	D-1
TP201	F-8

DF BOARD

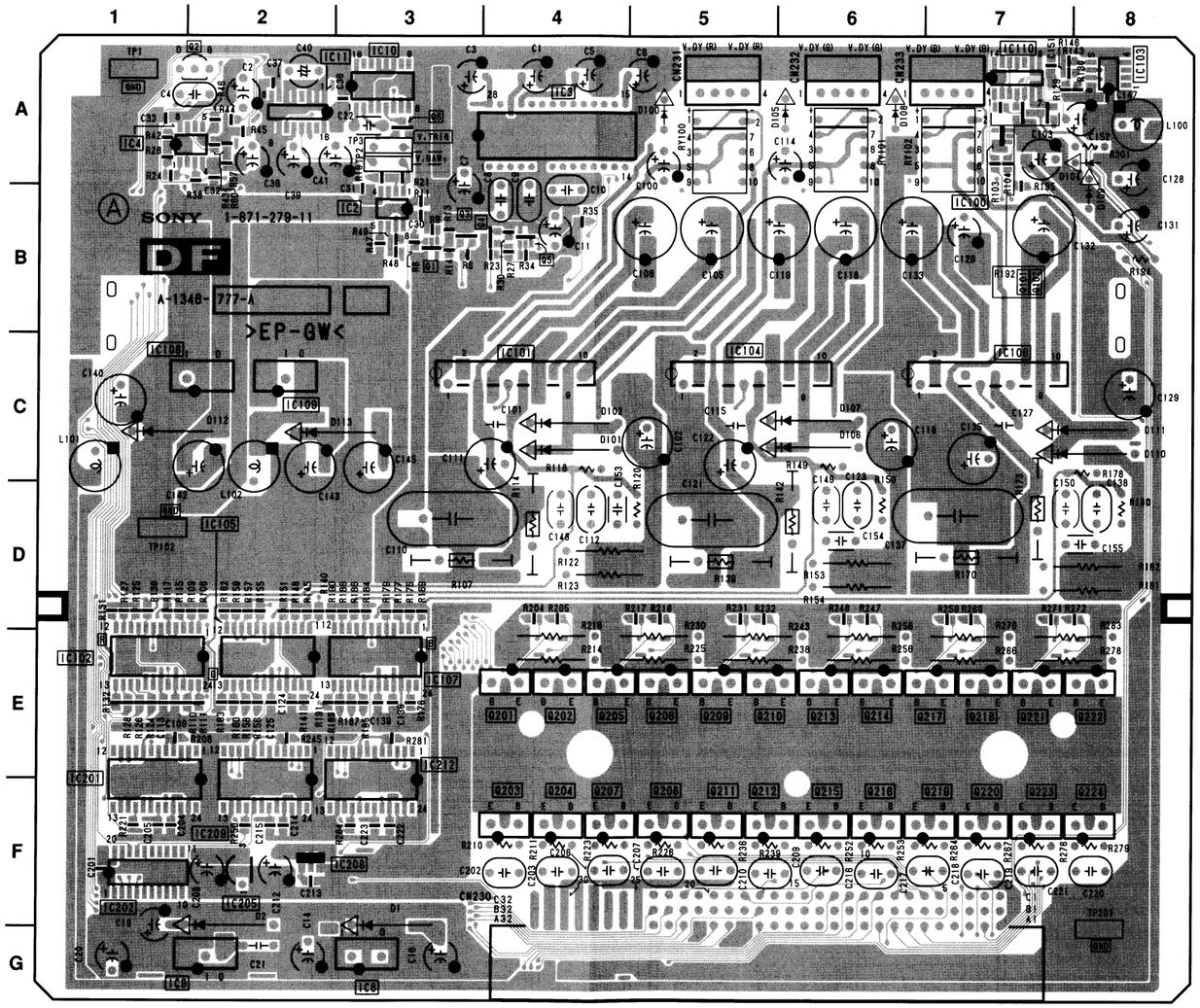

DF -A SIDE-
SUFFIX: -11

DF BOARD

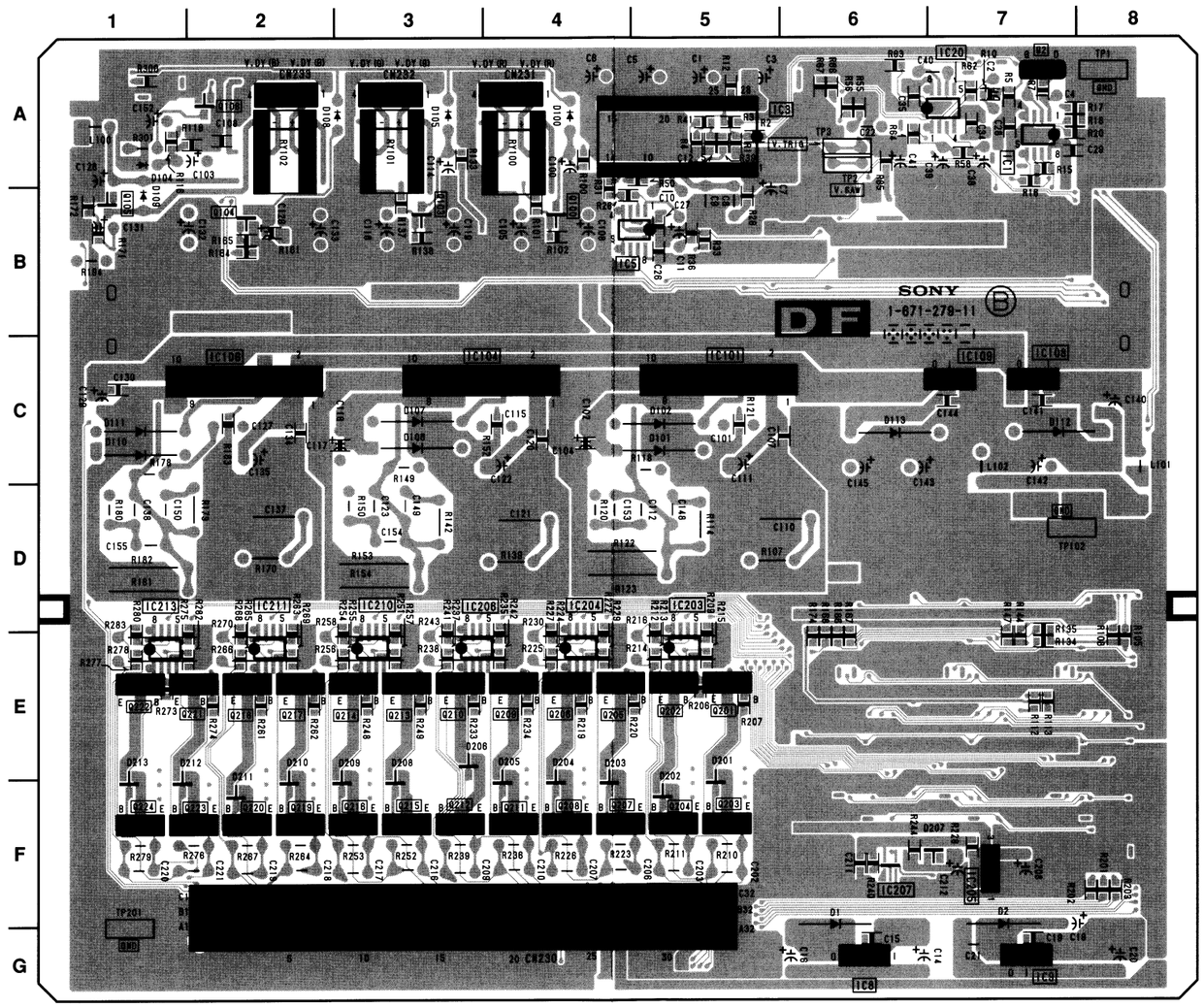

DF -B SIDE-
SUFFIX: -11

DF BOARD (B SIDE)

D1	F-6
D2	F-6
D100	A-4
D101	C-5
D102	C-5
D104	A-1
D105	A-3
D106	C-3
D107	C-3
D108	A-2
D109	B-1
D110	C-1
D111	C-1
D112	C-7
D113	C-6
D201	E-5
D202	E-5
D203	E-4
D204	E-4
D205	E-4
D206	E-3
D207	F-6
D208	E-3
D209	E-3
D210	E-2
D211	E-2
D212	E-2
D213	E-1
IC1	A-7
IC3	A-5
IC5	B-4
IC8	G-6
IC9	G-7
IC20	A-7
IC101	C-5
IC106	C-2
IC106	C-3
IC108	C-7
IC109	C-7
IC203	D-5
IC204	D-4
IC205	F-7
IC206	D-3
IC207	F-6
IC210	D-3
IC211	D-2
IC213	D-1
Q2	A-7
Q100	B-4
Q103	B-3
Q104	B-2
Q105	B-1
Q106	A-2
Q201	E-5
Q202	E-5
Q203	F-5
Q204	F-5
Q205	E-4
Q206	E-4
Q207	F-4
Q208	F-4
Q209	E-4
Q210	E-3
Q211	F-4
Q212	F-3
Q213	E-3
Q214	E-3
Q215	F-3
Q216	F-3
Q217	E-2
Q218	E-2
Q219	F-2
Q220	F-2
Q221	E-2
Q222	E-1
Q223	F-2
Q224	F-1
TP1	A-8
TP2	A-6
TP3	A-6
TP102	D-7
TP201	F-1

DF BOARD WAVEFORMS

① 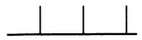 4.4 V p-p (V)	② 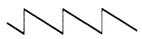 1.9 V p-p (V)	③ 2.0 V p-p (V)	④ 1.3 V p-p (V)	⑤ 1.3 V p-p (V)
⑥ 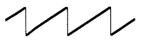 2.2 V p-p (V)	⑦ 67.0 V p-p (V)			

DF (1/3) BOARD

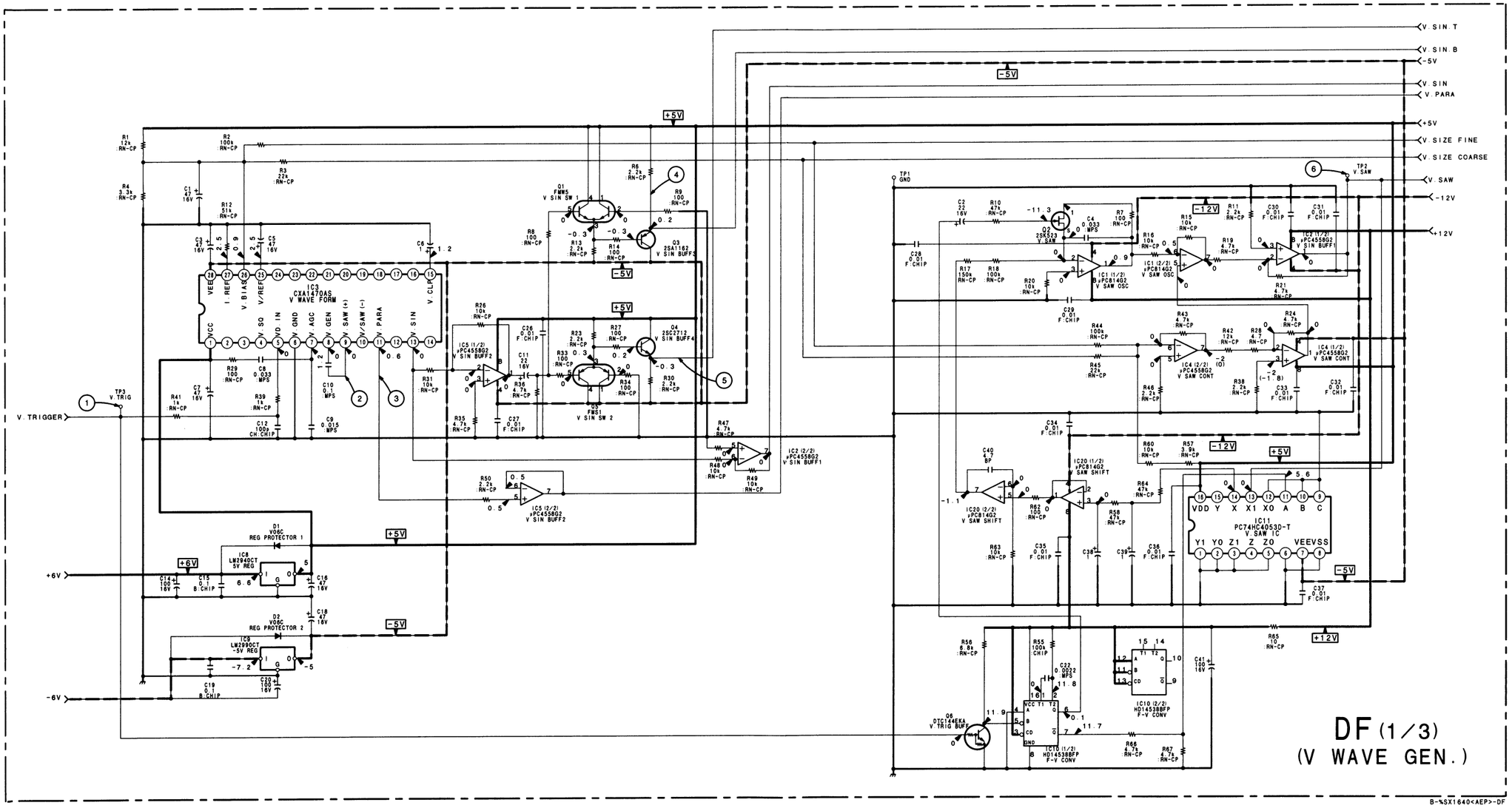
V. SIN. T
V. SIN. B
-5V
V. SIN
V. PARA
+5V
V. SIZE FINE
V. SIZE COARSE
V. SAW
-12V
+12V
V. TRIGGER
+6V
-6V
IC3
CXA1470AS
V WAVE FORM
IC11
PC74HC4053D-T
V SAW IC
DF (1/3)
(V WAVE GEN.)
B-%SX1640<AEP>-DF

DF (2/3) BOARD

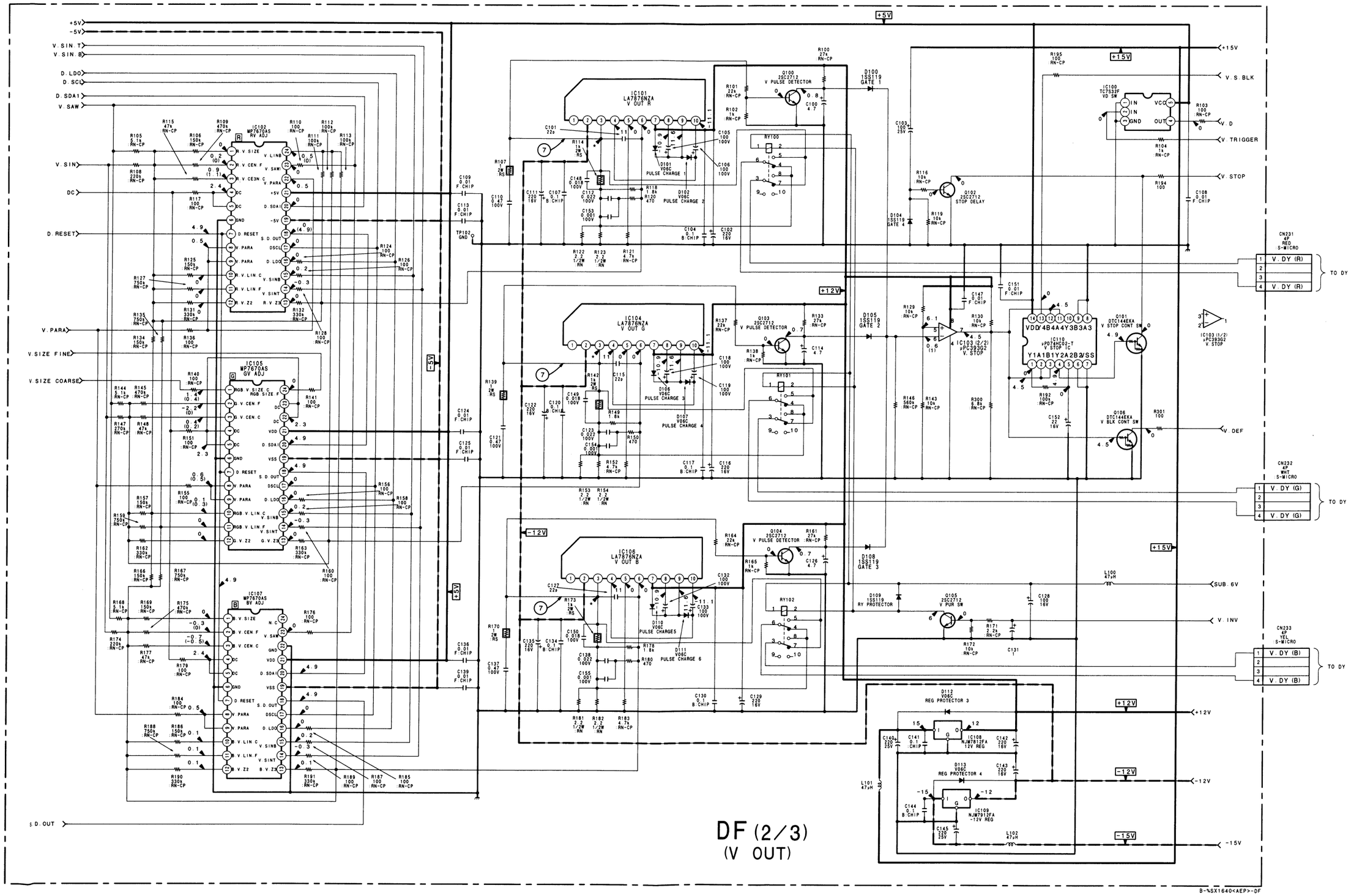
+5V
-5V
V. SIN. T
V. SIN. B
D. LDO
D. SCL
D. SDA1
V. SAW
V. SIN
DC
D. RESET
V. PARA
V. SIZE FINE
V. SIZE COARSE
S. D. OUT
IC102 MP7670AS RV ADJ
IC105 MP7670AS GV ADJ
IC107 MP7670AS BV ADJ
IC101 LA7876NZA V OUT R
IC104 LA7876NZA V OUT G
IC106 LA7876NZA V OUT B
+12V
-12V
+15V
-15V
IC100 TC7S32F VD SW
IC110 μPD74HC02-T V STOP IC
IC103 (1/2) μPC393G2 V. STOP
IC108 NJM7812FA 12V REG
IC109 NJM7912FA -12V REG
V. S. BLK
V. D
V. TRIGGER
V. STOP
V. DEF
SUB. 6V
V. INV
CN231 4P RED S-MICRO
V. DY (R)
CN232 4P WHT S-MICRO
V. DY (G)
CN233 4P YEL S-MICRO
V. DY (B)
TO DY
DF (2/3)
(V OUT)
B-%SX1640<AEP>-DF

DF (3/3) BOARD

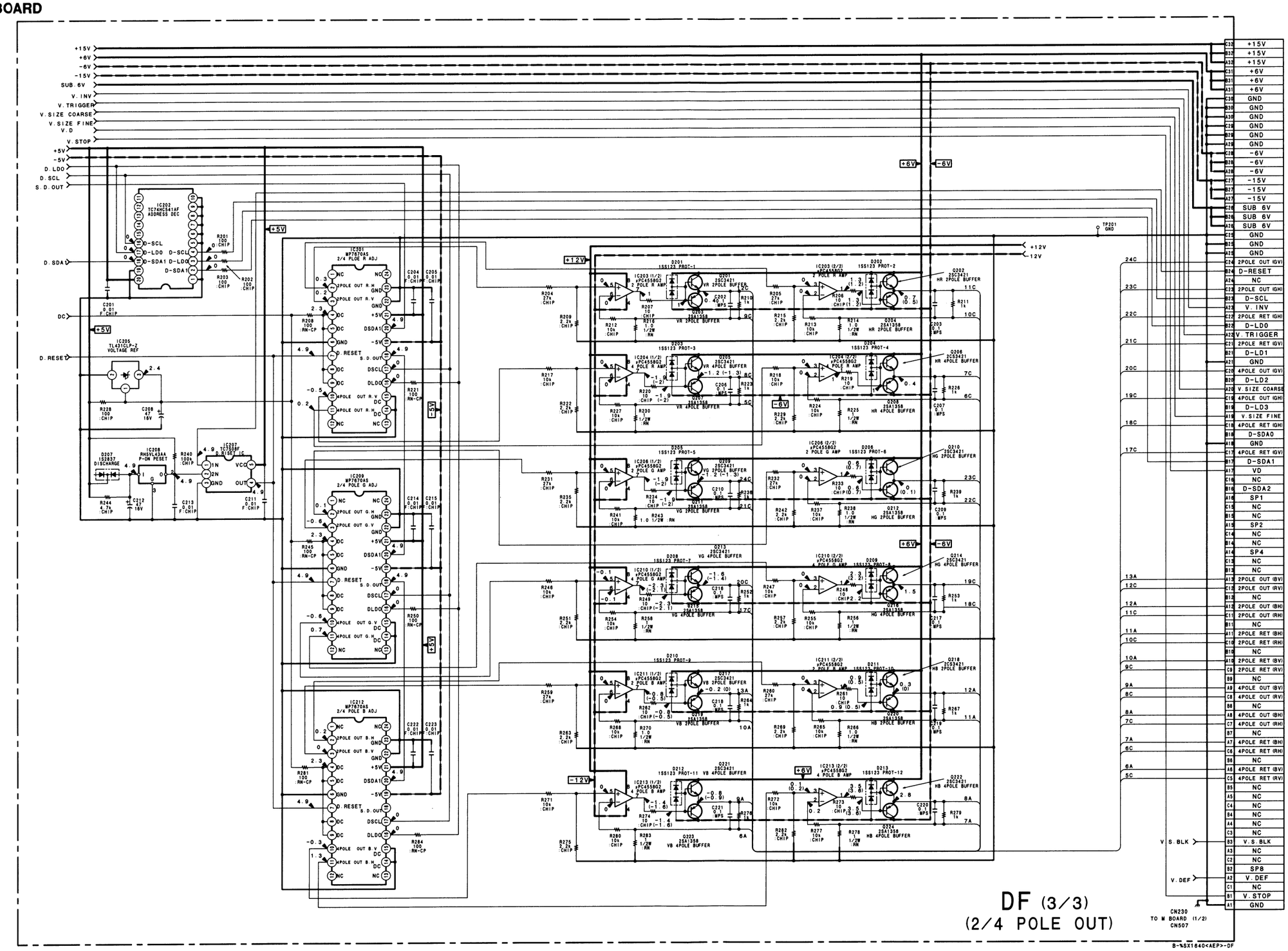
+15V
+6V
-6V
-15V
SUB 6V
V. INV
V. TRIGGER
V. SIZE COARSE
V. SIZE FINE
V. D
V. STOP
+5V
-5V
D. LDO
D. SCL
S. D. OUT
D. SDA
DC
D. RESET
IC202 TC74HC541AF ADDRESS DEC
IC205 TL431CLP-Z VOLTAGE REF
IC208 RH5VL43AA P-ON RESET
IC207 TC7S08F D.RESET IC
IC201 MP7670AS 2/4 POLE R ADJ
IC209 MP7670AS 2/4 POLE G ADJ
IC212 MP7670AS 2/4 POLE B ADJ
+12V
-12V
TP201 GND
CN230 TO M BOARD (1/2) CN507
V. S. BLK
V. DEF
B-%SX1640<AEP>-DF
DF (3/3)
(2/4 POLE OUT)

DF BOARD (1/3) IC3
CXA1470AS

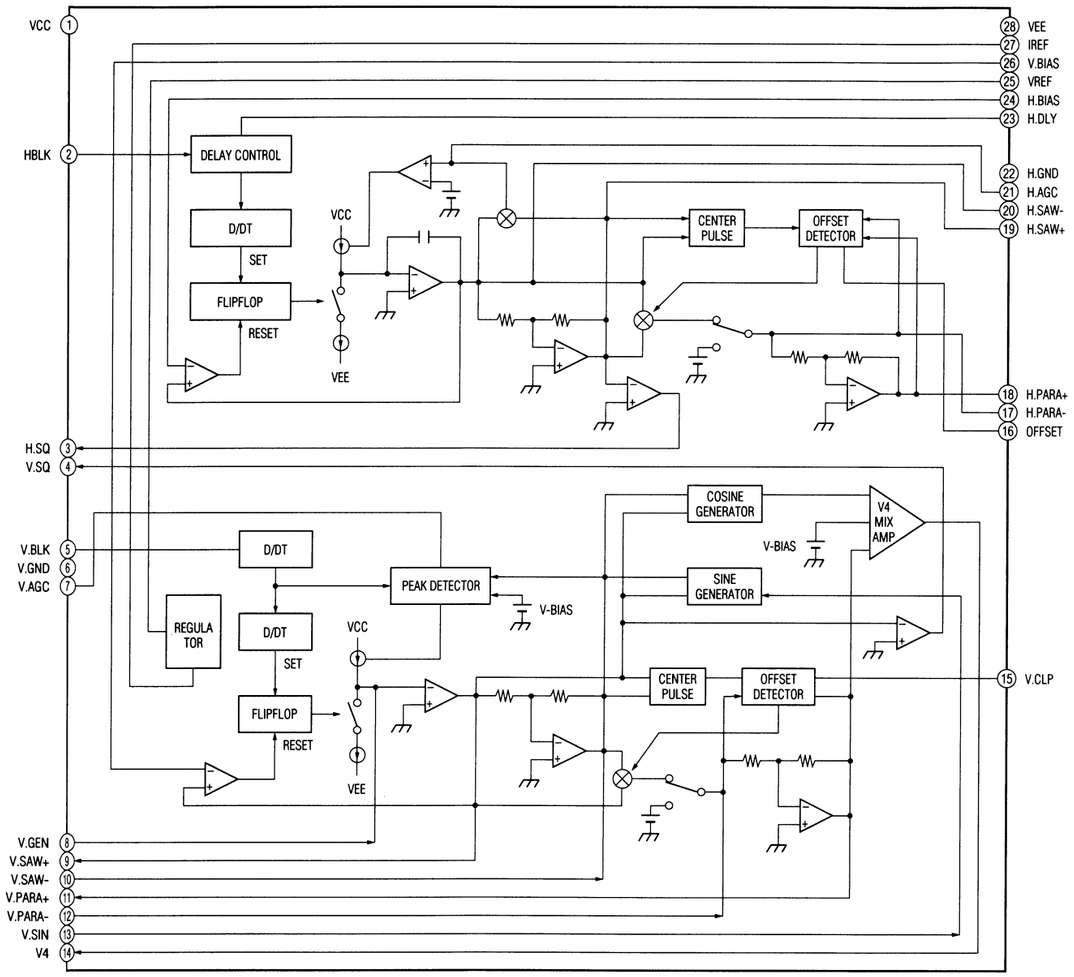

DF BOARD (2/3) IC102, 105, 107
DF BOARD (3/3) IC201, 209, 212
MP7670AS

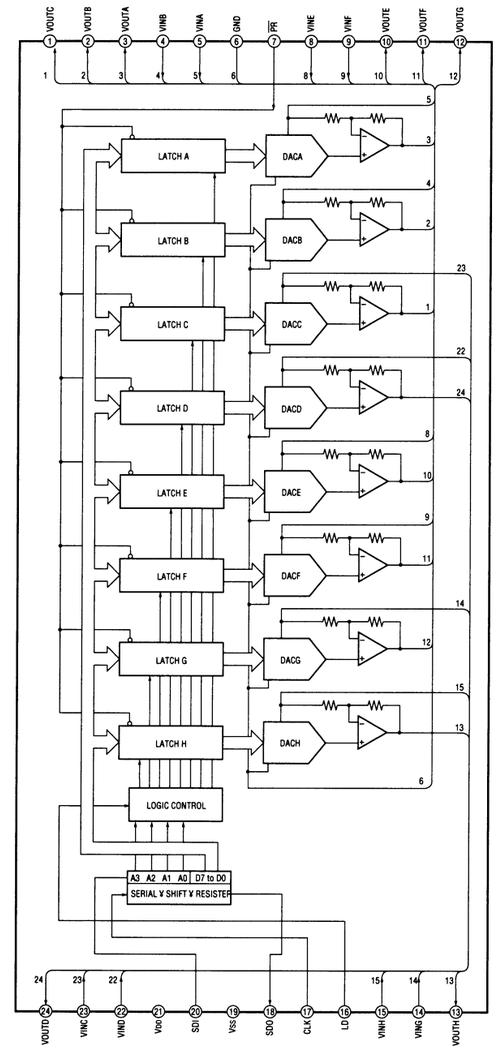

L BOARD

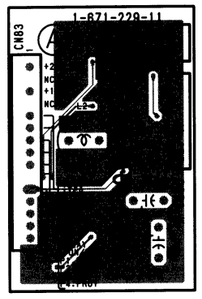

L -A SIDE-
SUFFIX: -11

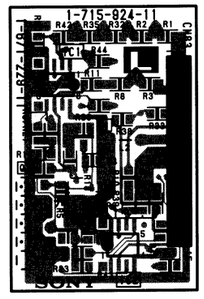

L -B SIDE-
SUFFIX: -11

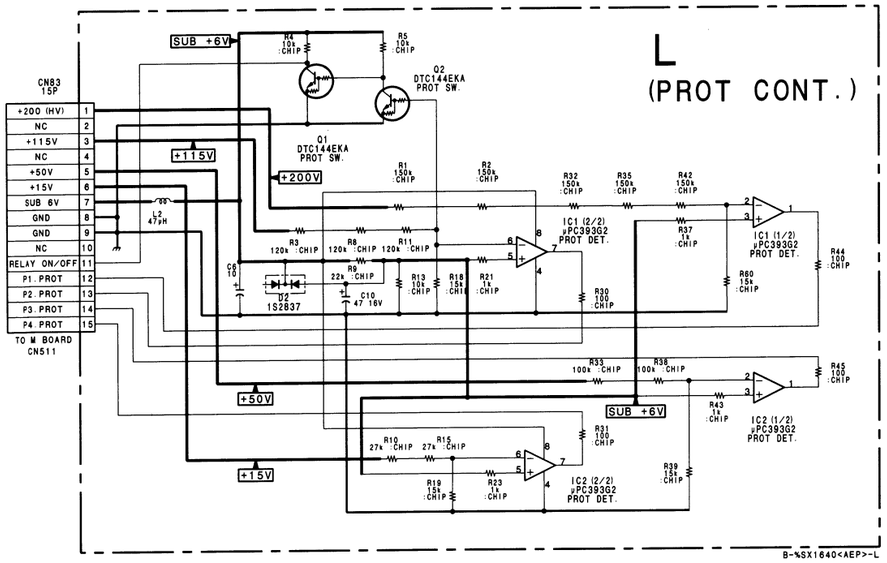

E BOARD

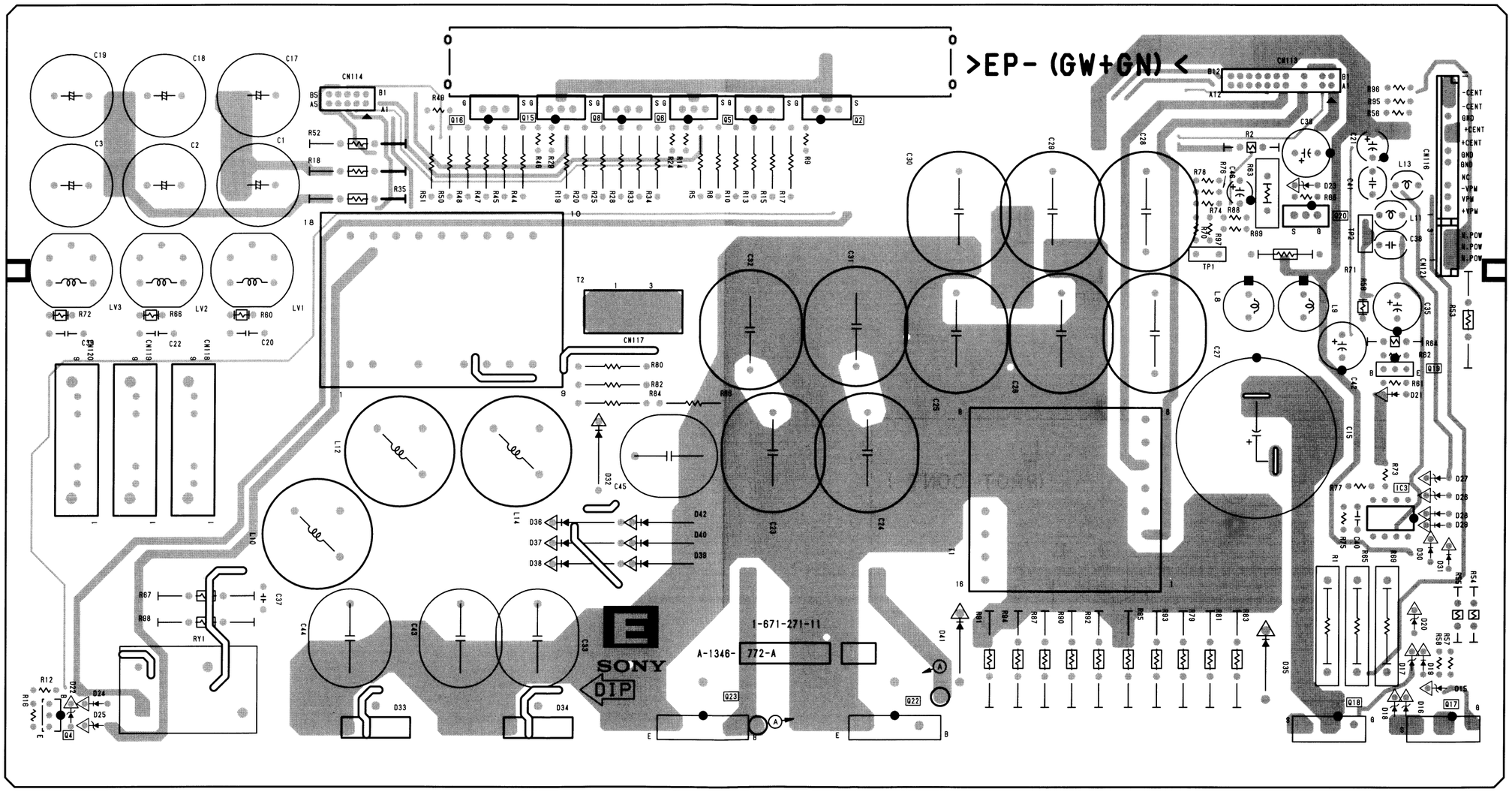

E -A SIDE-
SUFFIX: -11

E BOARD

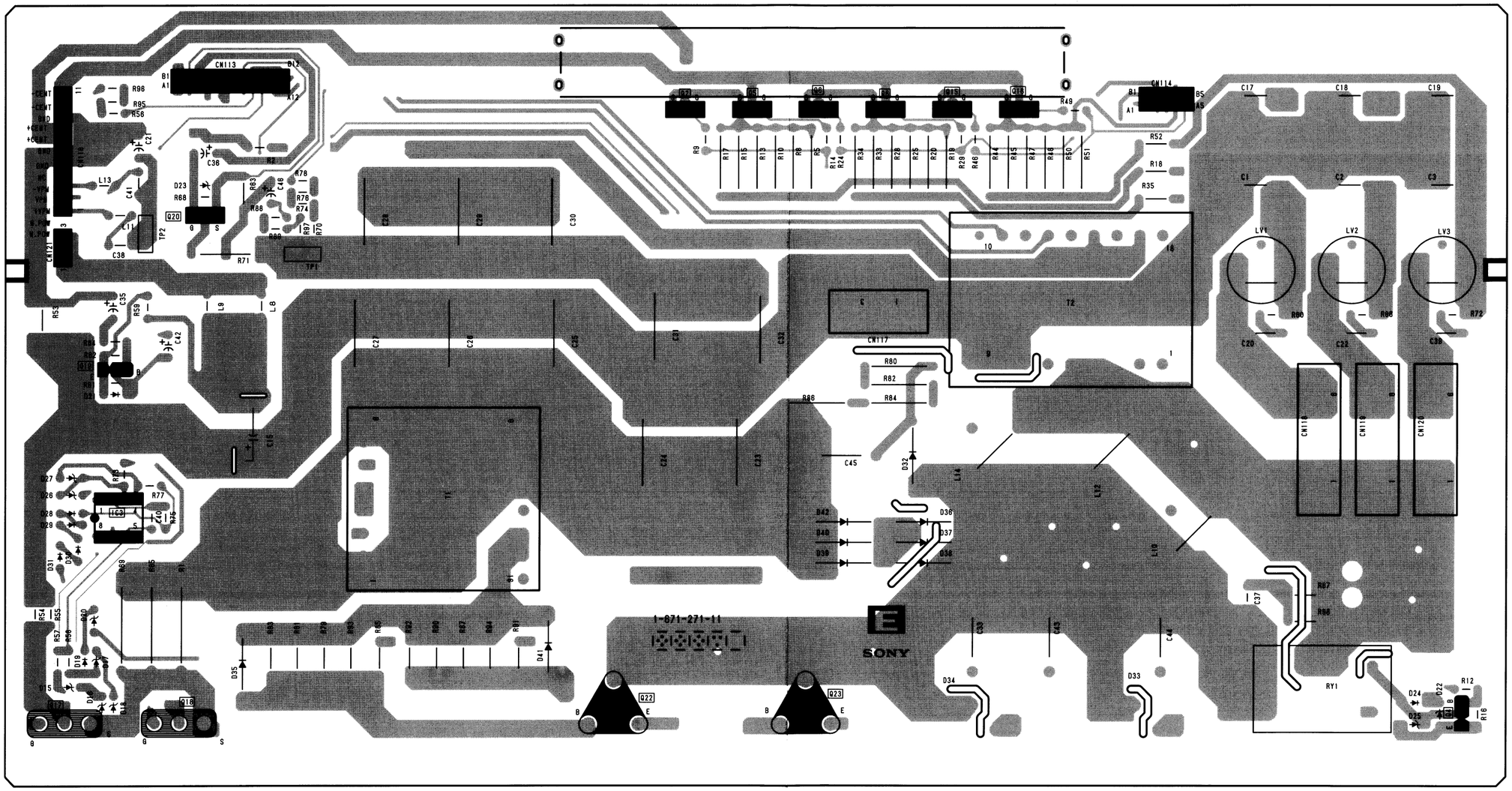

E -B SIDE-
SUFFIX: -11

E BOARD WAVEFORMS

①		②	③
RGB 7.6 V p-p (V)	VIDEO 6.6 V p-p (V)	950 V p-p (H)	91.5 V p-p (H)

E BOARD

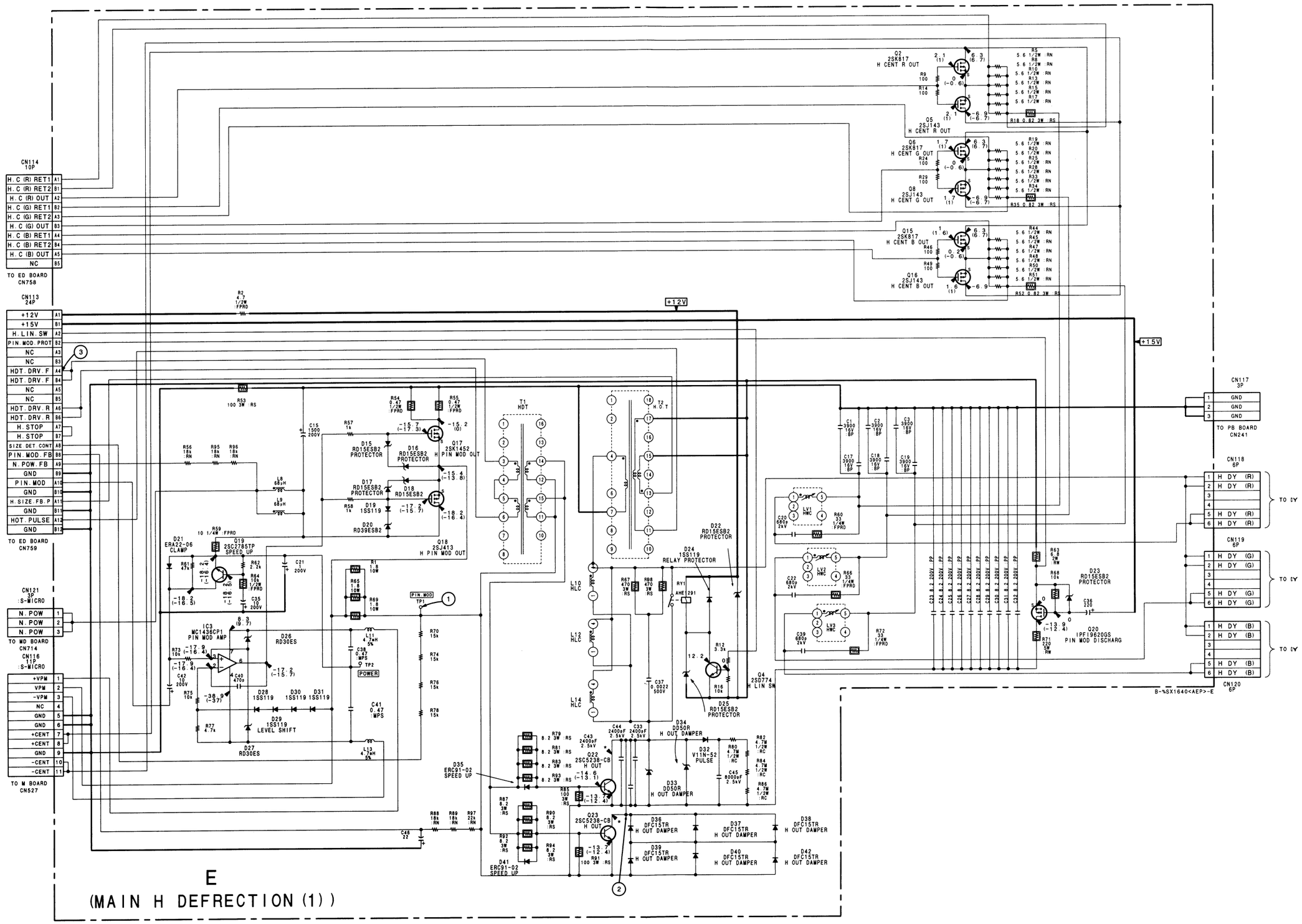
CN114 10P
H.C (R) RET1 A1
H.C (R) RET2 B1
H.C (R) OUT A2
H.C (G) RET1 B2
H.C (G) RET2 A3
H.C (G) OUT B3
H.C (B) RET1 A4
H.C (B) RET2 B4
H.C (B) OUT A5
NC B5
TO ED BOARD CN758
CN113 24P
+12V A1
+15V B1
H.LIN.SW A2
PIN.MOD.PROT B2
NC A3
NC B3
HDT.DRV.F A4
HDT.DRV.F B4
NC A5
NC B5
HDT.DRV.R A6
HDT.DRV.R B6
H.STOP A7
H.STOP B7
SIZE.DET.CONT A8
PIN.MOD.FB B8
N.POW.FB A9
GND B9
PIN.MOD A10
GND B10
H.SIZE.FB.P A11
GND B11
HOT.PULSE A12
GND B12
TO ED BOARD CN759
CN121 3P :S-MICRO
N.POW 1
N.POW 2
N.POW 3
TO MD BOARD CN714
CN116 11P :S-MICRO
+VPM 1
VPM 2
-VPM 3
NC 4
GND 5
GND 6
+CENT 7
+CENT 8
GND 9
-CENT 10
-CENT 11
TO M BOARD CN527
Q2 2SK817 H CENT R OUT
Q5 2SJ143 H CENT R OUT
Q6 2SK817 H CENT G OUT
Q8 2SJ143 H CENT G OUT
Q15 2SK817 H CENT B OUT
Q16 2SJ143 H CENT B OUT
R18 0.82 3W :RS
R35 0.82 3W :RS
R52 0.82 3W :RS
+12V
+15V
R2 4.7 1/2W :FPRD
R53 100 3W :RS
R54 0.47 1/2W :FPRD
R55 0.47 1/2W :FPRD
T1 HDT
T2 H.O.T
Q17 2SK1452 H PIN MOD OUT
D15 RD15ESB2 PROTECTOR
D16 RD15ESB2 PROTECTOR
D17 RD15ESB2 PROTECTOR
D18 RD15ESB2
D19 1SS119
D20 RD39ESB2
Q18 2SJ413 H PIN MOD OUT
D21 ERA22-06 CLAMP
Q19 2SC2785TP SPEED UP
IC3 MC1436CP1 PIN MOD AMP
D26 RD30ES
D27 RD30ES
D28 1SS119
D29 1SS119 LEVEL SHIFT
D30 1SS119
D31 1SS119
PIN MOD TP1
TP2 POWER
D22 RD15ESB2 PROTECTOR
D24 1SS119 RELAY PROTECTOR
RY1 AHE291
Q4 2SD774 H LIN SW
D25 RD15ESB2 PROTECTOR
D23 RD15ESB2 PROTECTOR
Q20 1PF19620GS PIN MOD DISCHARG
D32 V11N-52 PULSE
D33 DD50R H OUT DAMPER
D34 DD50R H OUT DAMPER
Q22 2SC5238-CB H OUT
Q23 2SC5238-CB H OUT
D35 ERC91-02 SPEED UP
D41 ERC91-02 SPEED UP
D36 DFC15TR H OUT DAMPER
D37 DFC15TR H OUT DAMPER
D38 DFC15TR H OUT DAMPER
D39 DFC15TR H OUT DAMPER
D40 DFC15TR H OUT DAMPER
D42 DFC15TR H OUT DAMPER
CN117 3P
GND 1
GND 2
GND 3
TO PB BOARD CN241
CN118 6P
H DY (R)
TO DY
CN119 6P
H DY (G)
TO DY
CN120 6P
H DY (B)
TO DY
B-%SX1640<AEP>-E
E
(MAIN H DEFRECTION (1))

ED BOARD (A SIDE)

D1001 B-1
D1002 C-1
D1003 B-1
D1004 B-3
D1005 B-3
D1006 C-3
D1007 C-5
D1008 B-6
D1009 B-6
D1010 A-6
D1011 B-3
D1012 B-2
D1013 C-5
D1014 C-6
D1015 B-2
D1016 D-2
D1017 B-2
D1018 C-3

IC1001 B-2
IC1002 C-2

Q1001 A-2
Q1003 D-2
Q1007 A-4
Q1009 B-4
Q1010 A-5
Q1011 B-3
Q1012 A-4
Q1013 B-5
Q1014 C-3

ED BOARD

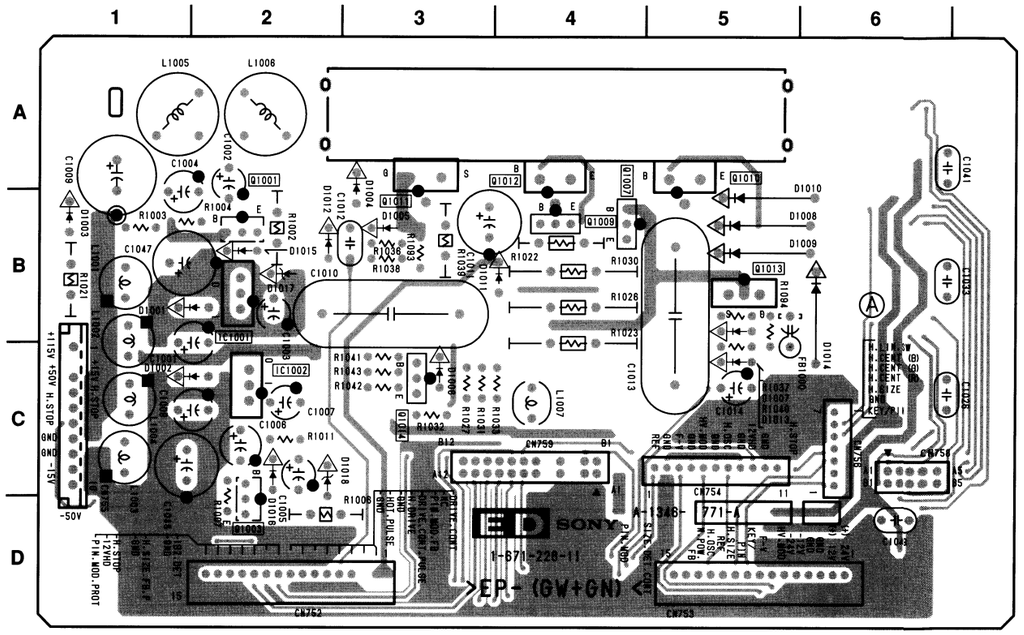

ED -A SIDE-
SUFFIX: -11

ED BOARD (B SIDE)

D1001 B-6
D1002 C-6
D1003 B-6
D1004 A-5
D1005 B-5
D1006 B-4
D1007 B-3
D1008 B-2
D1009 B-2
D1010 A-2
D1011 B-4
D1012 B-5
D1013 C-3
D1014 B-2
D1015 B-6
D1016 C-5
D1017 B-5
D1018 C-5

IC1001 B-5
IC1002 C-5
IC1010 C-1
IC1011 B-1
IC1013 B-1
IC1014 D-1

Q1001 B-6
Q1003 D-5
Q1007 B-3
Q1009 B-3
Q1010 A-2
Q1011 A-4
Q1012 A-3
Q1013 B-2
Q1014 C-5

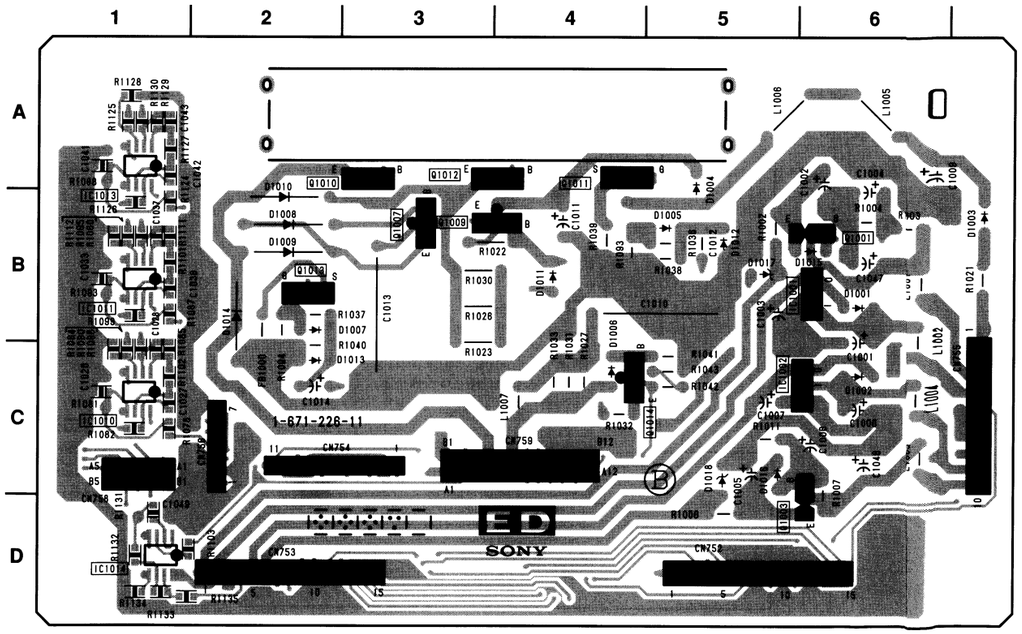

ED -B SIDE-
SUFFIX: -11

ED BOARD

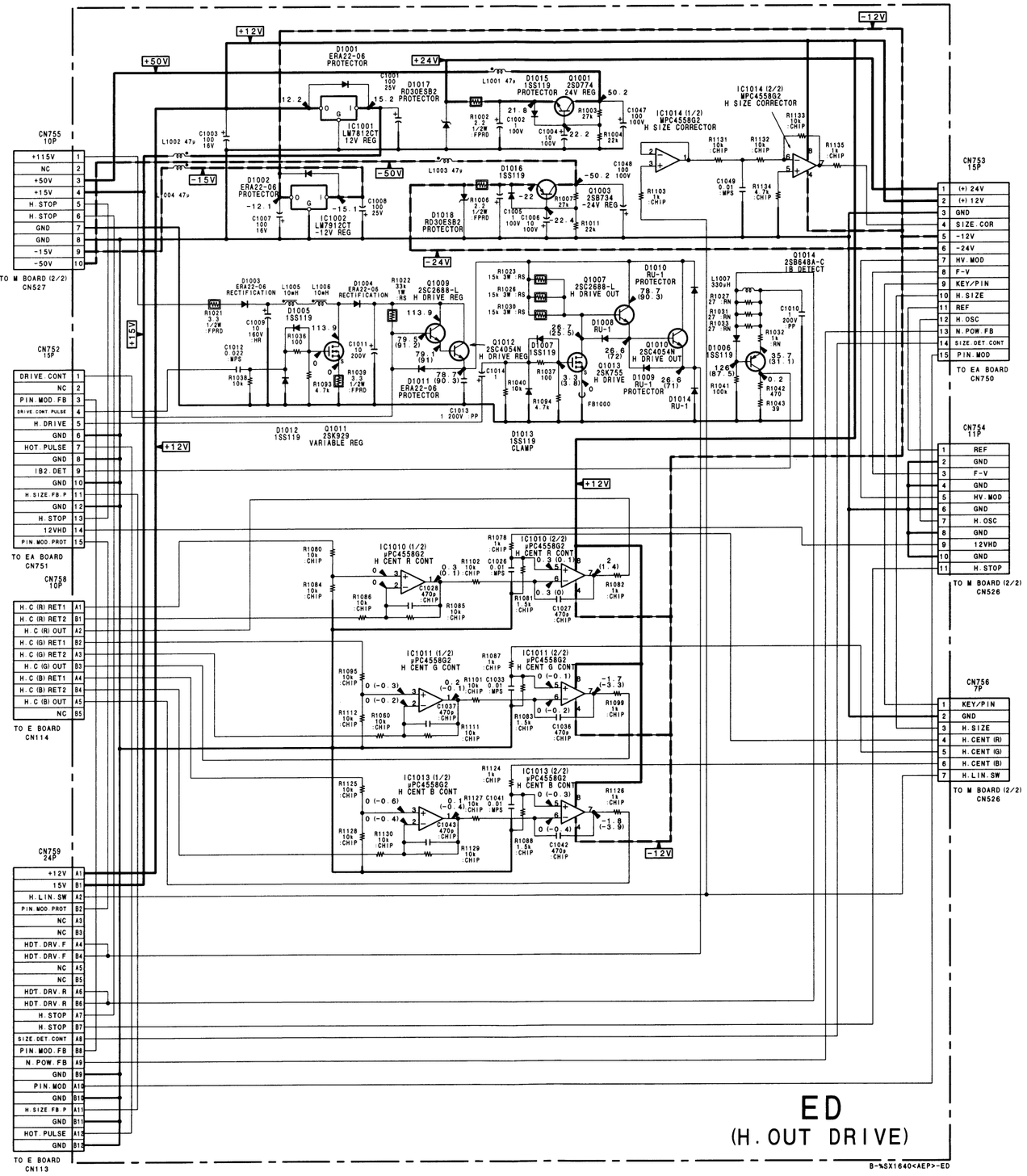
CN755 10P
+115V
NC
+50V
+15V
H.STOP
H.STOP
GND
GND
-15V
-50V
TO M BOARD (2/2) CN527
CN752 15P
DRIVE.CONT
NC
PIN.MOD.FB
DRIVE.CONT.PULSE
H.DRIVE
GND
HOT.PULSE
GND
IB2.DET
GND
H.SIZE.FB.P
GND
H.STOP
12VHD
PIN.MOD.PROT
TO EA BOARD CN751
CN758 10P
H.C (R) RET1
H.C (R) RET2
H.C (R) OUT
H.C (G) RET1
H.C (G) RET2
H.C (G) OUT
H.C (B) RET1
H.C (B) RET2
H.C (B) OUT
NC
TO E BOARD CN114
CN759 24P
+12V
15V
H.LIN.SW
PIN.MOD.PROT
NC
NC
HDT.DRV.F
HDT.DRV.F
NC
NC
HDT.DRV.R
HDT.DRV.R
H.STOP
H.STOP
SIZE.DET.CONT
PIN.MOD.FB
N.POW.FB
GND
PIN.MOD
GND
H.SIZE.FB.P
GND
HOT.PULSE
GND
TO E BOARD CN113
CN753 15P
(+)24V
(+)12V
GND
SIZE.COR
-12V
-24V
HV.MOD
F-V
KEY/PIN
H.SIZE
REF
H.OSC
N.POW.FB
SIZE.DET.CONT
PIN.MOD
TO EA BOARD CN750
CN754 11P
REF
GND
F-V
GND
HV.MOD
GND
H.OSC
GND
12VHD
GND
H.STOP
TO M BOARD (2/2) CN526
CN756 7P
KEY/PIN
GND
H.SIZE
H.CENT (R)
H.CENT (G)
H.CENT (B)
H.LIN.SW
TO M BOARD (2/2) CN526
ED
(H.OUT DRIVE)
B-%SX1640<AEP>-ED

EA BOARD

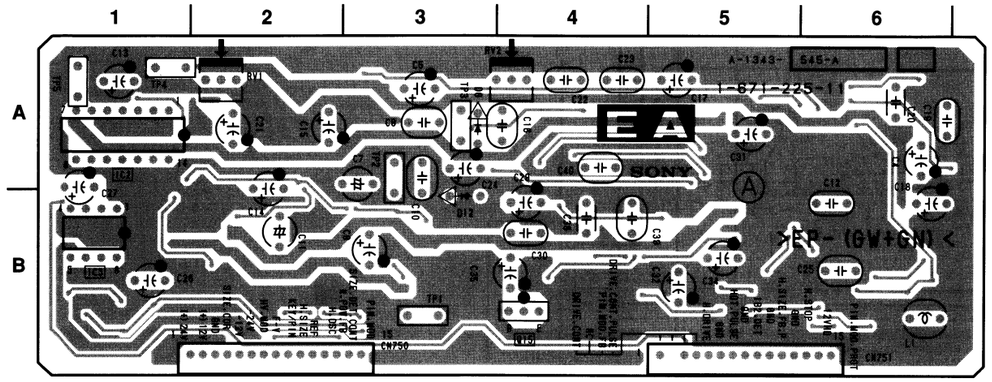

EA -A SIDE-
SUFFIX: -11

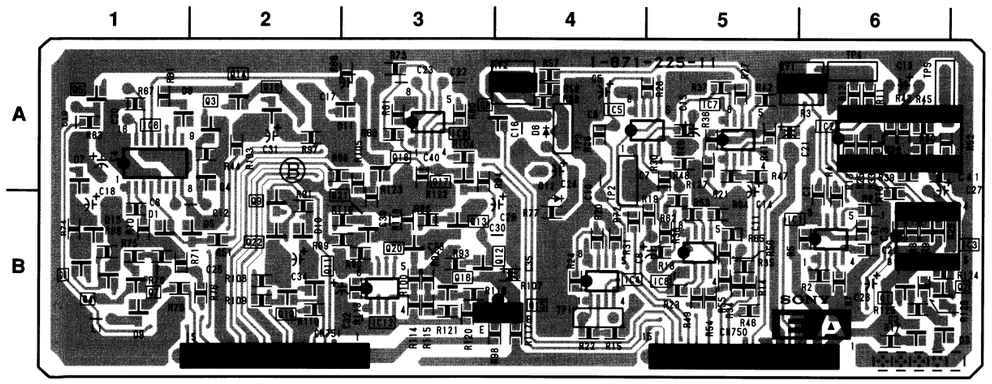

EA -B SIDE-
SUFFIX: -11

EA BOARD (A SIDE)

D6	A-3
D12	B-3
IC2	A-1
IC3	B-1
Q15	B-4
TP1	B-3
TP2	A-3
TP3	A-3
TP4	A-1
TP5	A-1

EA BOARD WAVEFORMS

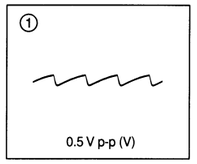

EA BOARD (B SIDE)

D1	B-1
D4	A-2
D5	B-2
D6	A-4
D7	A-1
D8	A-1
D9	B-1
D10	B-2
D11	A-3
D12	A-4
D13	B-1
IC1	B-5
IC2	A-6
IC3	B-6
IC4	B-4
IC5	A-4
IC6	A-1
IC7	A-5
IC8	B-5
IC9	A-3
IC12	B-3
Q1	B-6
Q2	B-6
Q3	A-2
Q4	B-1
Q5	A-1
Q6	B-1
Q7	B-1
Q8	A-3
Q9	B-2
Q10	A-2
Q11	B-2
Q12	B-4
Q13	B-3
Q14	A-2
Q15	B-4
Q16	B-3
Q17	A-3
Q18	A-3
Q19	B-2
Q20	B-3
Q21	B-2
Q22	B-2
TP1	B-4
TP2	B-4
TP3	A-4
TP4	A-6
TP5	A-6

EA BOARD

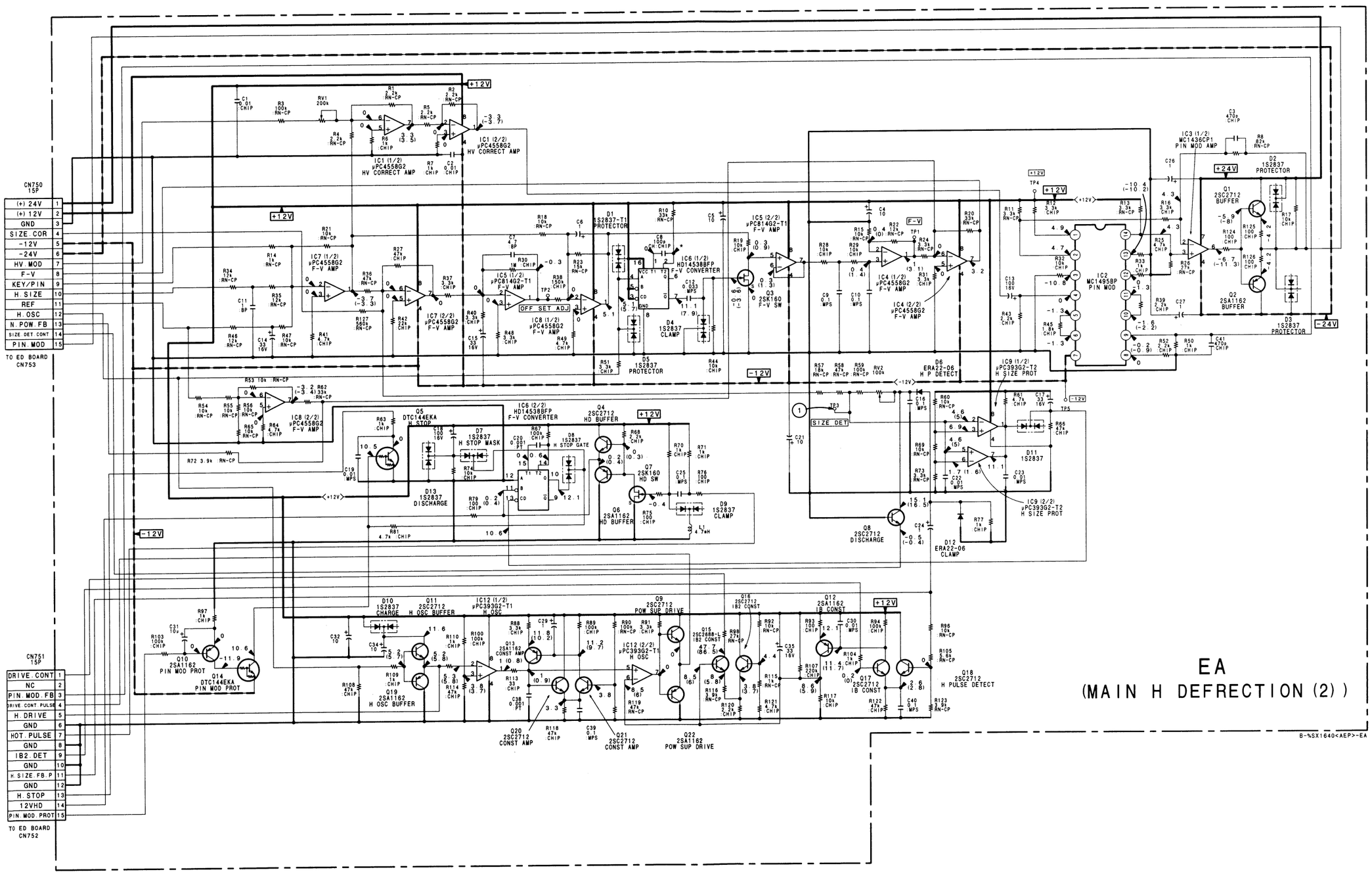
CN750 15P
(+) 24V
(+) 12V
GND
SIZE COR
-12V
-24V
HV MOD
F-V
KEY/PIN
H SIZE
REF
H OSC
N POW FB
SIZE DET CONT
PIN MOD
TO ED BOARD CN753
CN751 15P
DRIVE CONT
NC
PIN MOD FB
DRIVE CONT PULSE
H DRIVE
GND
HOT PULSE
GND
IB2 DET
GND
H SIZE FB P
GND
H STOP
12VHD
PIN MOD PROT
TO ED BOARD CN752
IC1 (1/2) μPC4558G2 HV CORRECT AMP
IC1 (2/2) μPC4558G2 HV CORRECT AMP
IC7 (1/2) μPC4558G2 F-V AMP
IC7 (2/2) μPC4558G2 F-V AMP
IC8 (1/2) μPC4558G2 F-V AMP
IC8 (2/2) μPC4558G2 F-V AMP
IC5 (1/2) μPC814G2-T1 F-V AMP
IC5 (2/2) μPC814G2-T1 F-V AMP
IC6 (1/2) HD14538BFP F-V CONVERTER
IC6 (2/2) HD14538BFP F-V CONVERTER
IC4 (1/2) μPC4558G2 F-V AMP
IC4 (2/2) μPC4558G2 F-V AMP
IC3 (1/2) MC1436CP1 PIN MOD AMP
IC2 MC1495BP PIN MOD
IC9 (1/2) μPC393G2-T2 H SIZE PROT
IC9 (2/2) μPC393G2-T2 H SIZE PROT
IC12 (1/2) μPC393G2-T1 H OSC
IC12 (2/2) μPC393G2-T1 H OSC
D1 1S2837-T1 PROTECTOR
D2 1S2837 PROTECTOR
D3 1S2837 PROTECTOR
D4 1S2837 CLAMP
D5 1S2837 PROTECTOR
D6 ERA22-06 H P DETECT
D7 1S2837 H STOP MASK
D8 1S2837 H STOP GATE
D9 1S2837 CLAMP
D10 1S2837 CHARGE
D11 1S2837
D12 ERA22-06 CLAMP
D13 1S2837 DISCHARGE
Q1 2SC2712 BUFFER
Q2 2SA1162 BUFFER
Q3 2SK160 F-V SW
Q4 2SC2712 HD BUFFER
Q5 DTC144EKA H STOP
Q6 2SA1162 HD BUFFER
Q7 2SK160 HD SW
Q8 2SC2712 DISCHARGE
Q9 2SC2712 POW SUP DRIVE
Q10 2SA1162 PIN MOD PROT
Q11 2SC2712 H OSC BUFFER
Q12 2SA1162 IB CONST
Q13 2SA1162 CONST AMP
Q14 DTC144EKA PIN MOD PROT
Q15 2SC2688-L IB2 CONST
Q16 2SC2712 IB2 CONST
Q17 2SC2712 IB CONST
Q18 2SC2712 H PULSE DETECT
Q19 2SA1162 H OSC BUFFER
Q20 2SC2712 CONST AMP
Q21 2SC2712 CONST AMP
Q22 2SA1162 POW SUP DRIVE
OFF SET ADJ
SIZE DET
EA
(MAIN H DEFRECTION (2))
B-%SX1640<AEP>-EA

PA BOARD (A SIDE)

D1	H-8	TP102	I-10
D2	H-10	TP103	J-7
D3	H-8	TP150	I-6
D100	I-10	TP151	I-6
D101	I-9	TP152	H-6
D103	I-6	TP250	J-8
D105	I-8	TP251	J-9
D120	J-7	TP252	J-9
D140	J-6	TP253	J-9
D150	I-5	TP300	I-2
D151	H-6	TP600	F-10
D152	H-6	TP601	F-10
D200	I-3		
D201	I-3		
D202	I-4		
D250	J-5		
D251	I-10		
D252	I-5		
D253	I-5		
D254	H-5		
D300	I-3		
D301	I-3		
D500	I-1		
D600	C-5		
D601	C-6		
D602	C-6		
D603	C-4		
D604	C-4		
D605	C-4		
D606	B-2		
D607	C-2		
D608	C-2		
D609	C-9		
D610	C-8		
IC1	H-9		
IC2	H-9		
IC100	I-10		
IC101	J-8		
IC102	J-8		
IC150	I-5		
IC151	I-6		
IC152	I-8		
IC153	I-7		
IC154	H-6		
IC200	H-4		
IC250	J-6		
IC251	J-5		
IC300	I-3		
IC301	J-2		
IC302	J-3		
IC500	I-2		
Q10	H-8		
Q11	H-8		
Q100	I-9		
Q150	I-9		
Q151	I-9		
Q152	I-7		
Q153	I-7		
Q154	I-6		
Q155	H-6		
Q200	H-3		
Q201	H-4		
Q202	I-4		
Q203	I-4		
Q204	I-4		
Q250	H-10		
Q251	I-6		
Q252	H-5		
Q253	H-5		
Q500	I-1		
Q501	I-1		
Q502	H-1		
Q503	H-2		
Q504	H-2		
Q505	H-1		
Q506	H-2		
Q507	H-1		
Q508	H-1		
Q600	C-7		
Q601	C-5		
Q602	C-3		
RV100	I-10		
RV101	J-9		
RV150	I-9		
RV250	J-10		
TP1	H-8		
TP2	H-8		
TP3	H-9		
TP100	J-10		
TP101	I-10		

PA BOARD

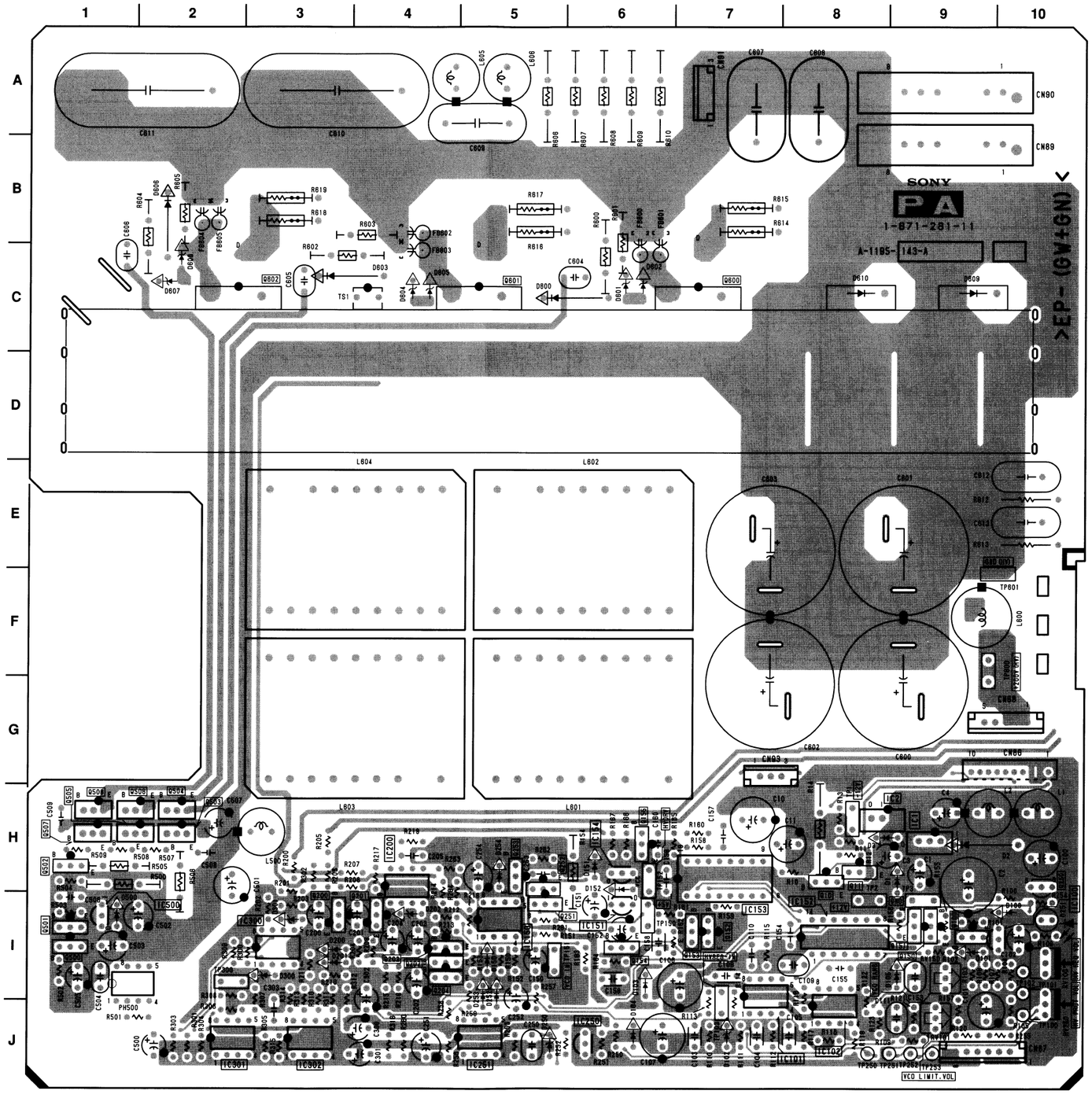

PA -A SIDE-
SUFFIX: -11

PA BOARD

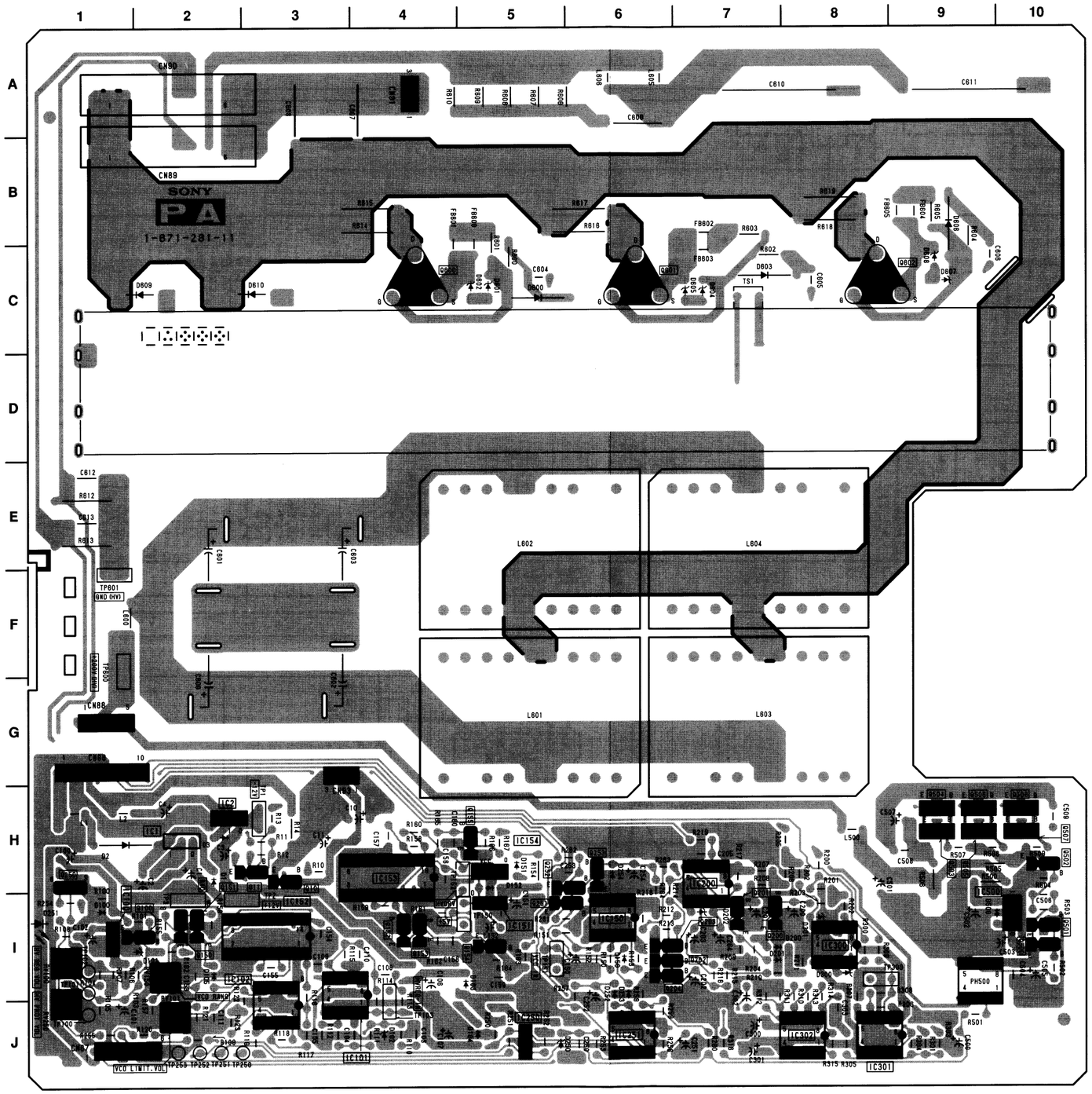

PA -B SIDE-
SUFFIX: -11

PA BOARD (B SIDE)

D1	H-2	TP102	I-1
D2	H-1	TP103	J-4
D3	H-2	TP150	I-5
D100	I-1	TP151	I-5
D101	I-2	TP152	H-4
D102	J-4	TP250	J-3
D103	I-5	TP251	J-2
D104	J-5	TP252	J-2
D105	I-2	TP253	J-2
D150	I-6	TP300	I-9
D151	H-5	TP600	F-1
D152	H-5	TP601	F-1
D200	I-8		
D201	I-7		
D202	I-7		
D250	J-6		
D251	I-1		
D252	I-6		
D253	I-6		
D254	H-6		
D300	I-8		
D301	I-8		
D500	I-9		
D600	C-5		
D601	C-5		
D602	C-5		
D603	C-7		
D604	C-7		
D605	C-7		
D606	B-9		
D607	C-9		
D608	C-9		
D609	C-2		
D610	C-3		
IC1	H-1		
IC2	H-1		
IC100	I-1		
IC101	J-4		
IC102	I-2		
IC150	I-6		
IC151	I-5		
IC152	I-3		
IC153	H-4		
IC154	H-5		
IC200	H-7		
IC250	J-5		
IC251	J-6		
IC300	I-8		
IC301	J-8		
IC302	J-8		
IC500	H-9		
Q10	H-3		
Q11	H-3		
Q100	I-2		
Q150	I-2		
Q151	H-2		
Q152	I-4		
Q153	I-4		
Q154	I-5		
Q155	H-5		
Q200	I-7		
Q201	H-7		
Q202	I-7		
Q203	I-7		
Q204	I-6		
Q250	H-1		
Q251	I-5		
Q252	H-5		
Q253	H-6		
Q500	I-10		
Q501	I-10		
Q502	H-10		
Q503	H-9		
Q504	H-9		
Q505	H-9		
Q506	H-9		
Q507	H-10		
Q508	H-10		
Q600	C-4		
Q601	C-6		
Q602	C-9		
RV100	I-1		
RV101	I-2		
RV150	I-2		
RV250	J-1		
TP1	H-3		
TP2	H-3		
TP3	I-2		
TP100	J-1		
TP101	I-1		

PA (1/2) BOARD

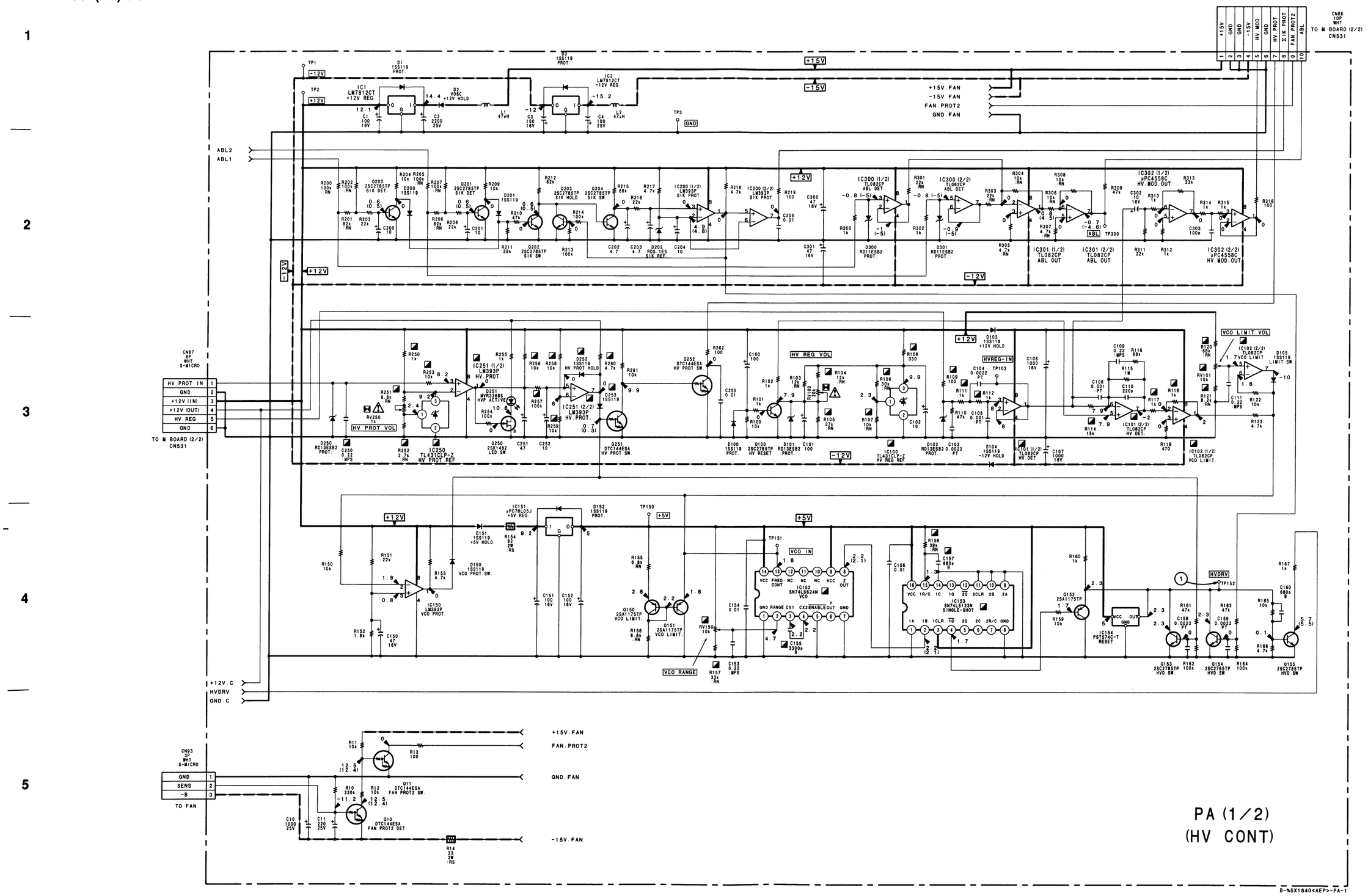
CN86 10P WHT TO M BOARD (2/2) CN531
+15V
GND
GND
-15V
HV MOD
GND
HV PROT
Σ1K PROT
FAN PROT2
ABL
+15V. FAN
-15V. FAN
FAN. PROT2
GND. FAN
ABL2
ABL1
CN87 6P WHT S-MICRO
HV PROT IN
GND
+12V (IN)
+12V (OUT)
HV. REG
GND
TO M BOARD (2/2) CN531
HV PROT VOL
HV REG VOL
VCO LIMIT. VOL
HVREG-IN
VCO IN
VCO RANGE
HVDRV
+12V. C
HVDRV
GND. C
CN83 3P WHT S-MICRO
GND
SENS
-B
TO FAN
+15V. FAN
FAN. PROT2
GND. FAN
-15V. FAN
PA (1/2)
(HV CONT)
B-%SX1640<AEP>-PA-1

PA (2/2) BOARD

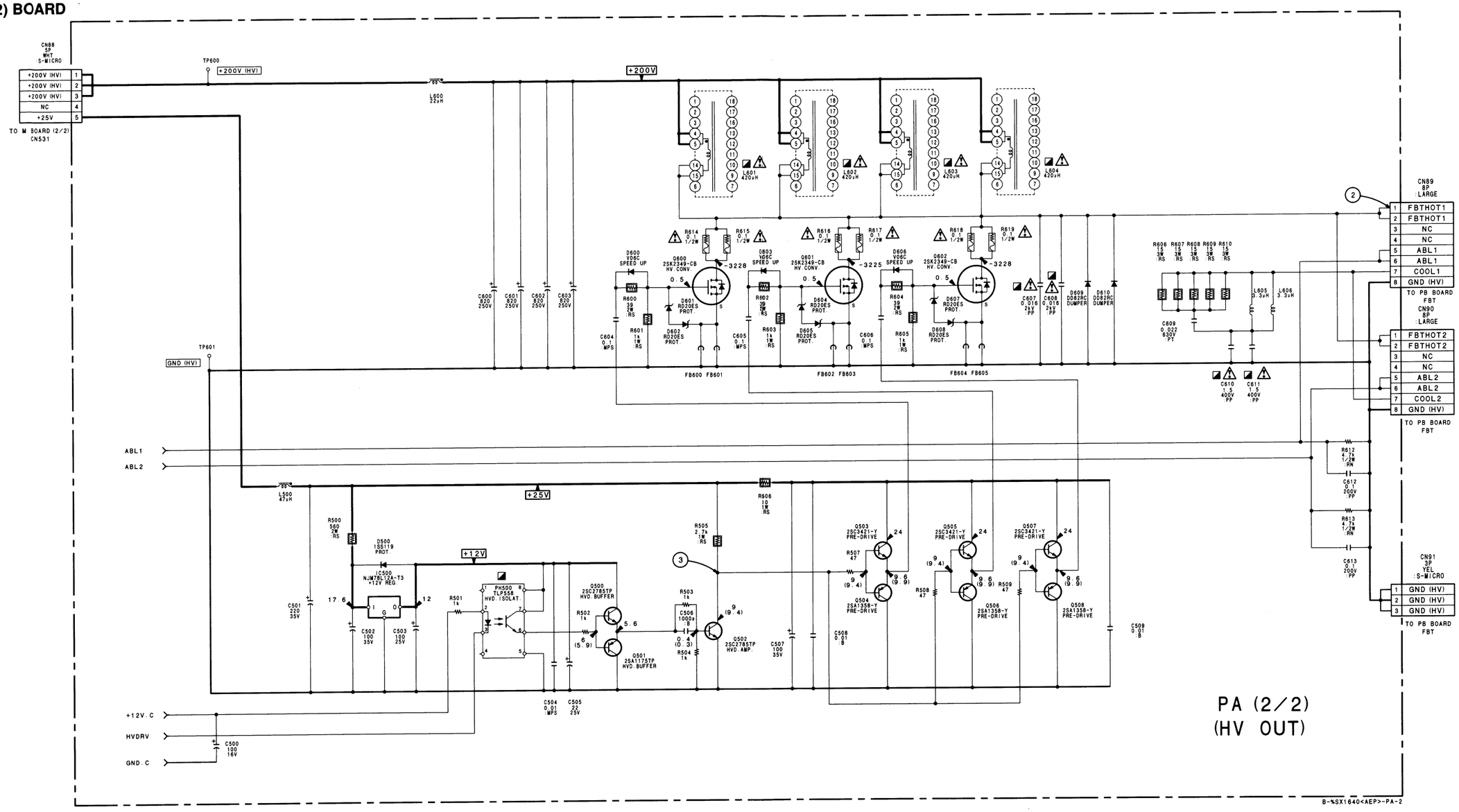

PA BOARD WAVEFORMS

①	②	③
3.8 V p-p (V)	875.0 V p-p (H)	233.0 V p-p (H)

PB BOARD

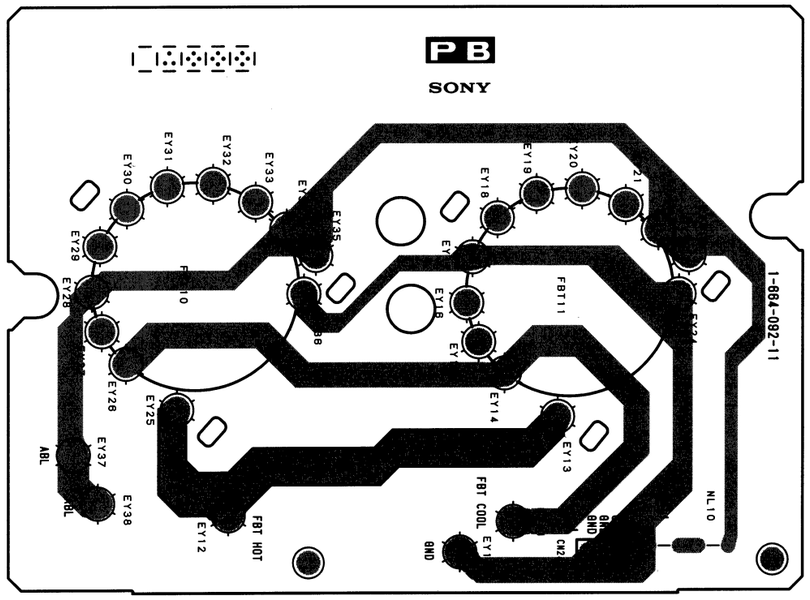

PB -B SIDE-
SUFFIX: -11

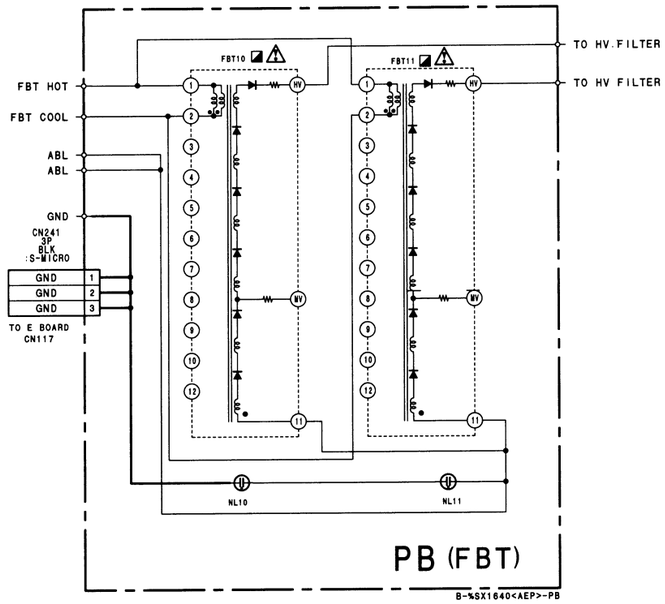

PD, NB BOARD

PD BOARD (A SIDE)

D500	E-2
D501	F-2
D520	F-5
D521	G-5
D523	F-5
D527	A-3
D528	D-4
D529	E-4
D530	E-4
D531	G-4
IC500	E-2
IC502	F-2
IC503	F-3
IC506	E-3
IC507	E-4
Q501	E-2
Q506	G-3
Q512	G-4
Q517	G-4
Q518	G-2
Q520	G-5
Q523	G-3
Q525	D-4
Q526	D-4
Q527	E-3
Q528	D-5
Q529	E-5
Q530	E-5
TP500	F-4
TP501	F-2
TP503	G-2
TP504	G-3
TP505	A-2

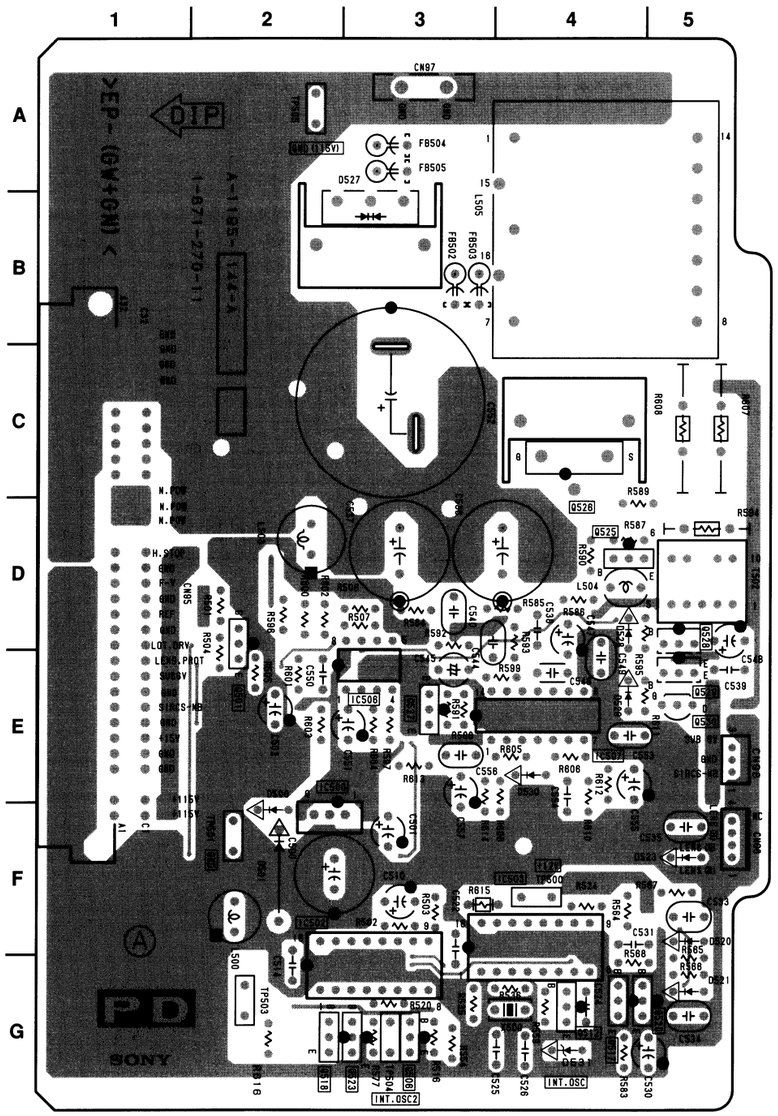

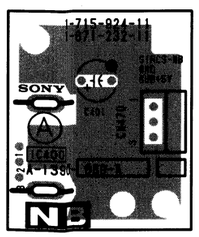

NB -A SIDE-
SUFFIX: -11

PD -A SIDE-
SUFFIX: -11

PD BOARD (B SIDE)

D500	E-2
D500	E-4
D501	F-4
D520	F-1
D521	G-1
D523	F-1
D527	A-3
D528	D-2
D529	E-2
D530	E-2
D531	G-2
IC500	E-3
IC502	G-3
IC503	F-2
IC506	E-3
IC507	E-2
Q501	E-4
Q506	G-3
Q512	G-2
Q517	G-2
Q518	G-3
Q520	G-1
Q523	G-3
Q525	D-1
Q526	D-2
Q527	E-3
Q528	D-1
Q529	E-1
Q530	E-1
TP500	F-2
TP501	F-4
TP503	G-4
TP504	G-3
TP505	A-4

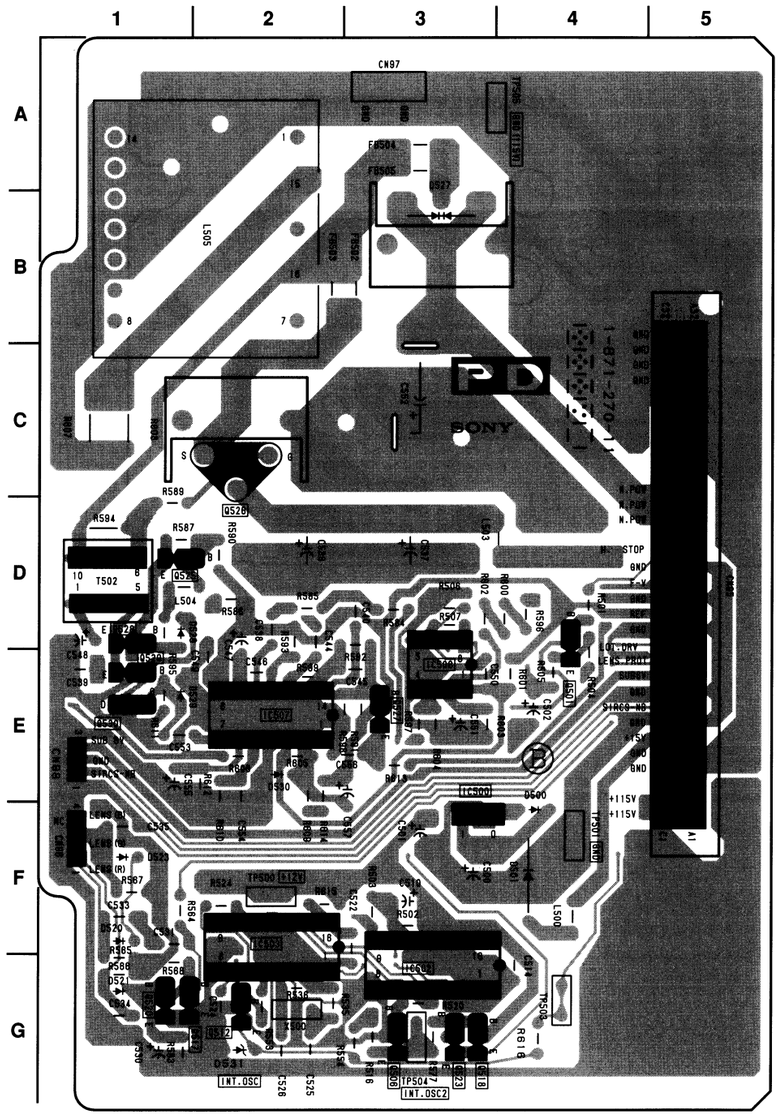

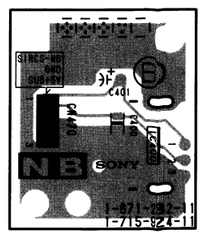

PD -B SIDE-
SUFFIX: -11

NB -B SIDE-
SUFFIX: -11

PD, NB BOARD

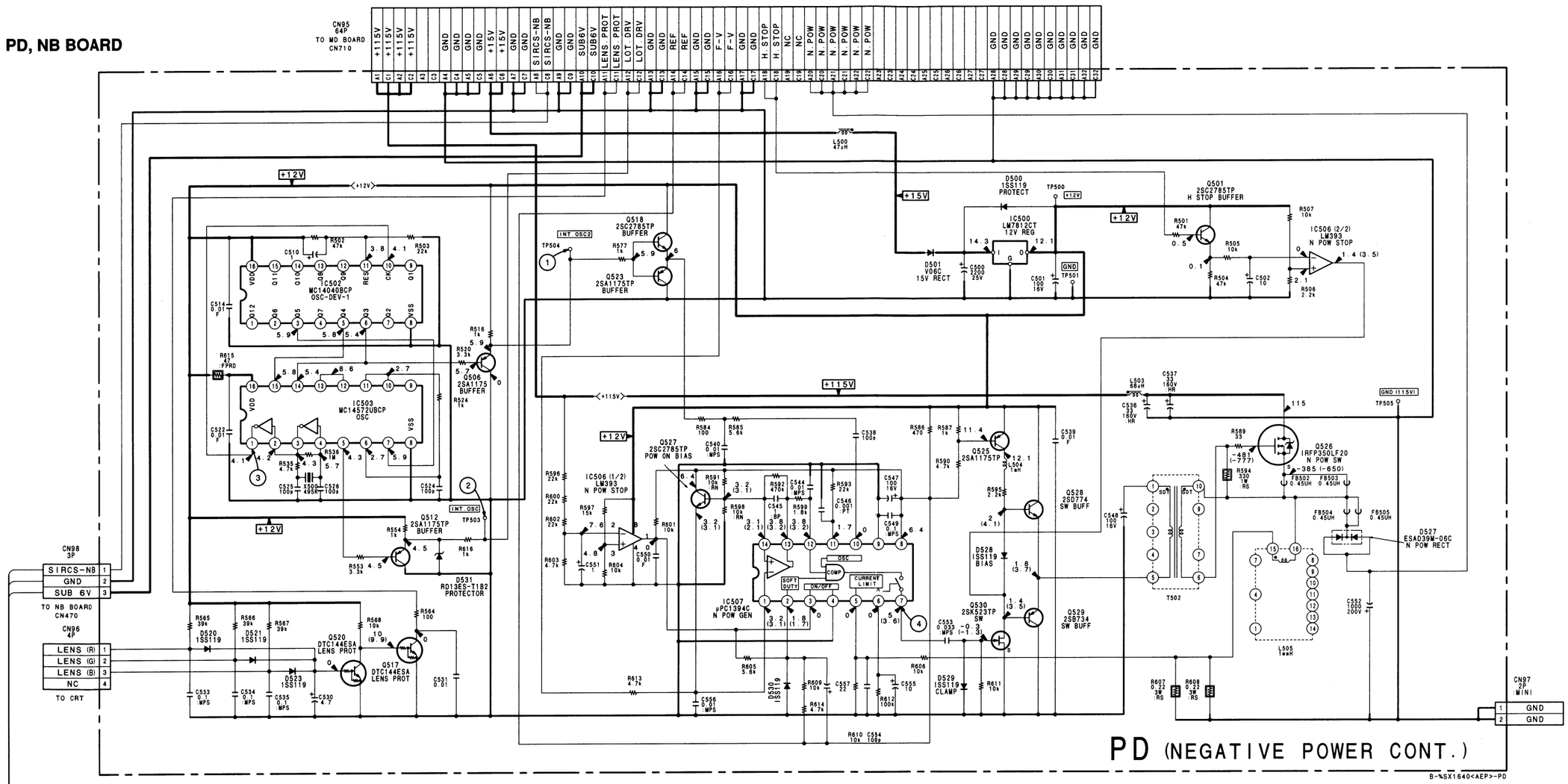

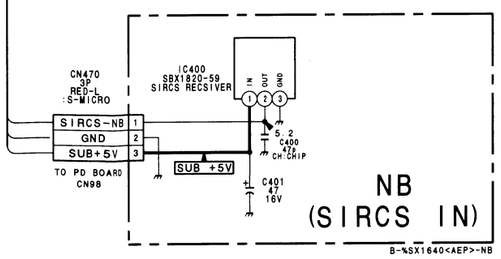

PD BOARD IC502
MC14040BCP

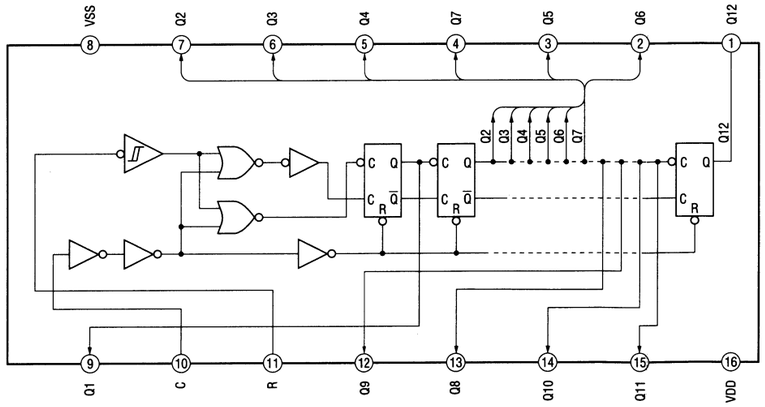

PD BOARD WAVEFORMS

①	②	③	④	
11.0 V p-p (H)	10.0 V p-p (H)	12.0 V p-p (H)	RGB 5.4 V p-p (H)	VIDEO 5.7 V p-p (H)

PE BOARD

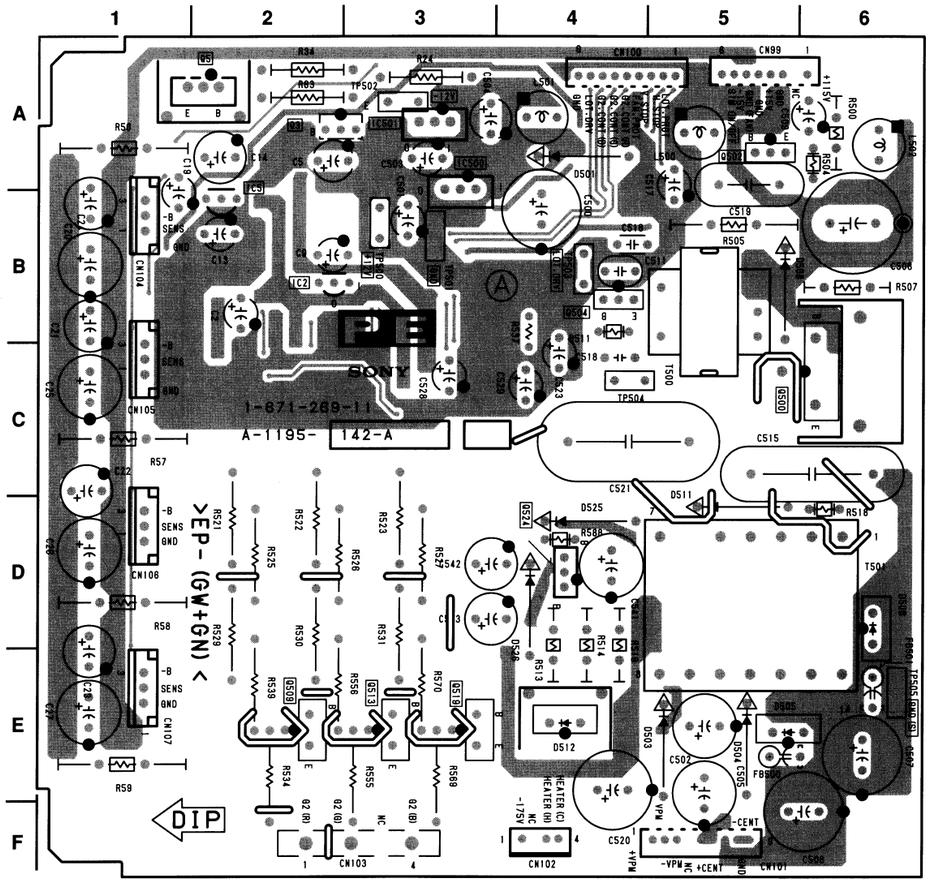

PE BOARD (A SIDE)

PE -A SIDE-
SUFFIX: -11

D503	E-5	TP500	B-3
D501	A-4	TP501	B-3
D503	E-5	TP502	A-3
D504	E-5	TP503	B-4
D505	E-5	TP504	C-4
D506	D-6	TP505	E-6
D508	B-5		
D511	C-5		
D512	E-4		
D525	D-4		
D526	D-4		
IC2	B-2		
IC5	A-2		
IC500	A-3		
IC501	A-3		
Q3	A-2		
Q5	A-2		
Q500	C-5		
Q502	A-5		
Q504	B-4		
Q509	E-2		
Q513	E-3		
Q519	E-3		
Q524	D-4		

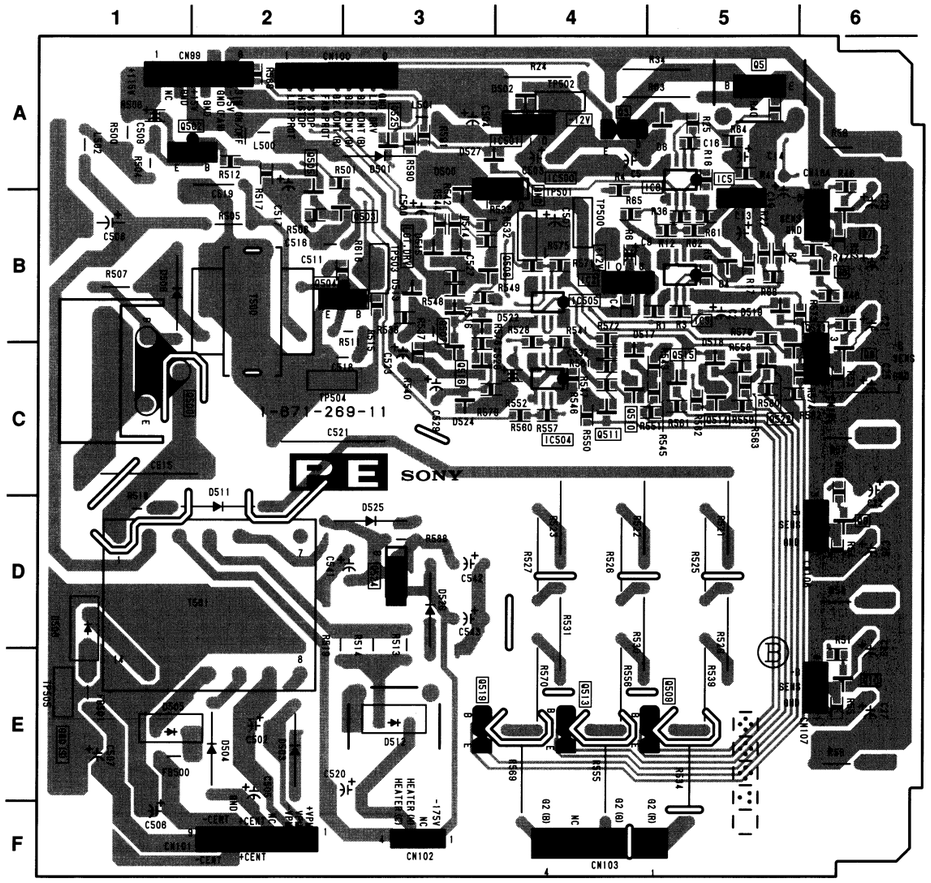

PE BOARD (B SIDE)

PE -B SIDE-
SUFFIX: -11

D500	E-2	IC6	A-5	Q522	C-5
D4	B-5	IC500	A-4	Q524	D-3
D6	A-5	IC501	A-4	Q525	A-3
D500	A-3	IC504	C-4		
D501	A-3	IC505	B-4	TP500	B-4
D502	A-4			TP501	B-4
D503	E-2	Q3	A-4	TP502	A-4
D504	E-2	Q5	A-5	TP503	B-3
D505	E-1	Q6	B-6	TP504	C-2
D506	D-1	Q7	B-6	TP505	E-1
D508	B-1	Q8	C-6		
D511	C-2	Q9	D-6		
D512	E-3	Q10	E-6		
D513	B-3	Q500	C-1		
D514	B-3	Q502	A-1		
D515	B-3	Q503	B-3		
D516	B-3	Q504	B-2		
D517	B-4	Q505	A-2		
D518	B-5	Q507	B-3		
D519	B-5	Q508	B-4		
D522	B-4	Q509	E-5		
D524	C-3	Q510	C-4		
D525	D-3	Q511	C-4		
D526	D-3	Q513	E-4		
D527	A-3	Q514	C-5		
		Q515	C-5		
IC2	B-4	Q516	C-3		
IC3	B-5	Q519	E-3		
IC5	A-5	Q521	B-6		

PE BOARD

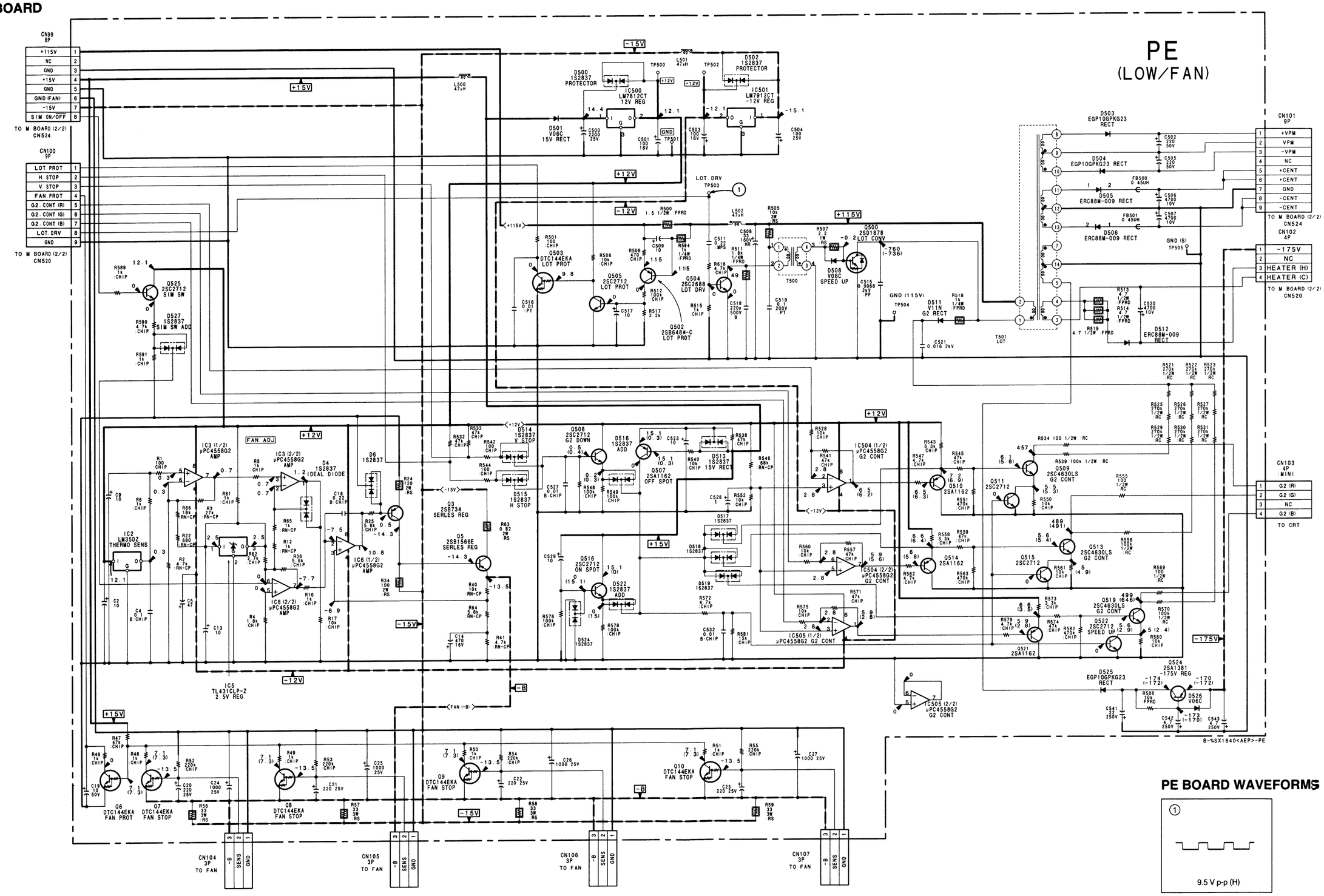

PE BOARD WAVEFORMS

EBA BOARD

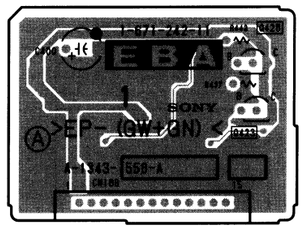

EBA -A SIDE-
SUFFIX: -11

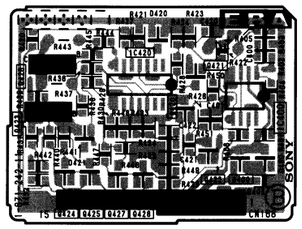

EBA -B SIDE-
SUFFIX: -11

EBC BOARD

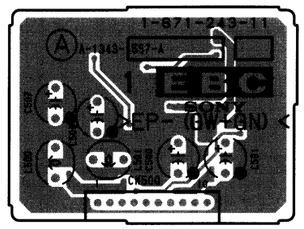

EBC -A SIDE-
SUFFIX: -11

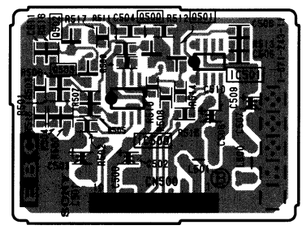

EBC -B SIDE-
SUFFIX: -11

EBA BOARD

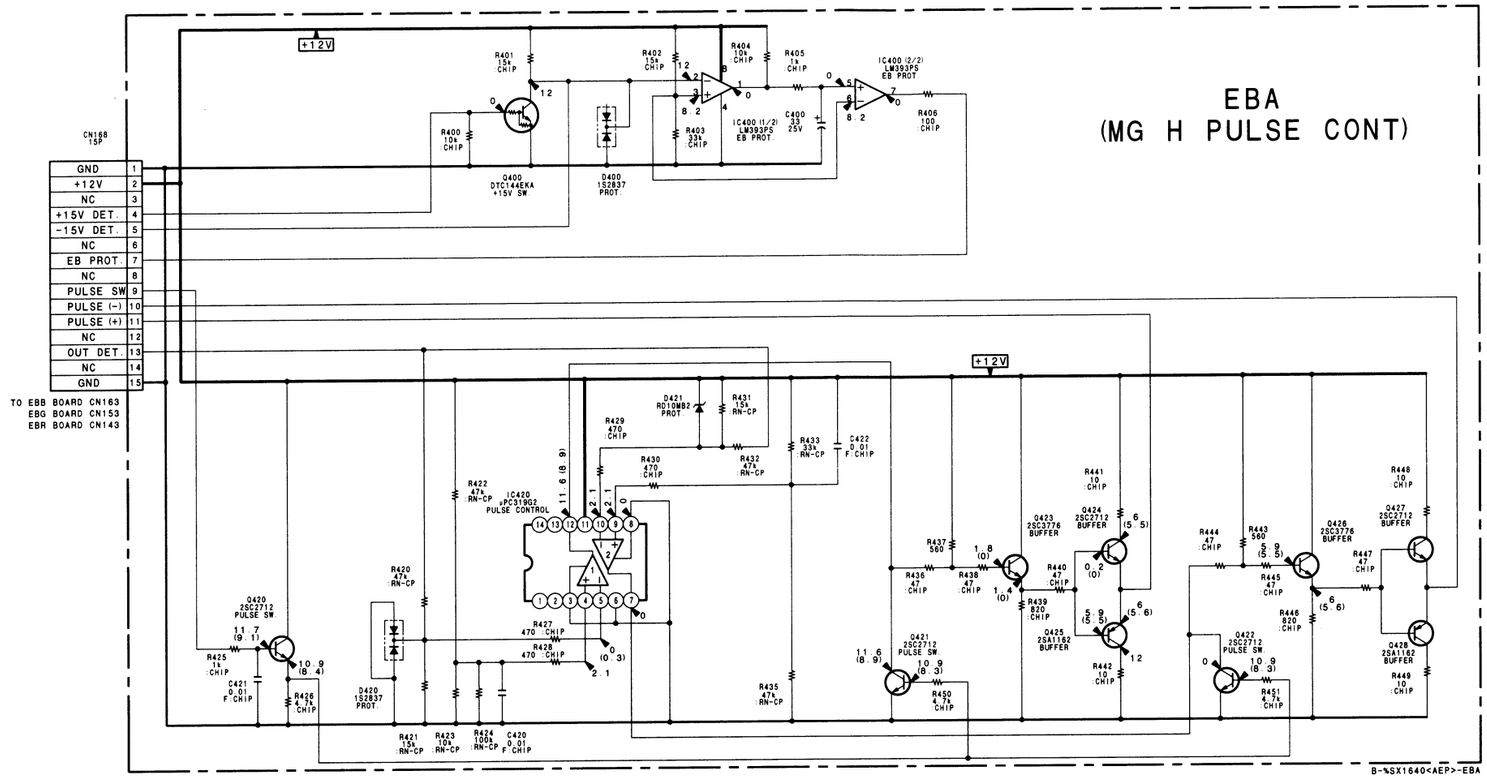

EBC BOARD

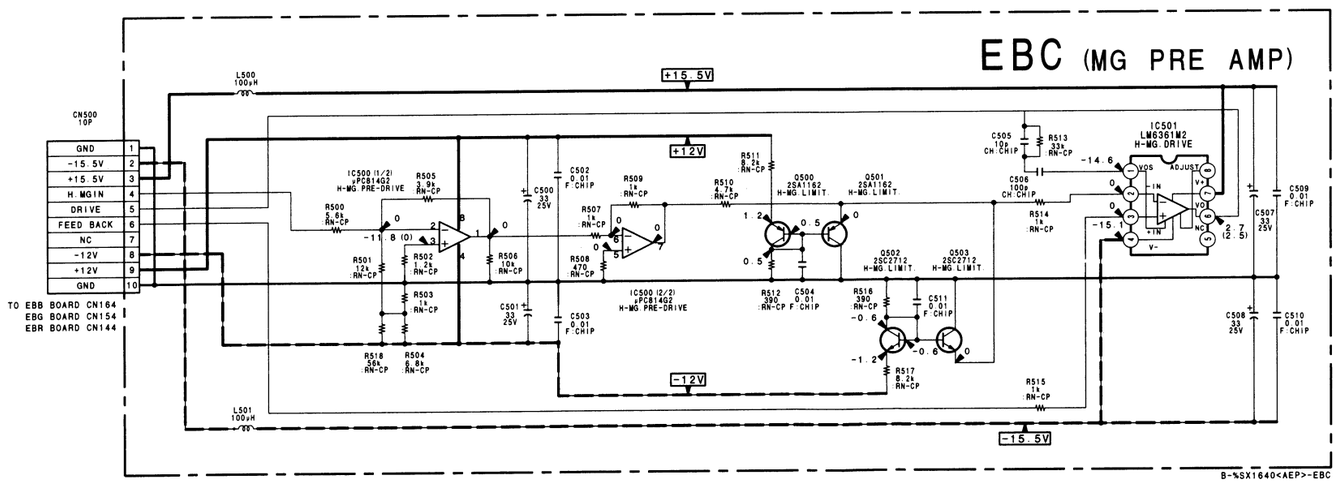

EBB BOARD

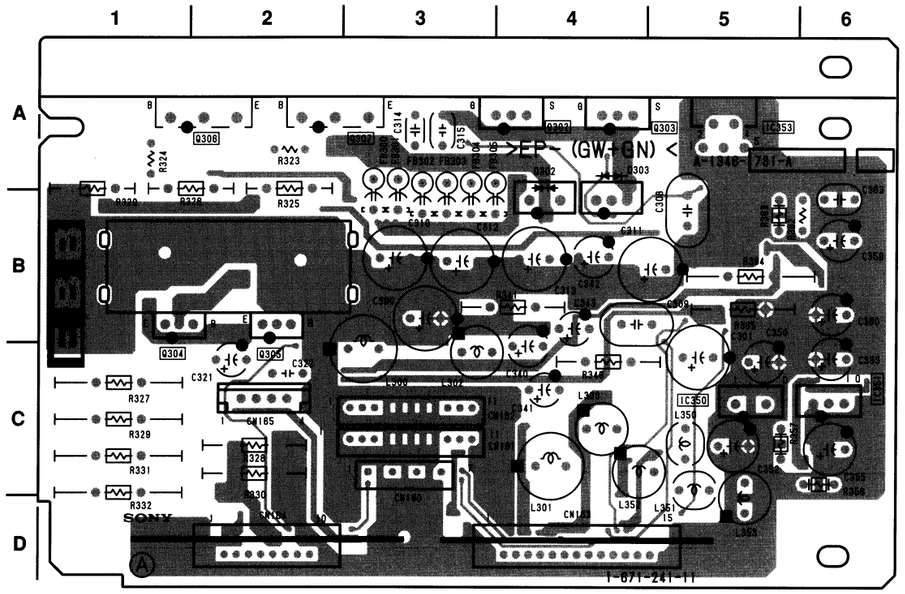

EBB BOARD (A SIDE)

EBB -A SIDE-
SUFFIX: -11

D302 A-4
D303 A-4

IC350 C-5
IC351 C-6
IC353 A-5

Q302 A-4
Q303 A-5
Q304 C-1
Q305 C-2
Q306 A-2
Q307 A-3

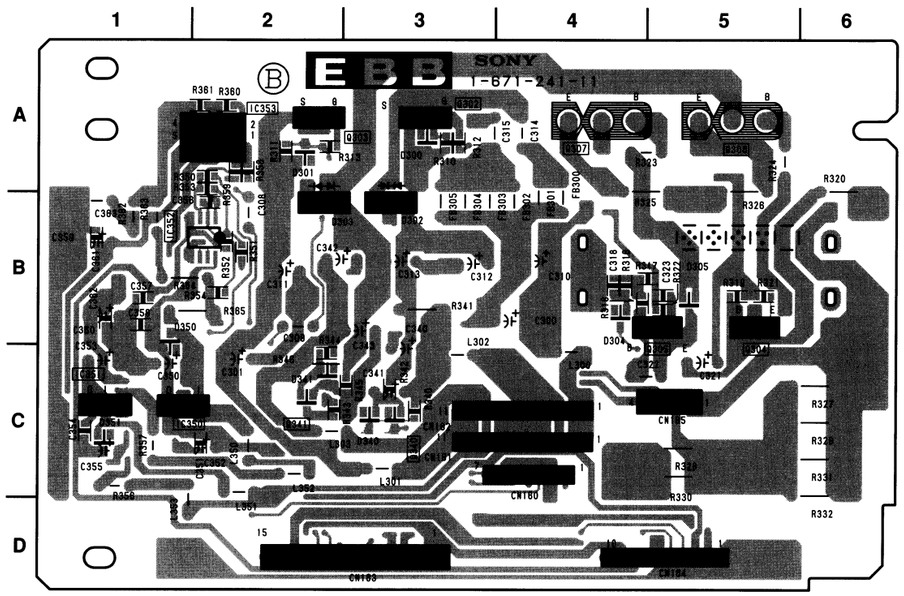

EBB BOARD (B SIDE)

EBB -B SIDE-
SUFFIX: -11

D300 A-3
D301 A-2
D302 B-3
D303 B-2
D304 B-4
D305 B-5
D340 C-3
D341 C-2
D350 B-1
D351 C-1

IC350 C-1
IC351 C-1
IC352 B-1
IC353 A-2

Q302 A-3
Q303 A-3
Q304 B-5
Q305 B-5
Q306 A-5
Q307 A-4
Q340 C-3
Q341 C-2

EBB BOARD

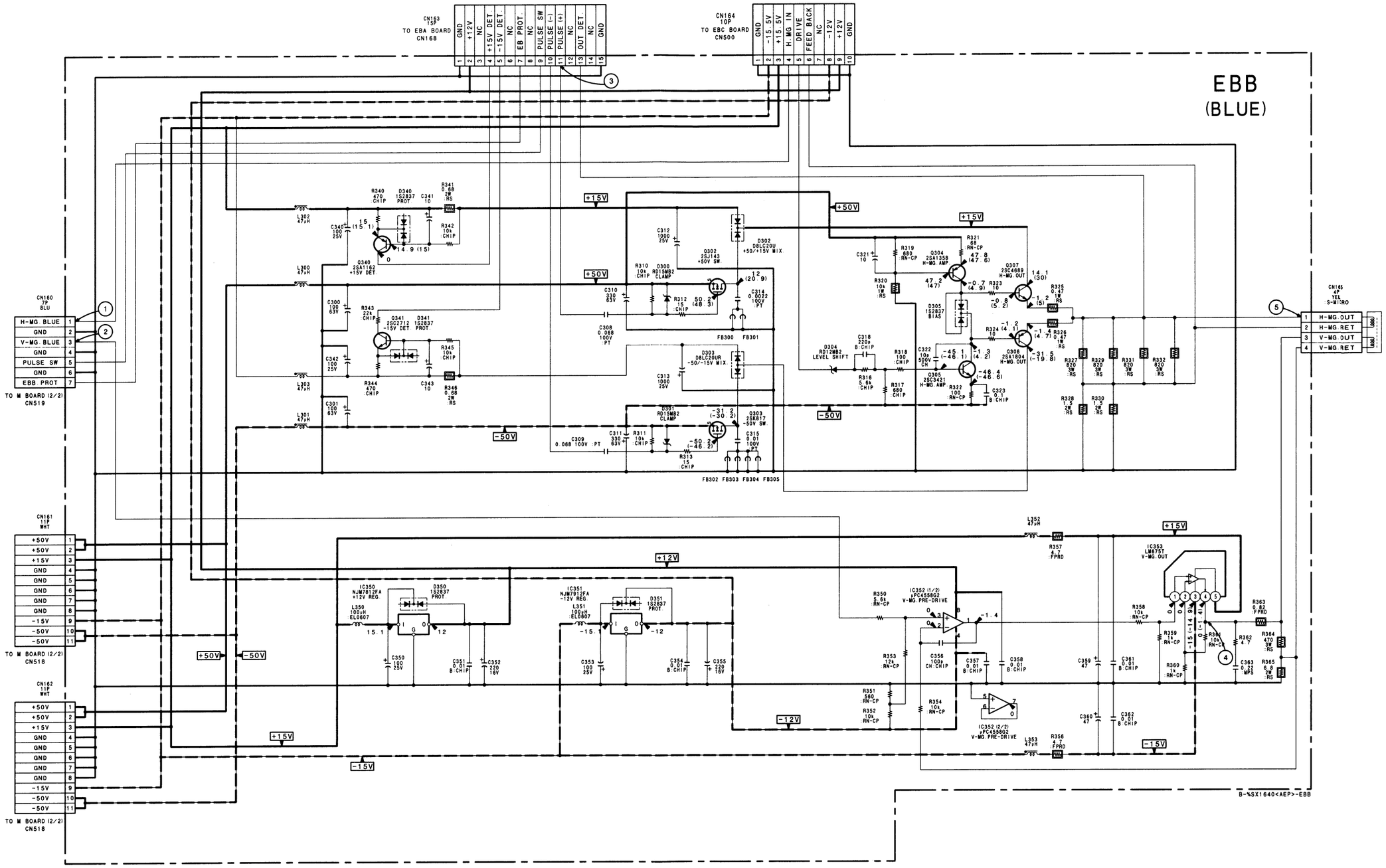

EBB BOARD WAVEFORMS

①	②	③	④	⑤
2.3 V p-p (H)	0.6 V p-p (V)	10 V p-p (H)	5.0 V p-p (V)	47.0 V p-p (H)

EBG BOARD

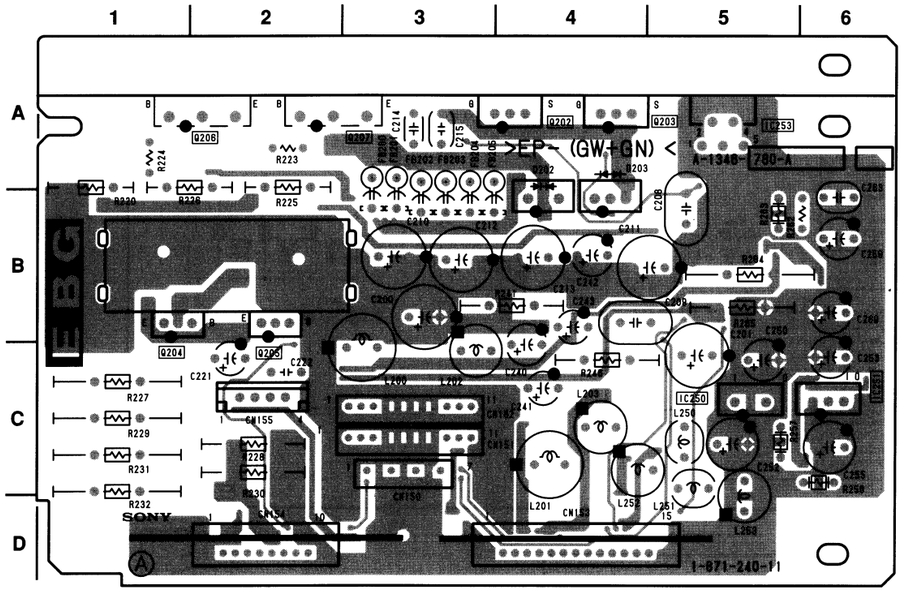

EBG BOARD (A SIDE)

EBG -A SIDE-
SUFFIX: -11

D202	A-4
D203	A-4
IC250	C-5
IC251	C-6
IC253	A-5
Q202	A-4
Q203	A-5
Q204	C-1
Q205	C-2
Q206	A-2
Q207	A-3

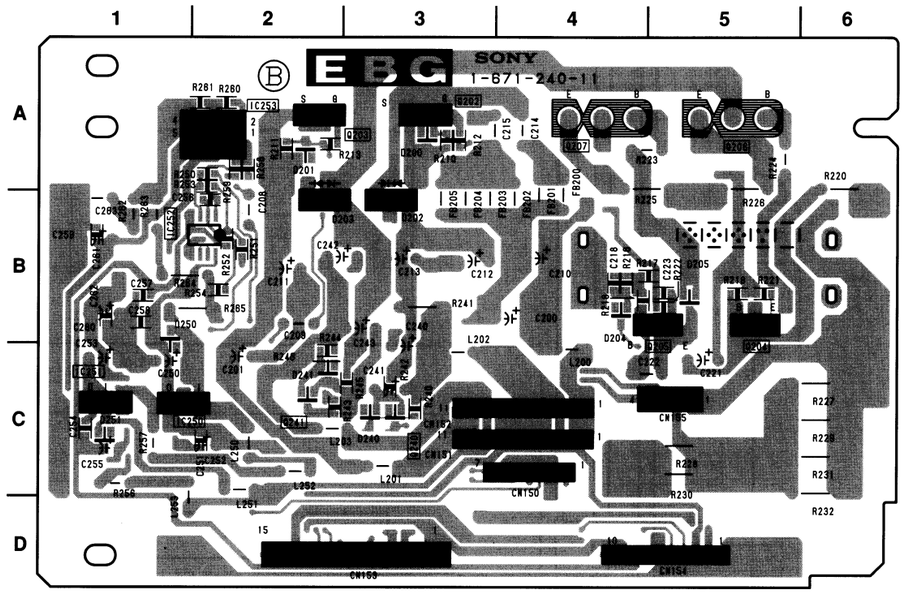

EBG BOARD (B SIDE)

EBG -B SIDE-
SUFFIX: -11

D200	A-3
D201	A-2
D202	B-3
D203	B-2
D204	B-4
D205	B-5
D240	C-3
D241	C-2
D250	B-1
D251	C-1
IC250	C-1
IC251	C-1
IC252	B-1
IC253	A-2
Q202	A-3
Q203	A-3
Q204	B-5
Q205	B-5
Q206	A-5
Q207	A-4
Q240	C-3
Q241	C-2

EBG BOARD

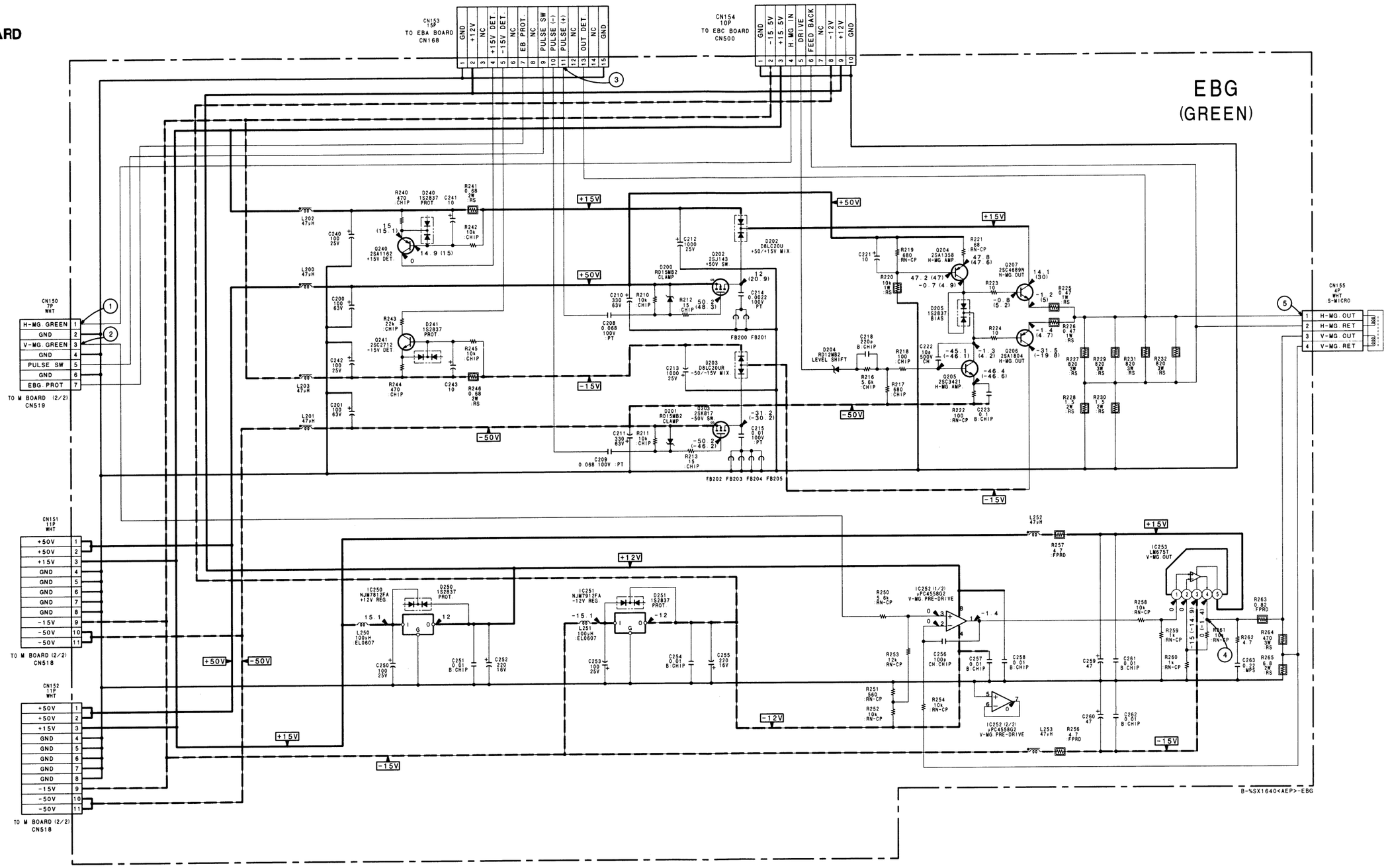

EBG BOARD WAVEFORMS

①	②	③	④	⑤
2.4 V p-p (H)	0.6 V p-p (V)	10 V p-p (H)	5.2 V p-p (V)	64.0 V p-p (H)

EBR BOARD

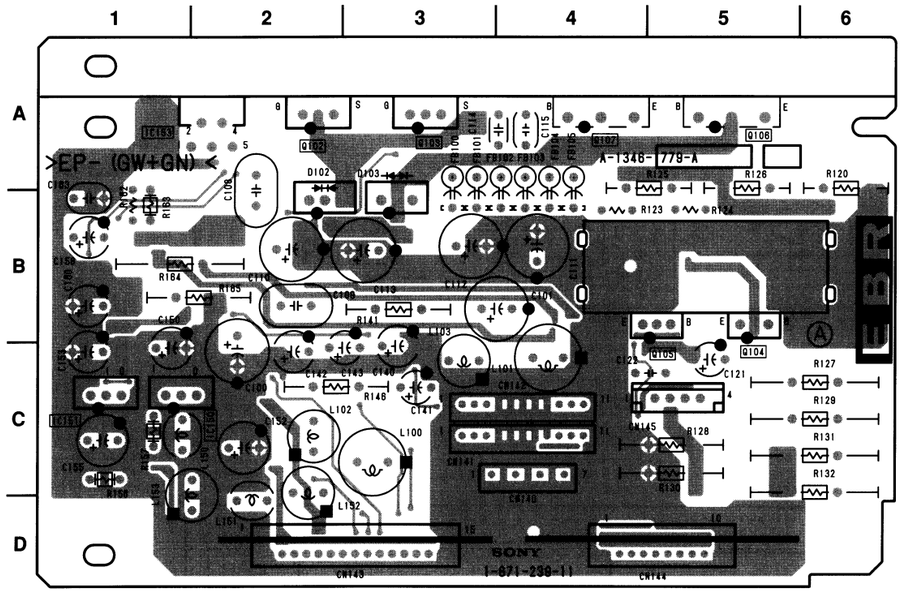

EBR BOARD (A SIDE)

EBR -A SIDE-
SUFFIX: -11

```
D102   A-2
D103   A-3

IC150  C-2
IC151  C-1
IC153  A-1

Q102   A-2
Q103   A-3
Q104   C-5
Q105   C-5
Q106   A-5
Q107   A-4
```

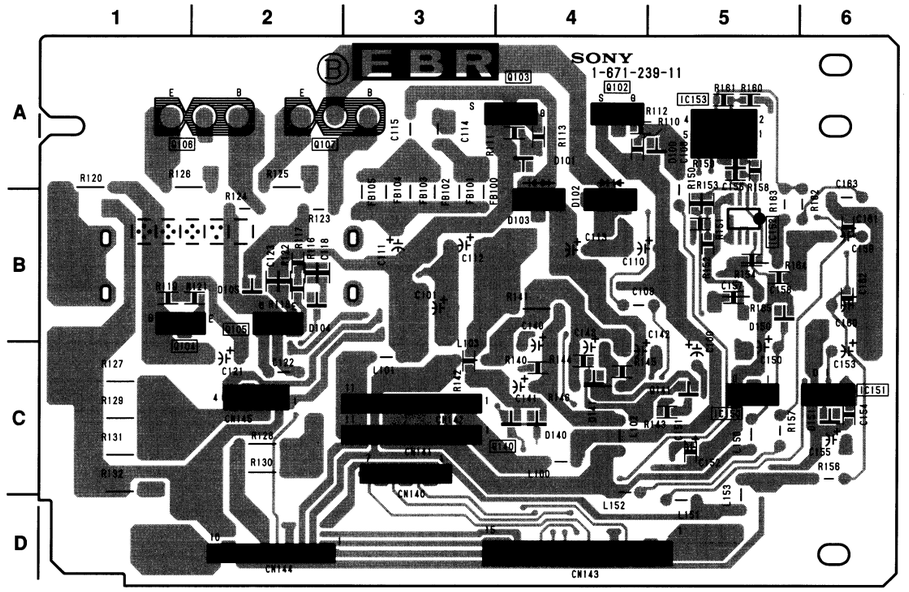

EBR BOARD (B SIDE)

EBR -B SIDE-
SUFFIX: -11

```
D100   A-5
D101   A-4
D102   B-4
D103   B-4
D104   B-2
D105   B-2
D140   C-4
D141   C-4
D150   B-5
D151   C-6

IC150  C-5
IC151  C-6
IC152  B-5
IC153  A-5

Q102   A-4
Q103   A-4
Q104   C-1
Q105   B-2
Q106   A-1
Q107   A-2
Q140   C-4
Q141   C-5
```

EBR BOARD

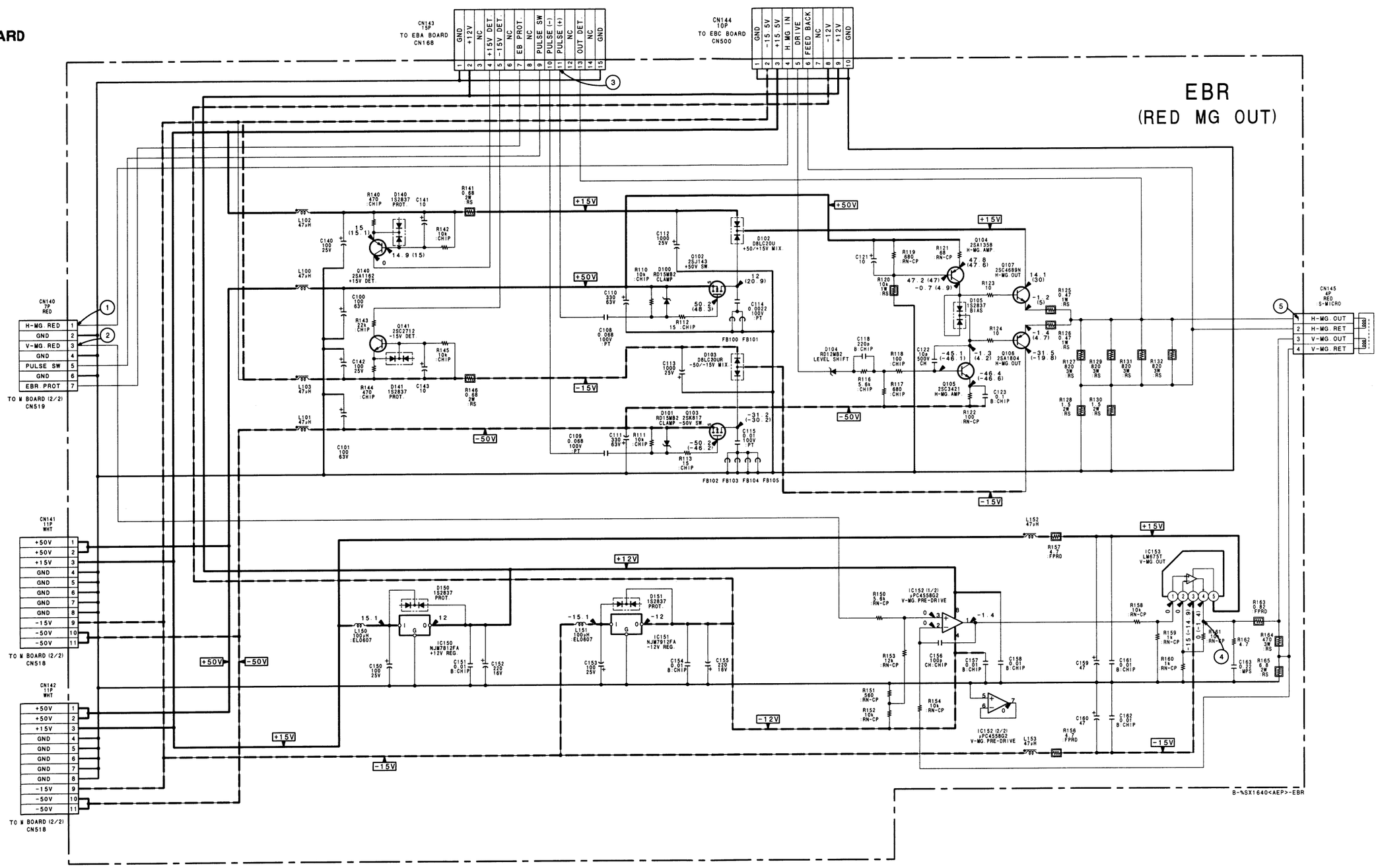

EBR BOARD WAVEFORMS

①	②	③	④	⑤
2.7 V p-p (H)	0.7 V p-p (V)	10 V p-p (H)	5.8 V p-p (V)	72.4 V p-p (H)

EBH BOARD

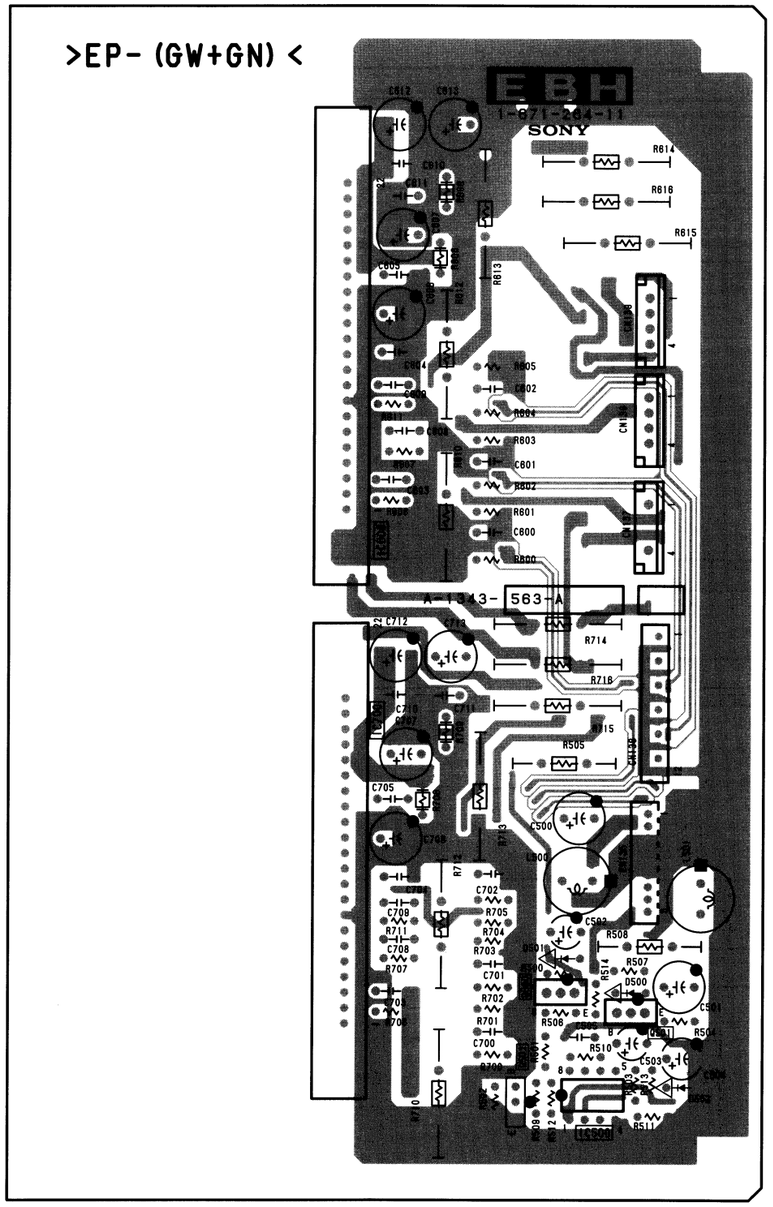

EBH -A SIDE-
SUFFIX: -11

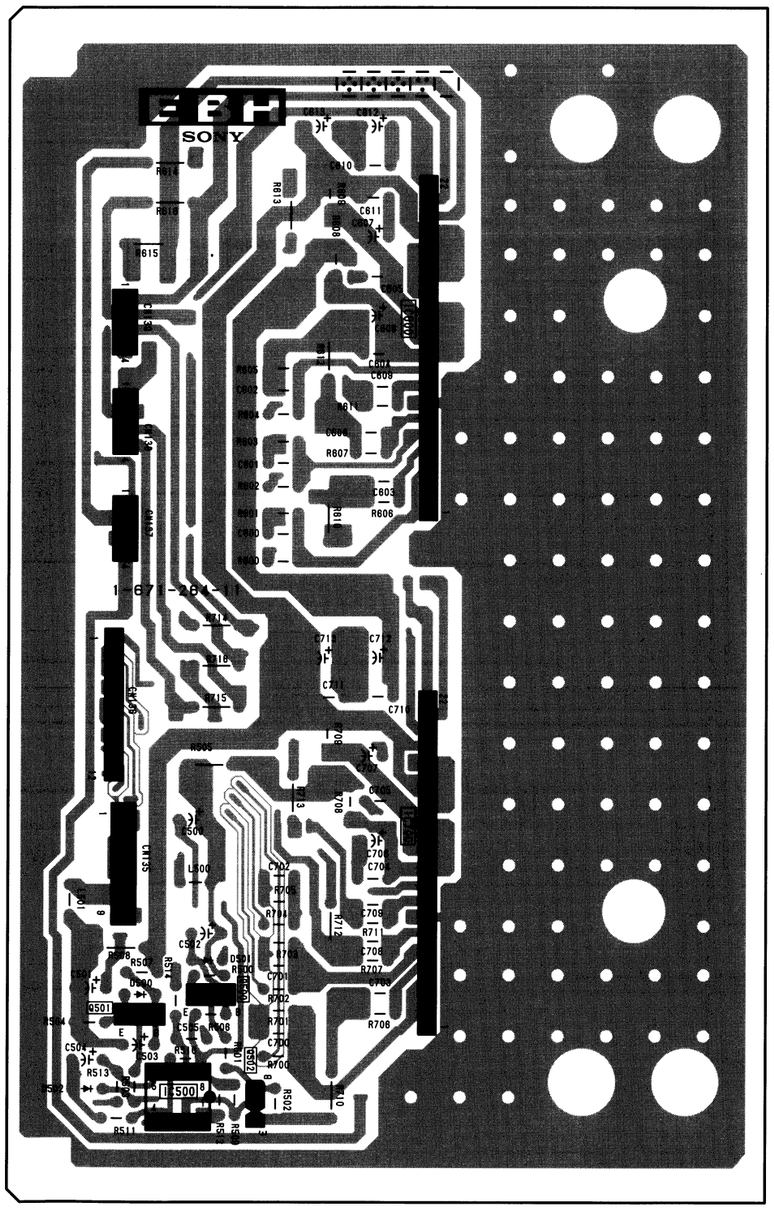

EBH -B SIDE-
SUFFIX: -11

EBH BOARD WAVEFORMS

① 1.1 V p-p (V)	⑦ 2.1 V p-p (V)
② 1.4 V p-p (V)	⑧ 2.1 V p-p (V)
③ 2.2 V p-p (V)	⑨ 1.8 V p-p (V)
④ 13.7 V p-p (V)	⑩ 19.1 V p-p (V)
⑤ 18.0 V p-p (V)	⑪ 20.5 V p-p (V)
⑥ 22.7 V p-p (V)	⑫ 17.5 V p-p (V)

EBH BOARD

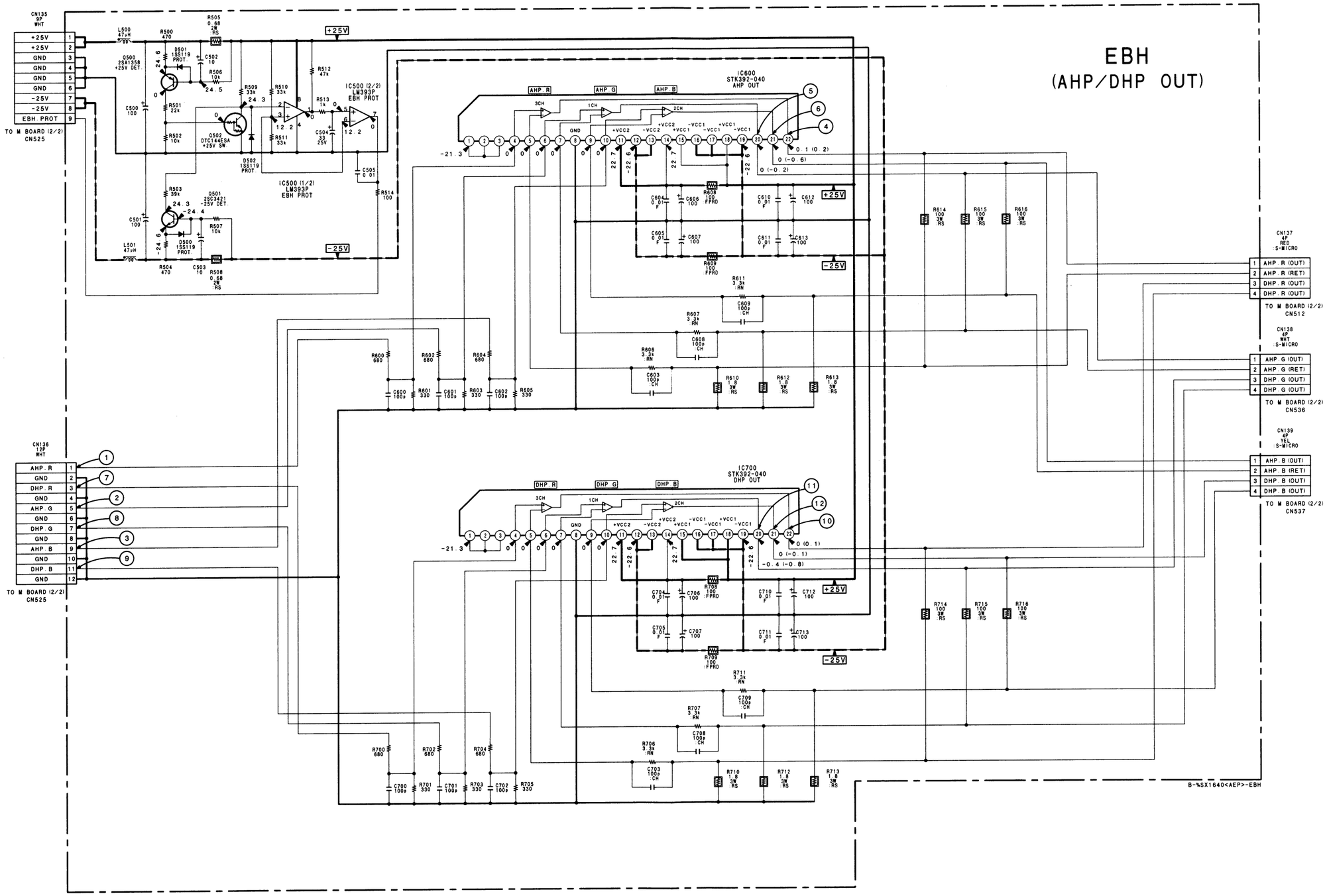
EBH
(AHP/DHP OUT)
CN135
9P
WHT
+25V
+25V
GND
GND
GND
GND
-25V
-25V
EBH PROT
TO M BOARD (2/2)
CN525
IC500 (2/2)
LM393P
EBH PROT
IC500 (1/2)
LM393P
EBH PROT
IC600
STK392-040
AHP OUT
IC700
STK392-040
DHP OUT
AHP_R
AHP_G
AHP_B
DHP_R
DHP_G
DHP_B
CN136
12P
WHT
AHP_R
GND
DHP_R
GND
AHP_G
GND
DHP_G
GND
AHP_B
GND
DHP_B
GND
TO M BOARD (2/2)
CN525
CN137
4P
RED
:S-MICRO
AHP_R (OUT)
AHP_R (RET)
DHP_R (OUT)
DHP_R (OUT)
TO M BOARD (2/2)
CN512
CN138
4P
WHT
:S-MICRO
AHP_G (OUT)
AHP_G (RET)
DHP_G (OUT)
DHP_G (OUT)
TO M BOARD (2/2)
CN536
CN139
4P
YEL
:S-MICRO
AHP_B (OUT)
AHP_B (RET)
DHP_B (OUT)
DHP_B (OUT)
TO M BOARD (2/2)
CN537
B-%SX1640<AEP>-EBH

EBQ BOARD

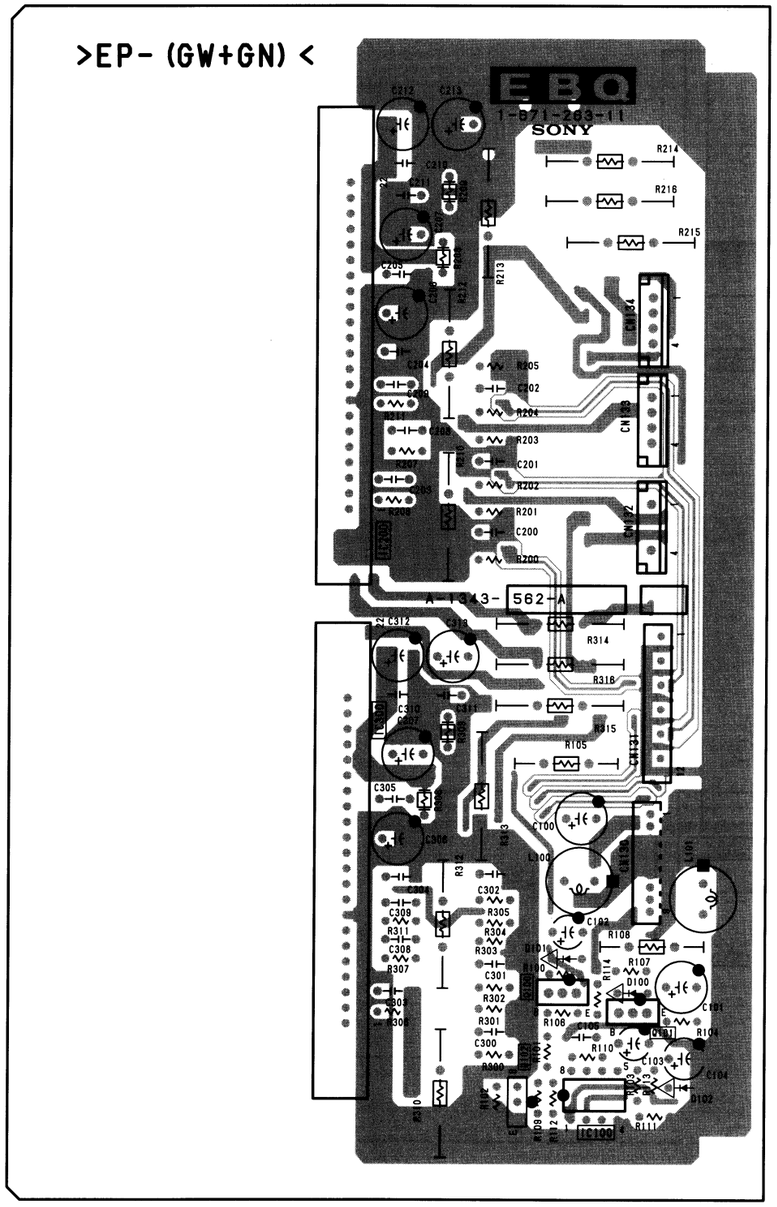

EBQ -A SIDE-
SUFFIX: -11

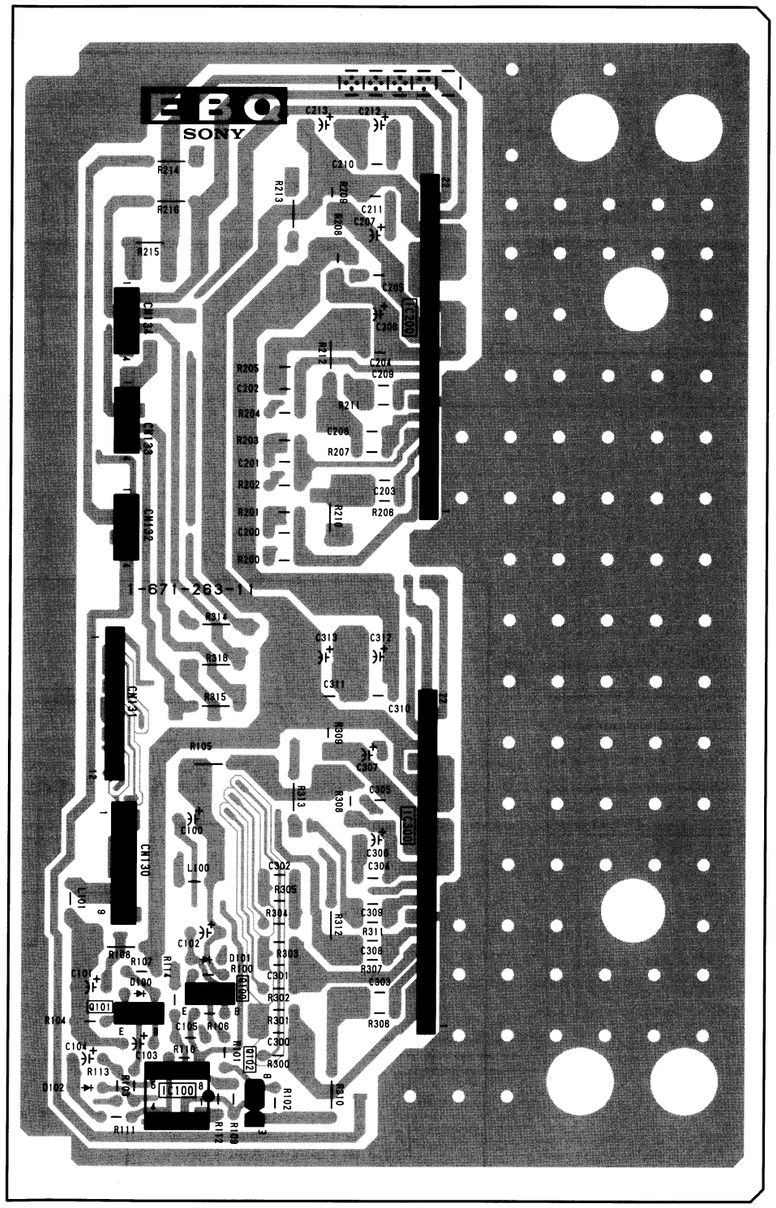

EBQ -B SIDE-
SUFFIX: -11

EBQ BOARD WAVEFORMS

① 2.0 V p-p (V)	⑦ 0.8 V p-p (V)
② 1.8 V p-p (V)	⑧ 0.9 V p-p (V)
③ 1.2 V p-p (V)	⑨ 1.4 V p-p (V)
④ 28.2 V p-p (V)	⑩ 10.1 V p-p (V)
⑤ 26.3 V p-p (V)	⑪ 10.6 V p-p (V)
⑥ 16.7 V p-p (V)	⑫ 15.7 V p-p (V)

EBQ BOARD

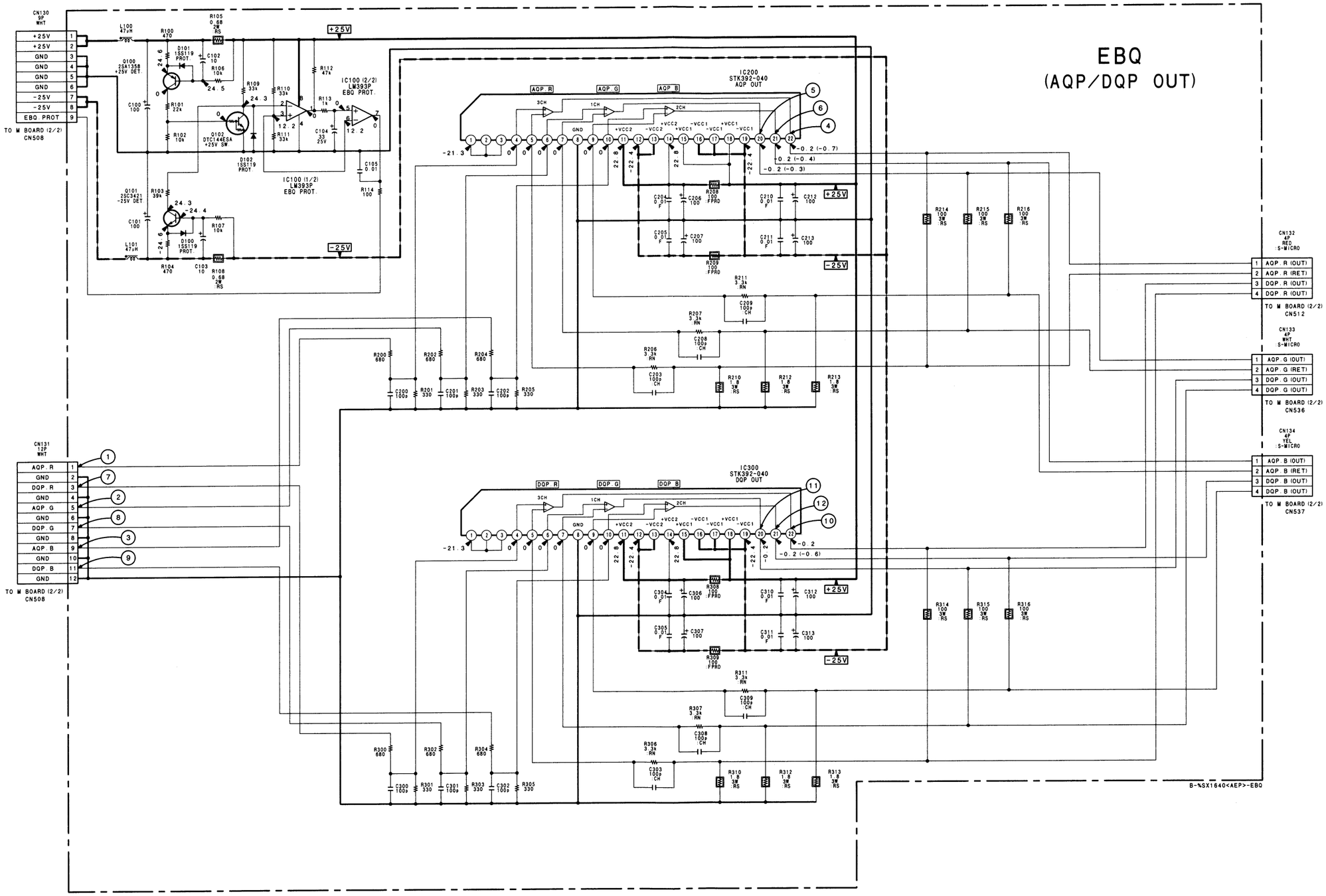
EBQ
(AQP/DQP OUT)
CN130 9P WHT
+25V
GND
-25V
EBQ PROT
TO M BOARD (2/2) CN508
IC100 (2/2) LM393P EBQ PROT
IC100 (1/2) LM393P EBQ PROT
IC200 STK392-040 AQP OUT
IC300 STK392-040 DQP OUT
AQP R
AQP G
AQP B
DQP R
DQP G
DQP B
CN131 12P WHT
CN132 4P RED :S-MICRO
AQP R (OUT)
AQP R (RET)
DQP R (OUT)
TO M BOARD (2/2) CN512
CN133 4P WHT :S-MICRO
AQP G (OUT)
AQP G (RET)
DQP G (OUT)
TO M BOARD (2/2) CN536
CN134 4P YEL :S-MICRO
AQP B (OUT)
AQP B (RET)
DQP B (OUT)
TO M BOARD (2/2) CN537
B-%SX1640<AEP>-EBQ

CAB BOARD (A SIDE)

D12	E-5
D13	D-4
D22	C-5
D24	C-4
D121	C-2
D155	C-2
D501	C-2
D511	B-2
D512	B-3
D581	C-3
D651	A-4
D652	A-4
D672	B-4
D726	A-1
D737	A-2
D738	A-2
D761	A-2
IC12	D-4
IC22	C-5
IC24	C-5
IC101	D-4
IC102	D-2
IC141	D-2
IC171	C-3
IC560	B-4
IC570	B-3
IC595	B-3
IC781	B-1
IC861	A-5
Q121	C-2
Q133	C-2
Q441	D-3
Q446	D-2
Q447	D-3
Q450	C-1
Q451	D-1
Q457	C-1
Q501	C-2
Q510	C-2
Q511	B-3
Q551	B-3
Q581	B-3
Q640	C-3
Q656	A-4
Q671	B-4
Q692	A-3
Q701	B-2
Q721	B-2
Q726	B-2
Q733	B-1
Q736	A-2
Q738	A-2
Q751	A-2
Q797	C-1
RV145	D-2
RV622	B-4
RV623	B-4
RV682	A-5
RV718	B-2
RV785	B-1
RV796	C-1
TP21	D-3
TP22	D-3
TP23	D-4
TP24	D-4
TP34	D-3
TP35	D-3
TP71	C-4
TP72	C-4
TP73	C-4
TP101	E-3
TP501	C-2
TP511	B-2
TP672	A-3
TP691	A-4
TP751	A-2

CAB BOARD

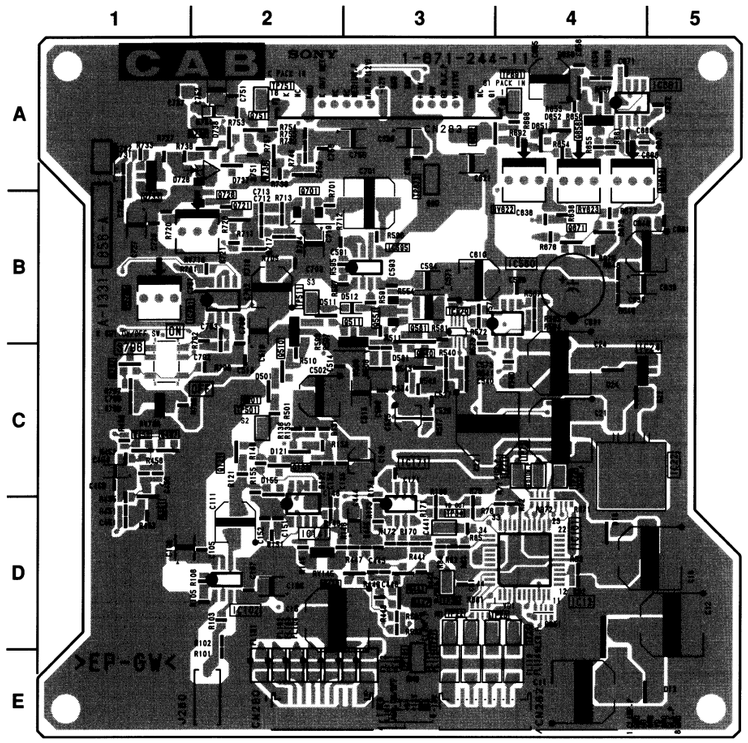

CAB -A SIDE-
SUFFIX: -11

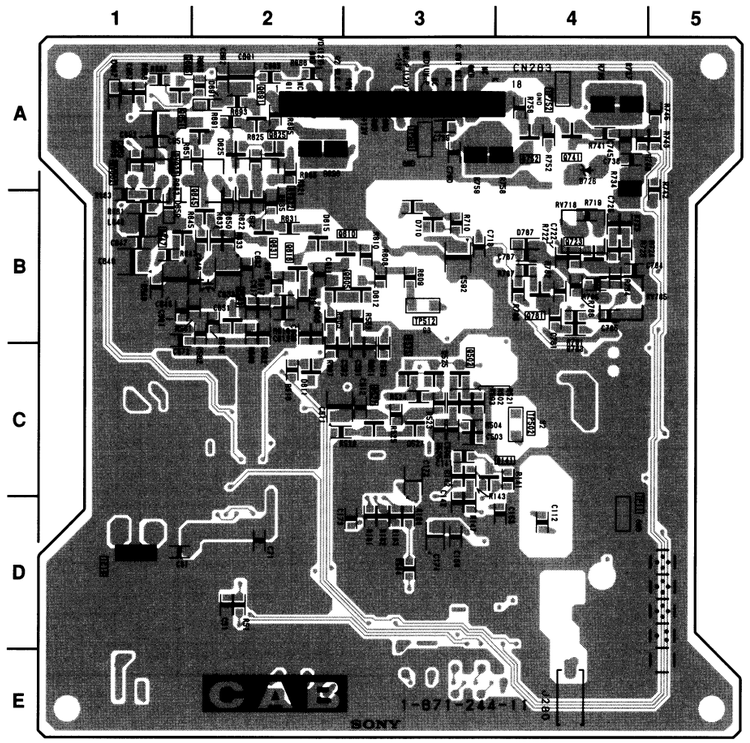

CAB -B SIDE-
SUFFIX: -11

CAB BOARD (B SIDE)

D525	C-3
D527	C-3
D611	C-2
D612	B-3
D615	B-2
D625	A-2
D650	B-1
D667	A-1
D691	A-2
D710	B-3
D726	A-4
D787	B-4
IC18	D-1
Q141	C-4
Q502	C-3
Q525	C-3
Q527	C-3
Q563	B-2
Q605	B-3
Q610	B-3
Q618	B-2
Q625	A-2
Q631	B-2
Q641	A-1
Q645	B-1
Q647	B-1
Q691	A-2
Q695	A-1
Q723	B-4
Q751	A-4
Q752	A-4
Q781	B-4
RV622	B-2
RV623	A-1
RV682	A-1
RV718	B-4
RV785	B-5
TP11	D-4
TP502	C-4
TP512	B-3
TP551	A-3
TP752	A-4

CAB BOARD WAVEFORMS

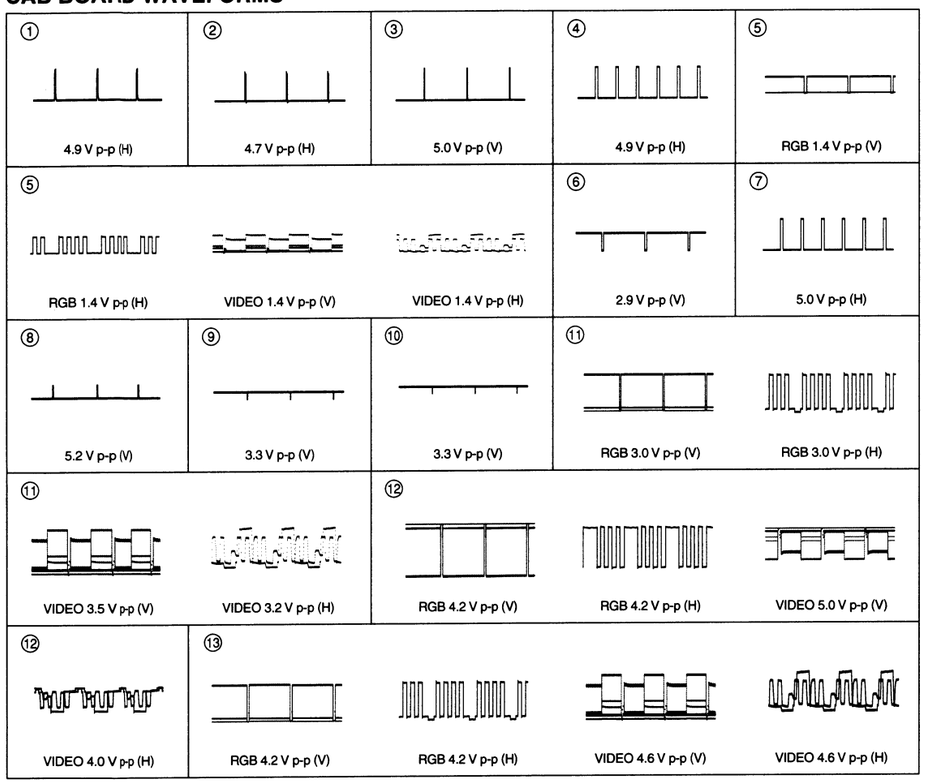

10-131

CAB (1/3) BOARD

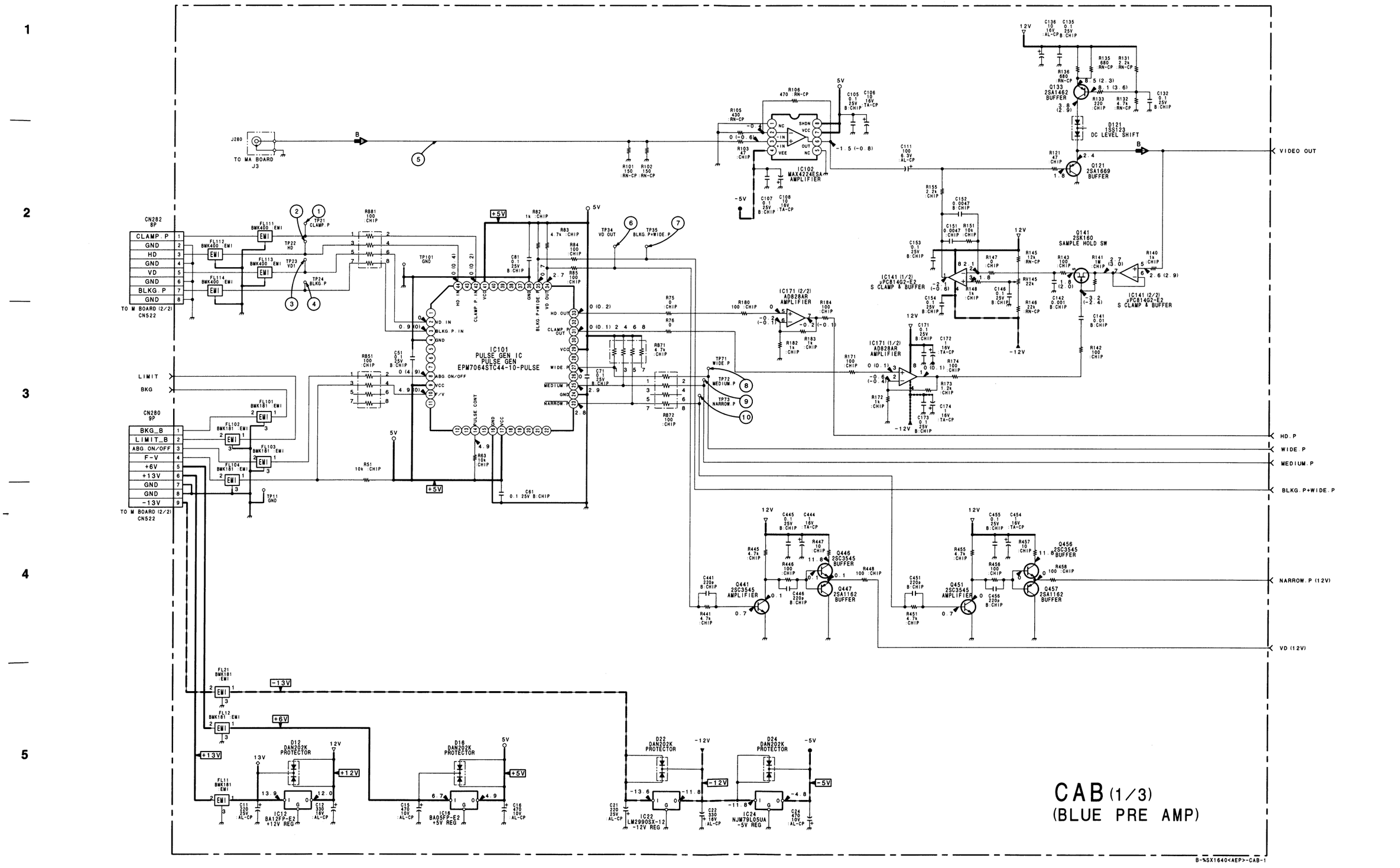
CN282 8P
CLAMP_P
GND
HD
GND
VD
GND
BLKG_P
GND
TO M BOARD (2/2) CN522
CN280 9P
BKG_B
LIMIT_B
ABG_ON/OFF
F-V
+6V
+13V
GND
GND
-13V
TO M BOARD (2/2) CN522
LIMIT
BKG
IC101 PULSE GEN IC PULSE GEN EPM7064STC44-10-PULSE
IC102 MAX4224ESA AMPLIFIER
IC171 (2/2) AD828AR AMPLIFIER
IC171 (1/2) AD828AR AMPLIFIER
IC141 (1/2) μPC814G2-E2 S CLAMP & BUFFER
IC141 (2/2) μPC814G2-E2 S CLAMP & BUFFER
Q141 2SK160 SAMPLE HOLD SW
Q133 2SA1462 BUFFER
D121 1SS123 DC LEVEL SHIFT
Q121 2SA1669 BUFFER
Q441 2SC3545 AMPLIFIER
Q446 2SC3545 BUFFER
Q447 2SA1162 BUFFER
Q451 2SC3545 AMPLIFIER
Q456 2SC3545 BUFFER
Q457 2SA1162 BUFFER
D12 DAN202K PROTECTOR
IC12 BA12FP-E2 +12V REG
D16 DAN202K PROTECTOR
IC16 BA05FP-E2 +5V REG
D22 DAN202K PROTECTOR
IC22 LM2990SX-12 -12V REG
D24 DAN202K PROTECTOR
IC24 NJM79L05UA -5V REG
VIDEO OUT
HD.P
WIDE.P
MEDIUM.P
BLKG.P+WIDE.P
NARROW.P (12V)
VD (12V)
CAB (1/3)
(BLUE PRE AMP)
B-%SX1640<AEP>-CAB-1

 CAB (2/3)

CAB (2/3) BOARD

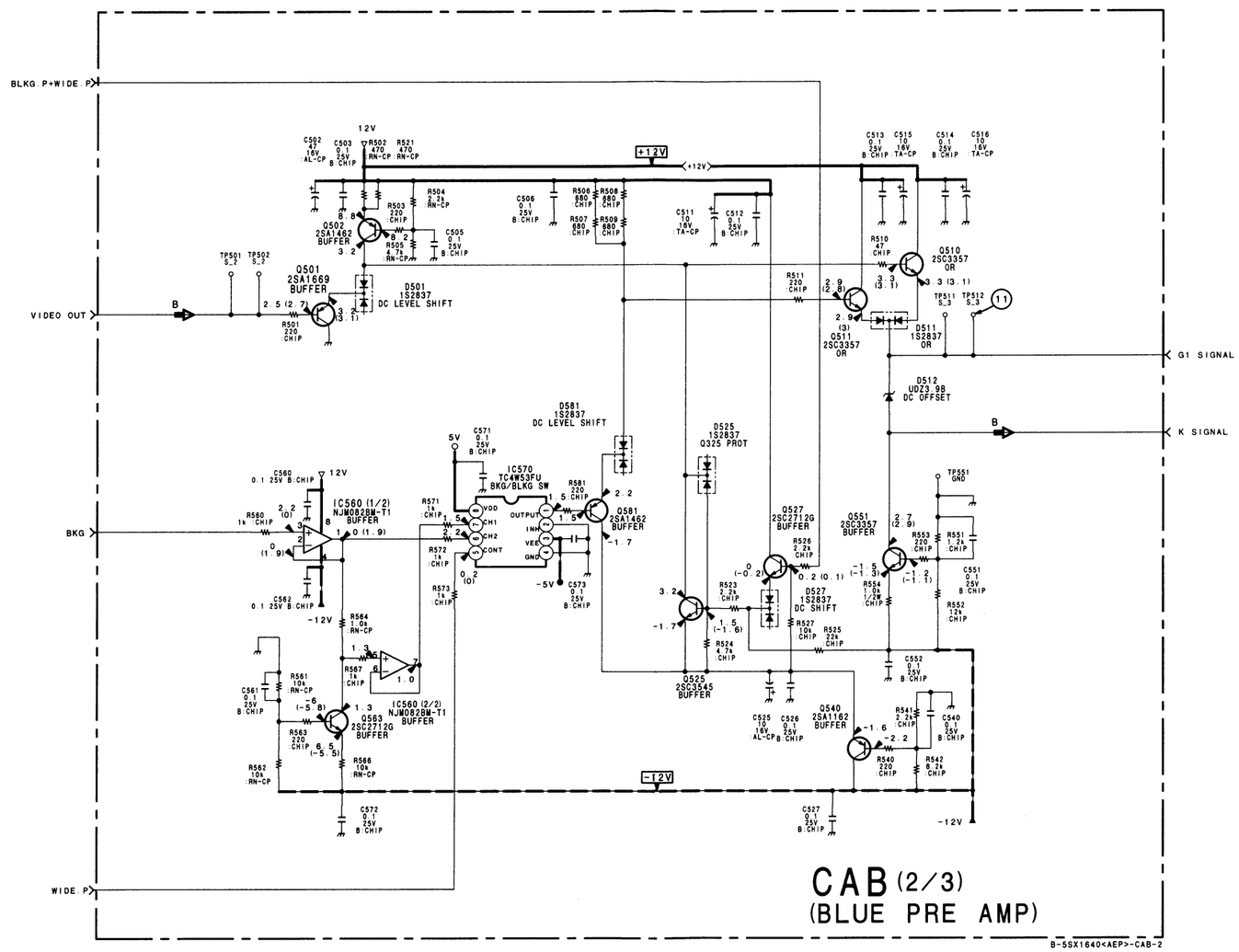

 10-133

 CAB (3/3)

CAB (3/3) BOARD

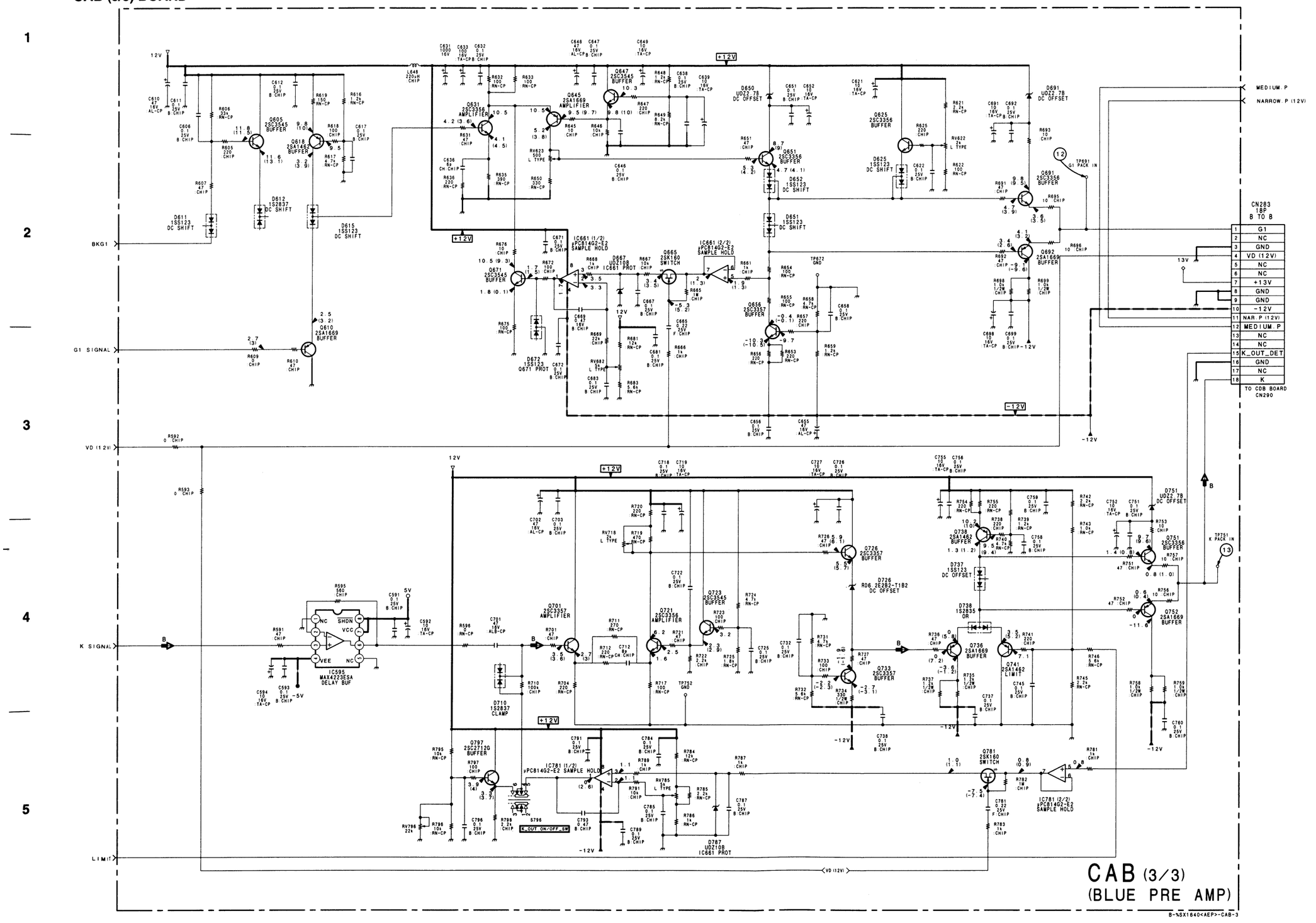

CAB BAORD (2/3) IC570
TC4W53FU

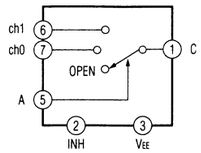

 10-134

CBB BOARD

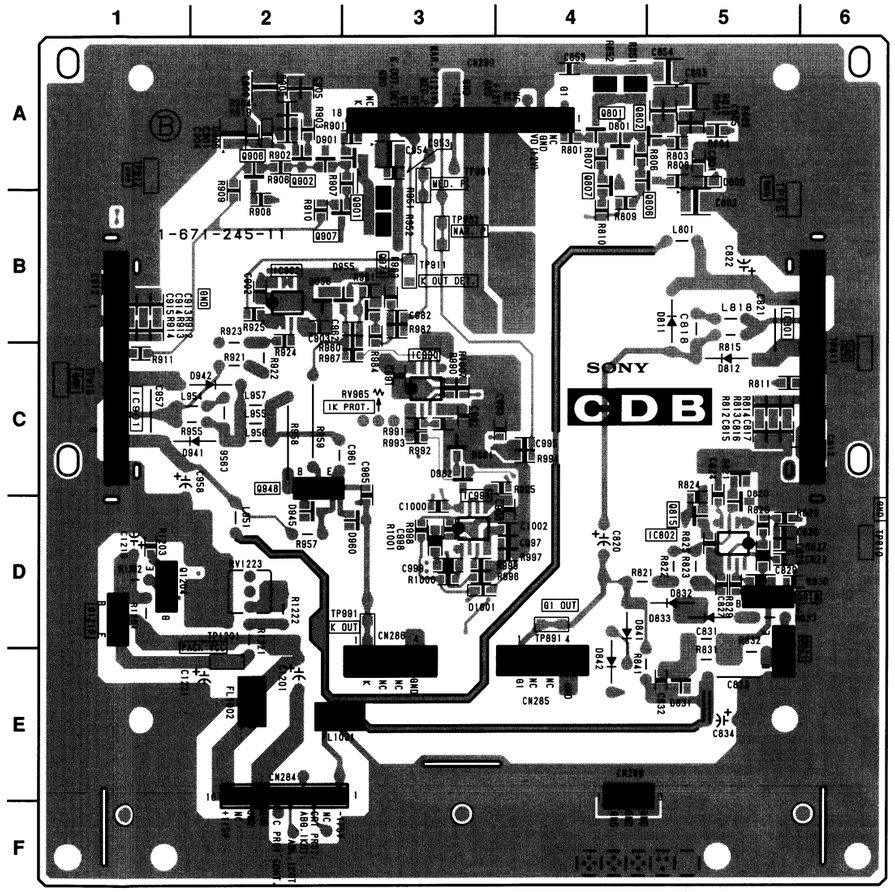

CBB -B SIDE-
SUFFIX: -11

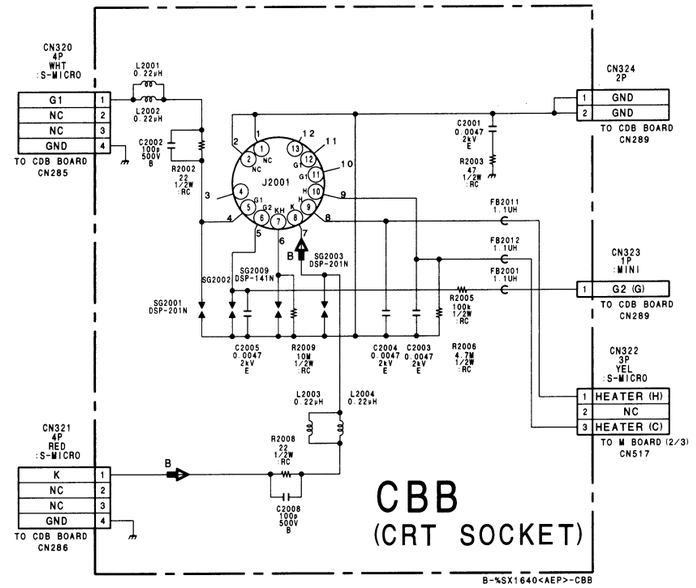

CDB BOARD

CDB BOARD (A SIDE)

D811	B-2
D812	C-2
D832	D-2
D833	D-2
D841	D-2
D842	E-2
D851	B-3
D861	C-3
D941	C-5
D942	C-5
D961	D-4
D965	C-3
D1211	D-5
D1215	D-5
IC801	C-1
IC851	B-3
IC861	C-3
IC901	B-5
IC961	D-4
IC971	D-3
IC981	C-3
IC1211	D-5
Q819	D-1
Q821	E-1
Q948	D-4
Q961	D-3
Q1204	E-5
Q1210	E-6
RV965	C-4
RV1223	D-5

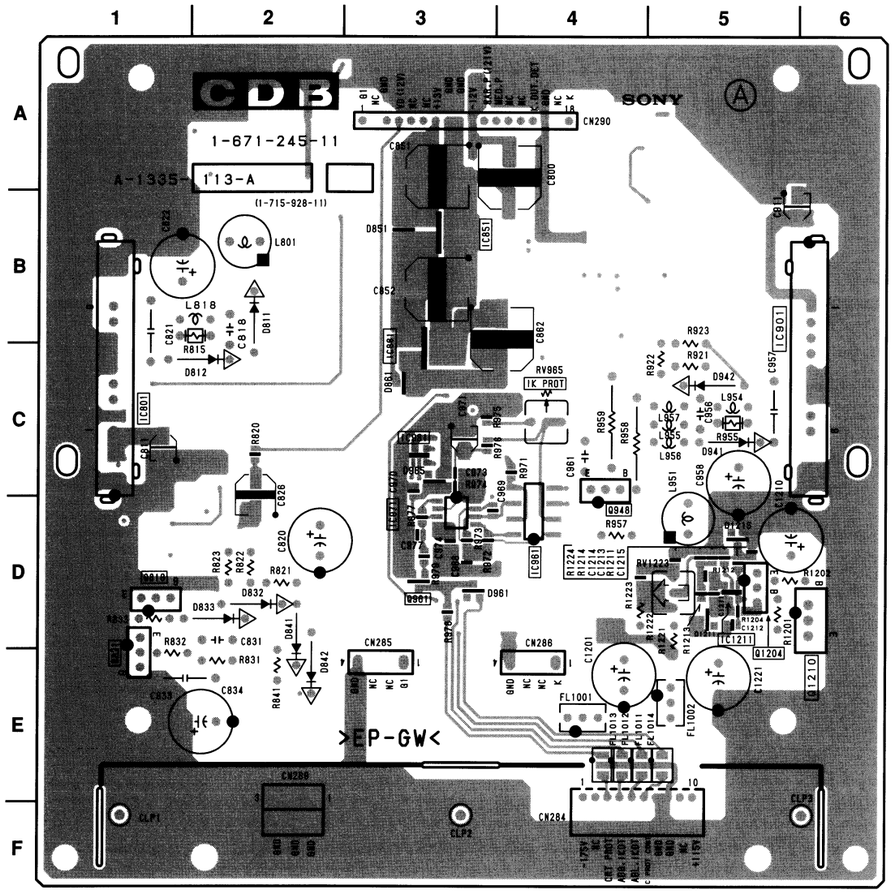

CDB -A SIDE-
SUFFIX: -11

CDB BOARD (B SIDE)

D801	A-4
D806	A-5
D811	B-5
D812	C-5
D820	C-5
D821	C-5
D831	E-5
D832	D-5
D833	D-5
D841	D-4
D842	E-4
D901	A-2
D906	A-2
D941	C-2
D942	C-2
D945	D-2
D955	B-3
D956	B-2
D960	D-3
D981	C-3
D982	C-3
D1001	D-3
IC801	B-5
IC802	D-5
IC901	C-1
IC902	B-2
IC990	C-3
IC998	C-3
Q801	A-4
Q802	A-4
Q806	B-5
Q807	A-4
Q815	D-5
Q819	D-6
Q821	D-6
Q901	B-3
Q902	A-2
Q906	A-2
Q907	B-2
Q948	C-2
Q974	B-3
Q1204	D-1
Q1210	D-1
RV965	C-3
RV1223	D-2
TP810	D-6
TP811	C-6
TP891	D-4
TP910	C-1
TP911	B-3
TP912	A-1
TP951	B-5
TP981	A-3
TP982	B-3
TP991	D-3
TP1201	D-2

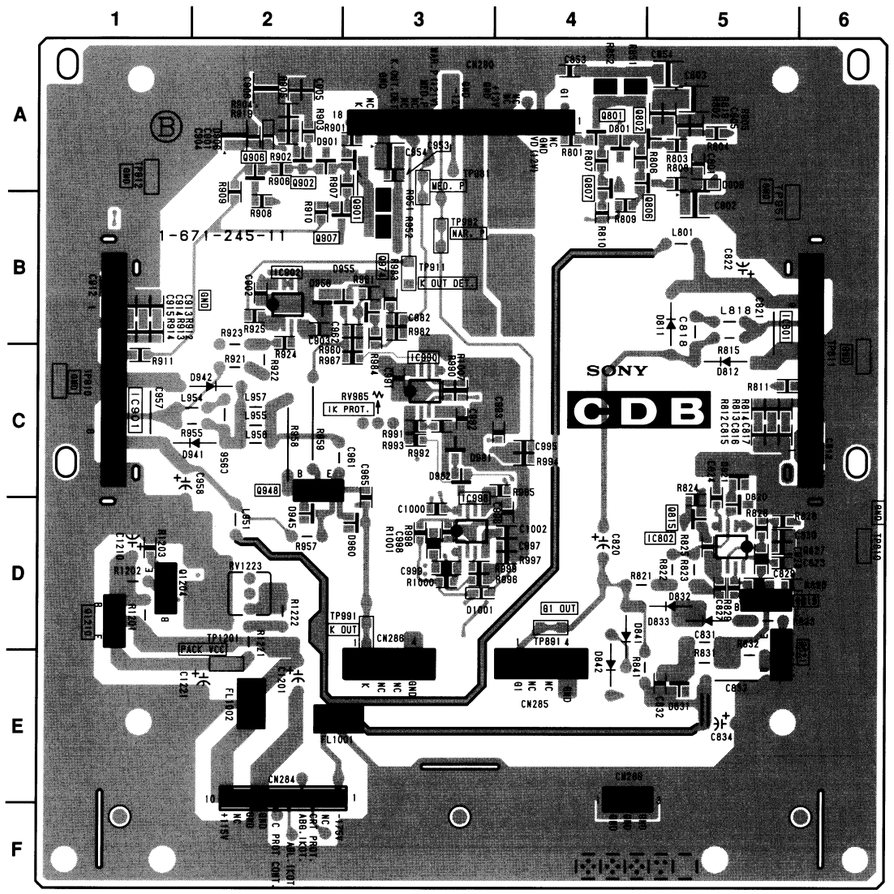

CDB -B SIDE-
SUFFIX: -11

CDB BOARD WAVEFORMS

①				③
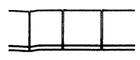		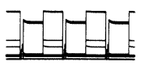		
RGB 63.8 V p-p (V)	RGB 63.8 V p-p (H)	VIDEO 73.8 V p-p (V)	VIDEO 63.8 V p-p (H)	12.0 V p-p (V)
②				④
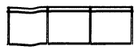		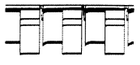	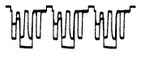	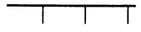
RGB 62.0 V p-p (V)	RGB 62.0 V p-p (H)	VIDEO 75.2 V p-p (V)	VIDEO 65.4 V p-p (H)	2.7 V p-p (V)

CDB BOARD

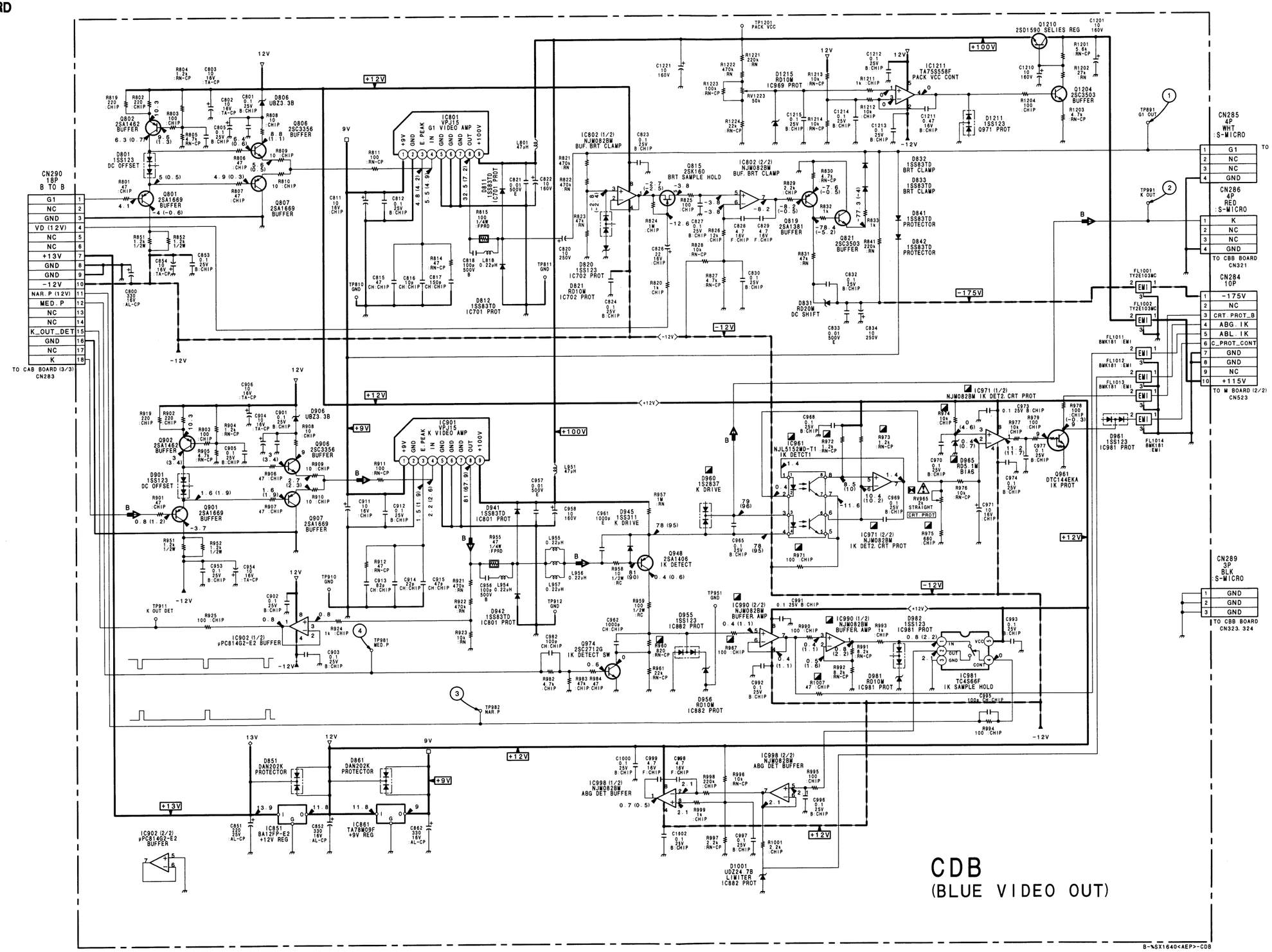
CN290
18P
B TO B
G1
NC
GND
VD (12V)
NC
NC
+13V
GND
GND
-12V
NAR. P (12V)
MED. P
NC
NC
K_OUT_DET
GND
NC
K
TO CAB BOARD (3/3)
CN283
IC801
VPJ15
G1 VIDEO AMP
IC901
VPJ15
K VIDEO AMP
IC1211
TA75S558F
PACK VCC CONT
Q1210
2SD1590 SELIES REG
Q1204
2SC3503
BUFFER
CN285
4P
WHT
:S-MICRO
TO CBB BOARD
CN320
CN286
4P
RED
:S-MICRO
TO CBB BOARD
CN321
CN284
10P
-175V
NC
CRT. PROT_B
ABG. IK
ABL. IK
C_PROT_CONT
GND
GND
NC
+115V
TO M BOARD (2/2)
CN523
CN289
3P
BLK
:S-MICRO
GND
GND
GND
TO CBB BOARD
CN323, 324
IC971 (1/2)
NJM082BM IK DET2. CRT PROT
IC971 (2/2)
NJM082BM
IK DET2. CRT PROT
IC961
NJL5152WD-T1
IK DETCT1
IC990 (2/2)
NJM082BM
BUFFER. AMP
IC990 (1/2)
NJM082BM
BUFFER. AMP
IC981
TC4S66F
IK SAMPLE HOLD
IC998 (2/2)
NJM082BM
ABG DET BUFFER
IC998 (1/2)
NJM082BM
ABG DET BUFFER
IC902 (1/2)
μPC814G2-E2 BUFFER
IC902 (2/2)
μPC814G2-E2
BUFFER
IC851
BA12FP-E2
+12V REG
IC861
TA78M09F
+9V REG
CDB
(BLUE VIDEO OUT)
B-%SX1640<AEP>-CDB

CAG BOARD (A SIDE)

D12	E-5
D13	D-4
D22	C-5
D24	C-4
D121	C-2
D155	C-2
D501	C-2
D511	B-2
D512	B-3
D581	C-3
D651	A-4
D652	A-4
D672	B-4
D726	A-1
D737	A-2
D738	A-2
D761	A-2
IC12	D-4
IC22	C-5
IC24	C-5
IC101	D-4
IC102	D-2
IC141	D-2
IC171	C-3
IC560	B-4
IC570	B-3
IC595	B-3
IC781	B-1
IC861	A-5
Q121	C-2
Q133	C-2
Q441	D-3
Q446	D-2
Q447	D-3
Q450	C-1
Q451	D-1
Q457	C-1
Q501	C-2
Q510	C-2
Q511	B-3
Q551	B-3
Q581	B-3
Q640	C-3
Q656	A-4
Q671	B-4
Q692	A-3
Q701	B-2
Q721	B-2
Q726	B-2
Q733	B-1
Q736	A-2
Q738	A-2
Q751	A-2
Q797	C-1
RV145	D-2
RV622	B-4
RV623	B-4
RV682	A-5
RV718	B-2
RV785	B-1
RV796	C-1
TP21	D-3
TP22	D-3
TP23	D-4
TP24	D-4
TP34	D-3
TP35	D-3
TP71	C-4
TP72	C-4
TP73	C-4
TP101	E-3
TP501	C-2
TP511	B-2
TP672	A-3
TP691	A-4
TP751	A-2

CAG BOARD

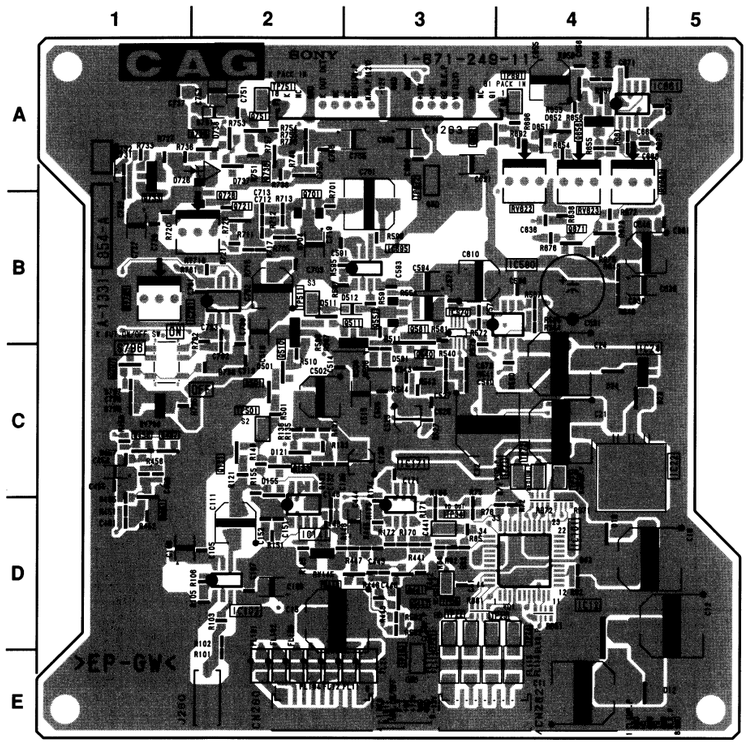

CAG -A SIDE-
SUFFIX: -11

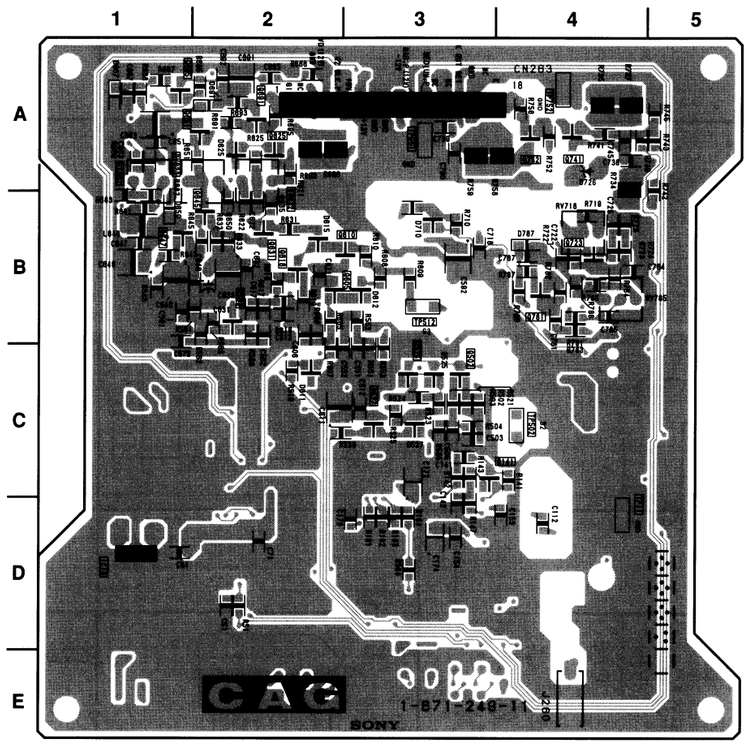

CAG -B SIDE-
SUFFIX: -11

CAG BOARD (B SIDE)

D525	C-3
D527	C-3
D611	C-2
D612	B-3
D615	B-2
D625	A-2
D650	B-1
D667	A-1
D691	A-2
D710	B-3
D726	A-4
D787	B-4
IC18	D-1
Q141	C-4
Q502	C-3
Q525	C-3
Q527	C-3
Q563	B-2
Q605	B-3
Q610	B-3
Q618	B-2
Q625	A-2
Q631	B-2
Q641	A-1
Q645	B-2
Q647	B-1
Q691	A-2
Q695	A-1
Q723	B-4
Q751	A-4
Q752	A-4
Q781	B-4
RV622	B-2
RV623	A-1
RV682	A-1
RV718	B-4
RV785	B-5
TP11	D-4
TP502	C-4
TP512	B-3
TP551	A-3
TP752	A-4

CAG BOARD WAVEFORMS

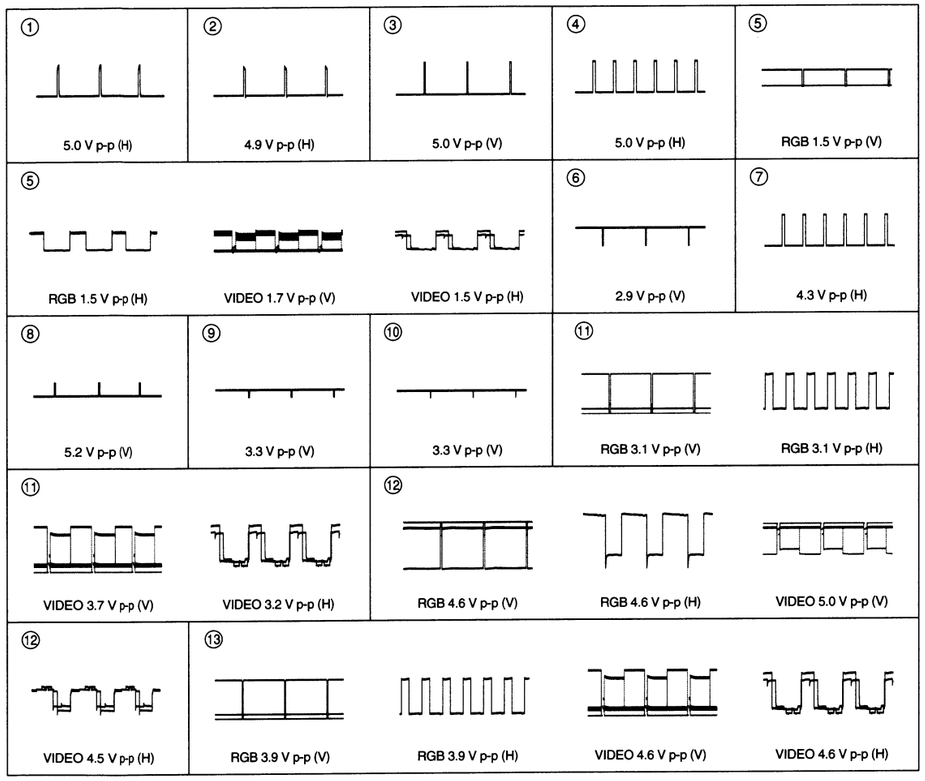

10-139

CAG (1/3) BOARD

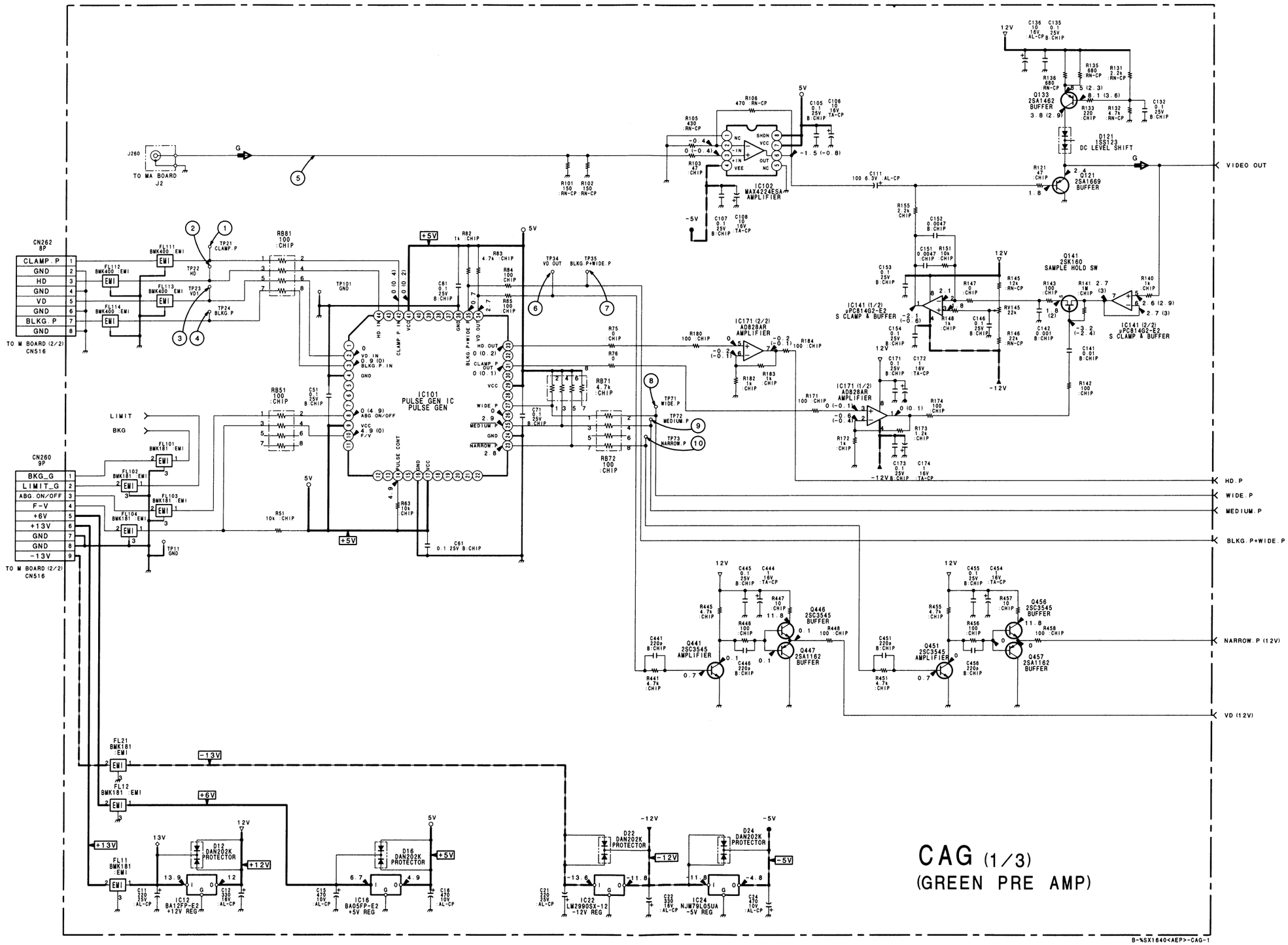
CAG (1/3)
(GREEN PRE AMP)
IC101
PULSE GEN IC
PULSE GEN
IC102
MAX4224ESA
AMPLIFIER
IC171 (2/2)
AD828AR
AMPLIFIER
IC171 (1/2)
AD828AR
AMPLIFIER
IC141 (1/2)
μPC814G2-E2
S CLAMP & BUFFER
IC141 (2/2)
μPC814G2-E2
S CLAMP & BUFFER
Q133
2SA1462
BUFFER
Q121
2SA1669
BUFFER
Q141
2SK160
SAMPLE HOLD SW
D121
1SS123
DC LEVEL SHIFT
Q441
2SC3545
AMPLIFIER
Q446
2SC3545
BUFFER
Q447
2SA1162
BUFFER
Q451
2SC3545
AMPLIFIER
Q456
2SC3545
BUFFER
Q457
2SA1162
BUFFER
IC12
BA12FP-E2
+12V REG
IC16
BA05FP-E2
+5V REG
IC22
LM2990SX-12
-12V REG
IC24
NJM79L05UA
-5V REG
D12
DAN202K
PROTECTOR
D16
DAN202K
PROTECTOR
D22
DAN202K
PROTECTOR
D24
DAN202K
PROTECTOR
CN262
8P
CLAMP_P
GND
HD
GND
VD
GND
BLKG_P
GND
TO M BOARD (2/2)
CN516
CN260
9P
BKG_G
LIMIT_G
ABG_ON/OFF
F-V
+6V
+13V
GND
GND
-13V
TO M BOARD (2/2)
CN516
TO MA BOARD
J2
VIDEO OUT
HD_P
WIDE_P
MEDIUM_P
BLKG_P+WIDE_P
NARROW_P (12V)
VD (12V)
B-%SX1640<AEP>-CAG-1

 CAG (2/3)

CAG (2/3) BOARD

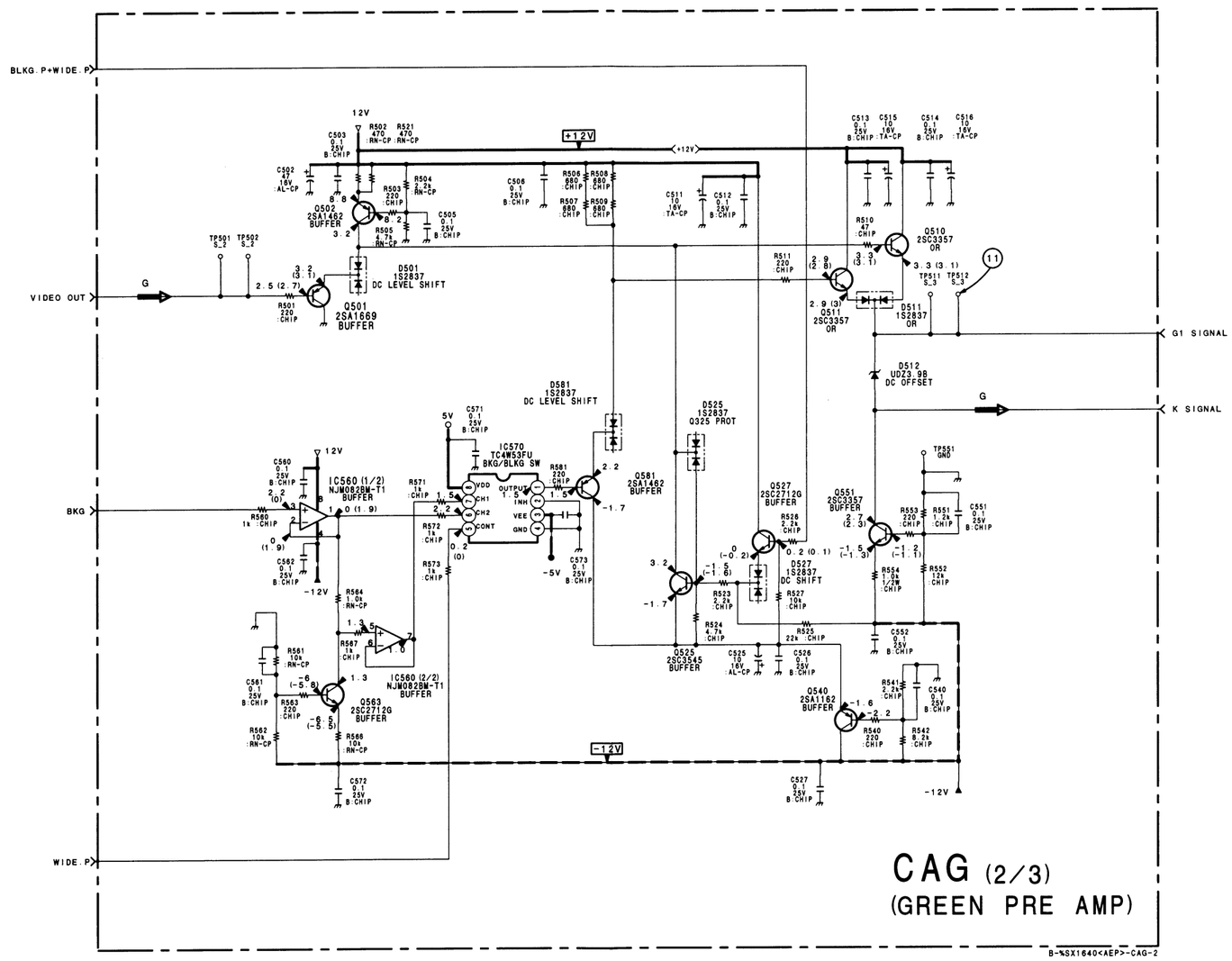

 10-141

CAG (3/3) BOARD

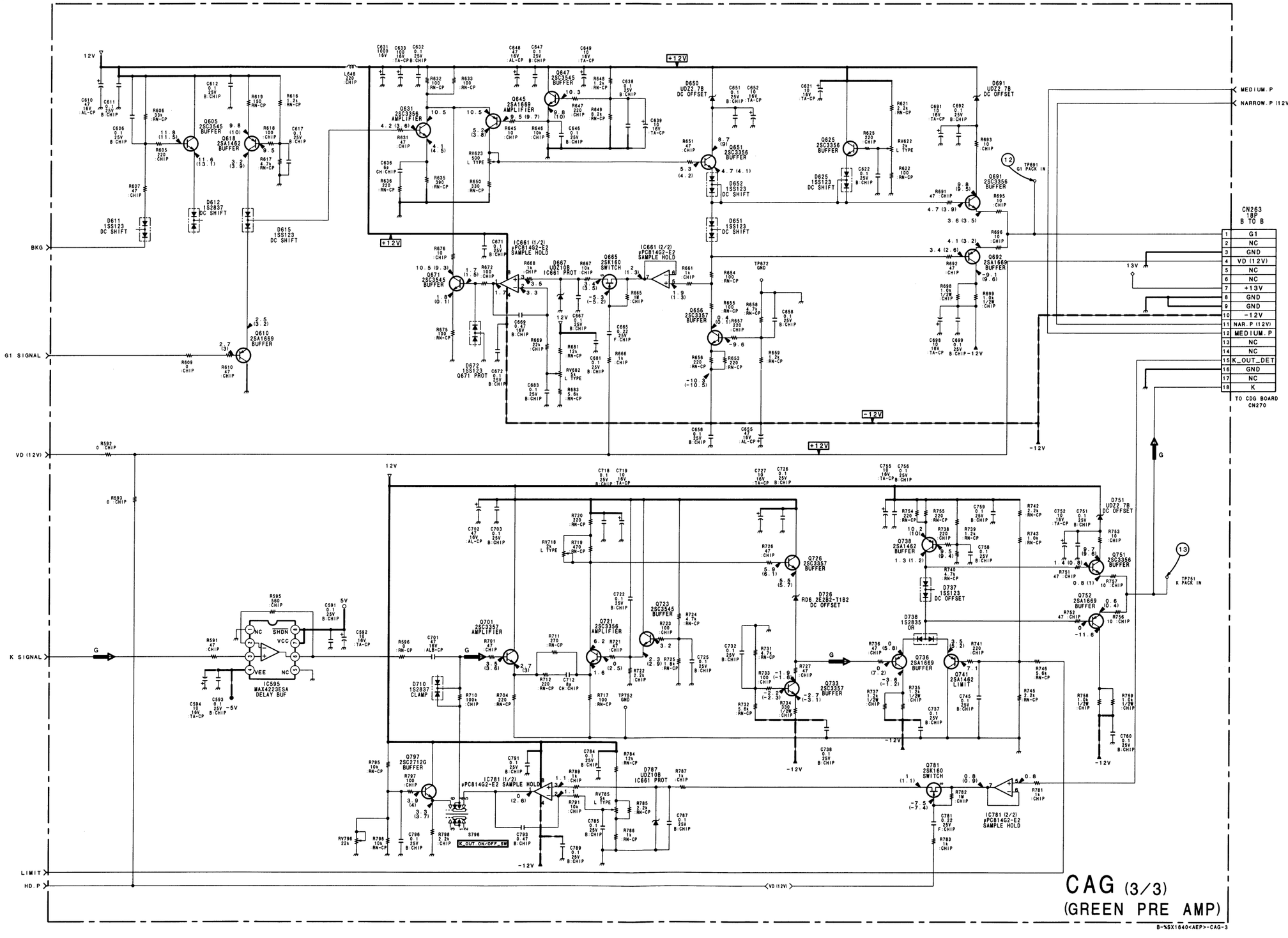
BKG
G1 SIGNAL
VD (12V)
K SIGNAL
LIMIT
HD.P
MEDIUM.P
NARROW.P (12V)
13V
CN263
18P
B TO B
G1
NC
GND
VD (12V)
NC
NC
+13V
GND
GND
-12V
NAR.P (12V)
MEDIUM.P
NC
NC
K_OUT_DET
GND
NC
K
TO CDG BOARD
CN270
TP661
G1 PACK IN
TP751
K PACK IN
IC595
MAX4229ESA
DELAY BUF
IC661 (1/2)
μPC814G2-E2
SAMPLE HOLD
IC661 (2/2)
μPC814G2-E2
SAMPLE HOLD
IC781 (1/2)
μPC814G2-E2
SAMPLE HOLD
IC781 (2/2)
μPC814G2-E2
SAMPLE HOLD
K_OUT ON/OFF_SW
CAG (3/3)
(GREEN PRE AMP)
B-%SX1840<AEP>-CAG-3

CAG BOARD (2/3) IC570
TC4W53FU

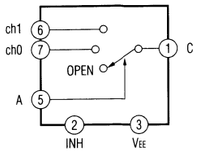

CBG BOARD

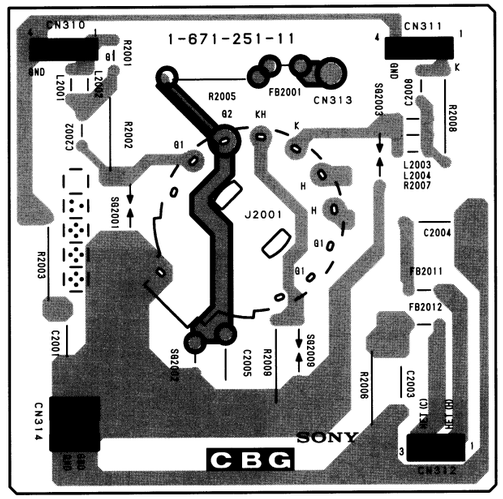

CBG -A SIDE-
SUFFIX: -11

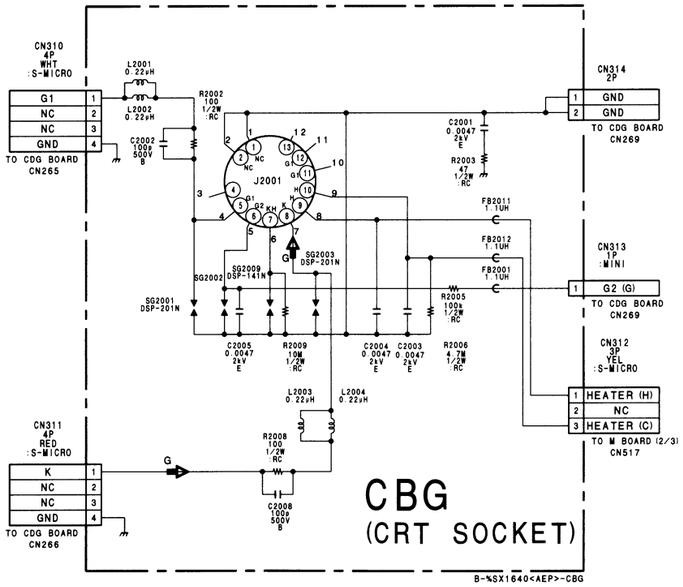

CDG BOARD

CDG BOARD (A SIDE)

D811	B-2
D812	C-2
D832	D-2
D833	D-2
D841	D-2
D842	D-2
D851	B-3
D861	C-3
D941	C-5
D942	C-5
D961	D-4
D965	C-3
D1211	D-5
D1215	D-5
IC801	C-1
IC851	B-3
IC861	C-3
IC901	B-5
IC961	D-4
IC971	D-3
IC981	C-3
IC1211	D-5
Q819	D-1
Q821	E-1
Q948	D-4
Q961	D-3
Q1204	E-5
Q1210	E-6
RV965	C-4
RV1223	D-5

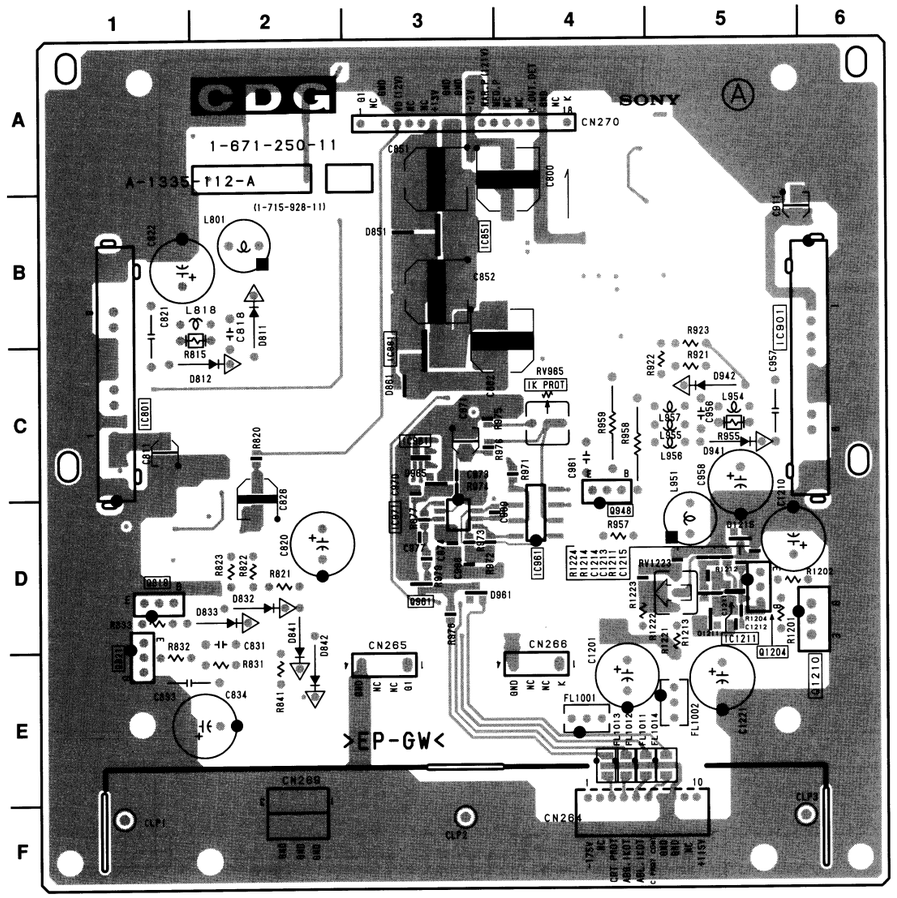

CDG -A SIDE-
SUFFIX: -11

CDG BOARD (B SIDE)

D801	A-4
D806	A-5
D811	B-5
D812	C-5
D820	C-5
D821	C-5
D831	E-5
D832	D-5
D833	D-5
D841	D-4
D842	E-4
D901	A-2
D906	A-2
D941	C-2
D942	C-2
D945	D-2
D955	B-2
D956	B-2
D960	D-3
D981	C-3
D982	C-3
D1001	D-3
IC801	B-5
IC802	D-5
IC901	C-1
IC902	B-2
IC990	C-3
IC998	C-3
Q801	A-4
Q802	A-4
Q806	A-4
Q807	A-4
Q815	D-5
Q819	D-6
Q821	E-6
Q901	B-3
Q902	A-2
Q906	A-2
Q907	B-2
Q948	C-2
Q974	B-3
Q1204	D-1
Q1210	D-1
RV965	C-3
RV1223	D-2
TP810	D-6
TP811	C-6
TP891	D-4
TP910	C-1
TP911	B-3
TP912	A-1
TP951	B-5
TP981	B-3
TP982	B-3
TP991	D-3
TP1201	D-2

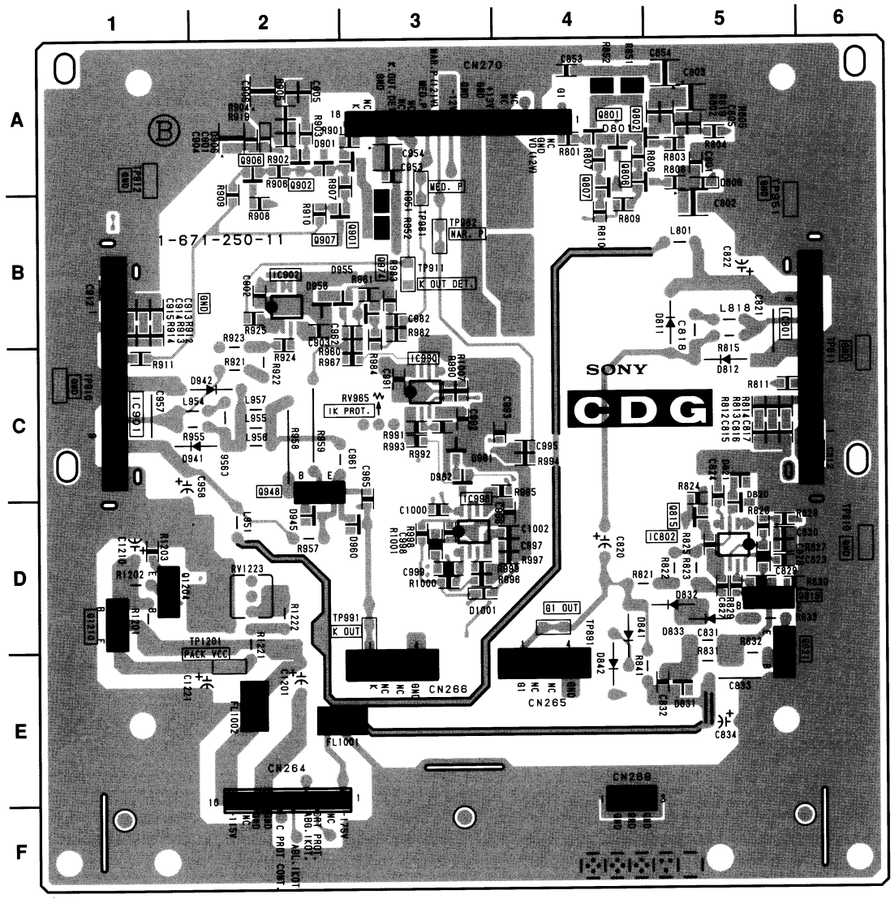

CDG -B SIDE-
SUFFIX: -11

CDG BOARD WAVEFORMS

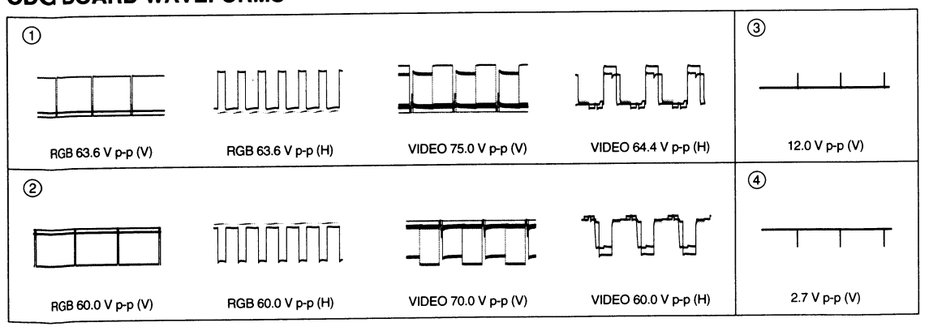

CDG BOARD

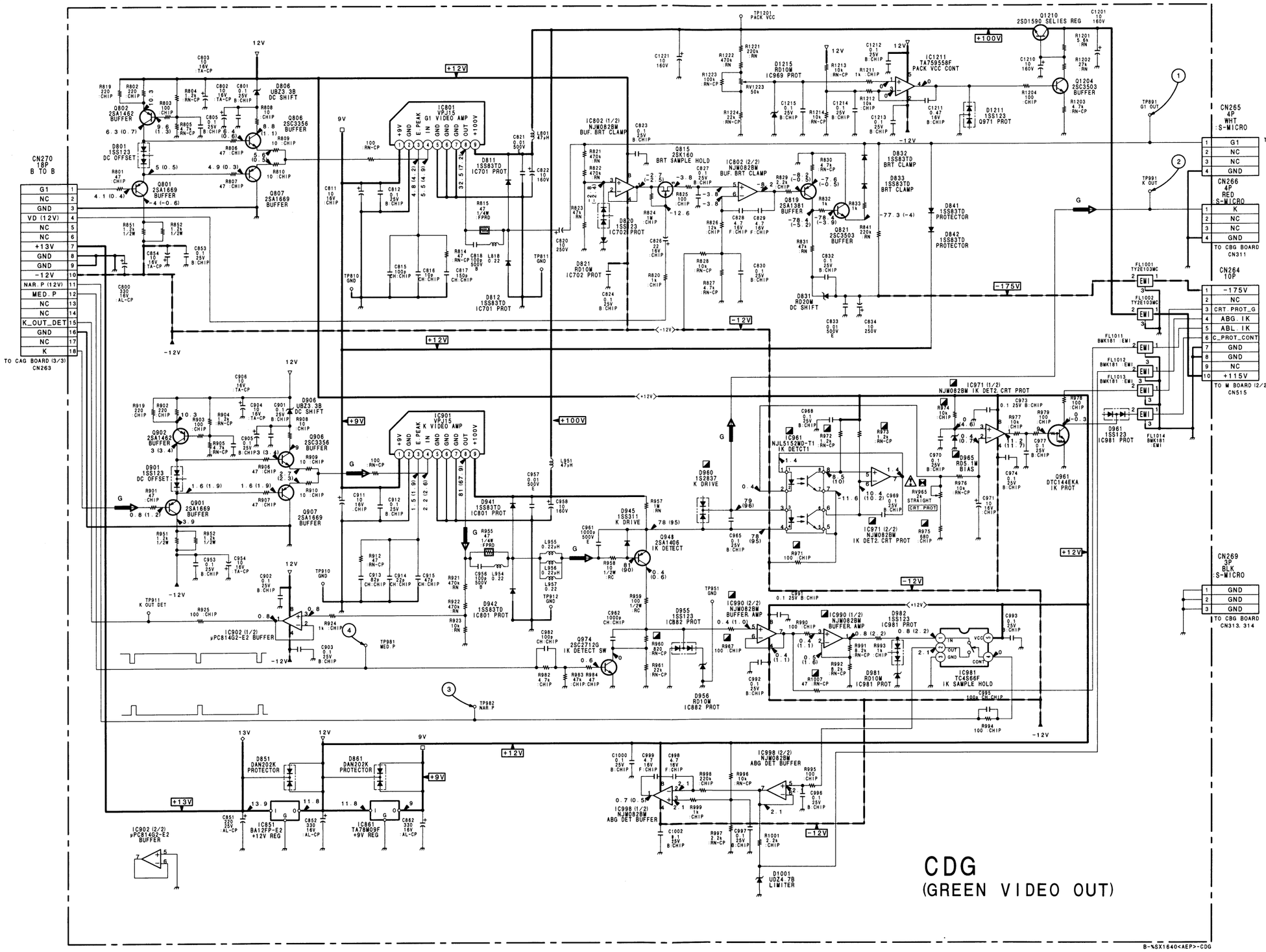
CN270
18P
B TO B
TO CAG BOARD (3/3)
CN263
CN265
4P
WHT
S-MICRO
TO CBG BOARD
CN310
CN266
4P
RED
S-MICRO
TO CBG BOARD
CN311
CN264
10P
TO M BOARD (2/2)
CN515
CN269
3P
BLK
S-MICRO
TO CBG BOARD
CN313, 314
CDG
(GREEN VIDEO OUT)

CAR BOARD (A SIDE)

D12	E-5
D13	D-4
D22	C-5
D24	C-4
D121	C-2
D155	C-2
D501	C-2
D511	B-2
D512	B-3
D581	C-3
D651	A-4
D652	A-4
D672	B-4
D726	A-1
D737	A-2
D738	A-2
D761	A-2
IC12	D-4
IC22	C-5
IC24	C-4
IC101	D-4
IC102	D-2
IC141	D-2
IC171	C-3
IC560	B-4
IC570	B-3
IC595	B-3
IC781	B-1
IC861	A-5
Q121	C-2
Q133	C-2
Q441	D-3
Q446	D-2
Q447	D-3
Q450	C-1
Q451	D-1
Q457	C-1
Q501	C-2
Q510	C-2
Q511	B-3
Q551	B-3
Q581	B-3
Q640	C-3
Q656	A-4
Q671	B-4
Q692	A-3
Q701	B-2
Q721	B-2
Q726	B-2
Q733	B-1
Q736	A-2
Q738	A-2
Q751	A-2
Q797	C-1
RV145	D2
RV622	B-4
RV623	B-4
RV682	A-5
RV718	B-2
RV785	B-1
RV796	C-1
TP21	D-3
TP22	D-3
TP23	D-4
TP24	D-4
TP34	D-3
TP35	D-3
TP71	C-4
TP72	C-4
TP73	C-4
TP101	E-3
TP501	C-2
TP511	B-2
TP672	A-3
TP691	A-4
TP751	A-2

CAR BOARD

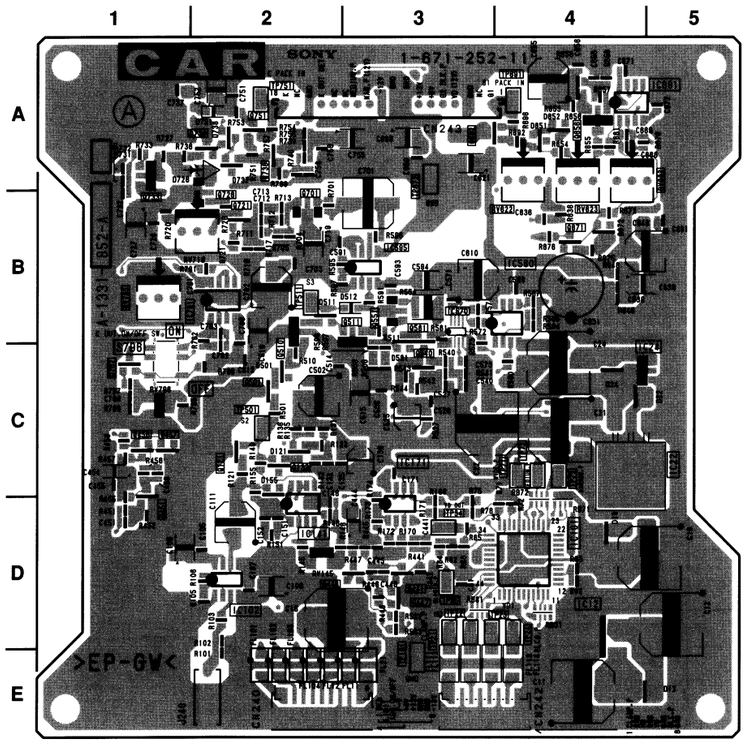

CAR -A SIDE-
SUFFIX: -11

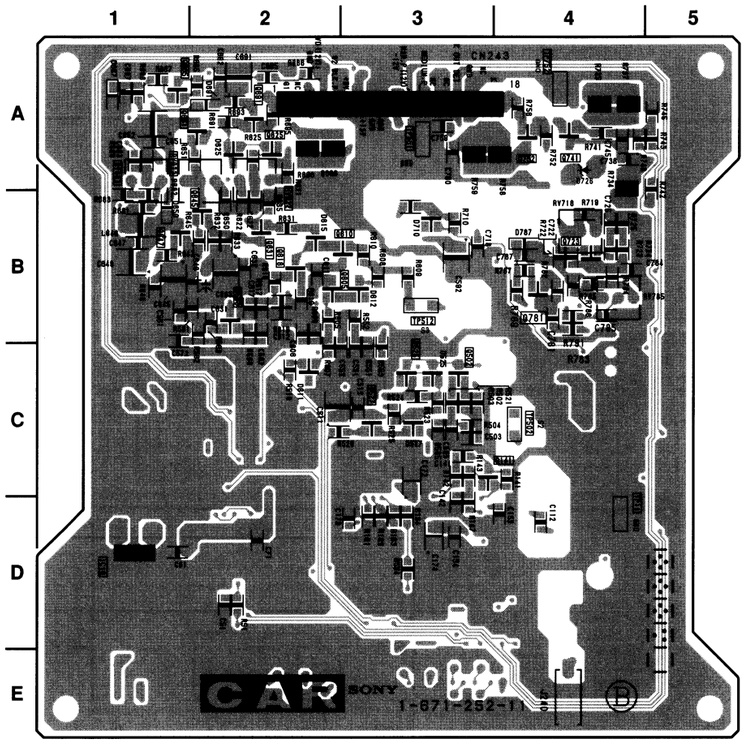

CAR -B SIDE-
SUFFIX: -11

CAR BOARD (B SIDE)

D525	C-3
D527	C-3
D611	C-2
D612	B-3
D615	B-2
D625	A-2
D650	B-1
D667	A-1
D691	A-2
D710	B-3
D726	A-4
D787	B-4
IC18	D-1
Q141	C-4
Q502	C-3
Q525	C-3
Q527	C-3
Q563	B-2
Q605	B-3
Q610	B-3
Q618	B-2
Q625	A-2
Q631	B-2
Q641	A-1
Q645	B-2
Q647	B-1
Q691	A-2
Q695	A-1
Q723	B-4
Q751	A-4
Q752	A-4
Q781	B-4
RV622	B-2
RV623	A-1
RV682	A-1
RV718	B-4
RV785	B-5
TP11	D-4
TP502	C-4
TP512	B-3
TP551	A-3
TP752	A-4

CAR BOARD WAVEFORMS

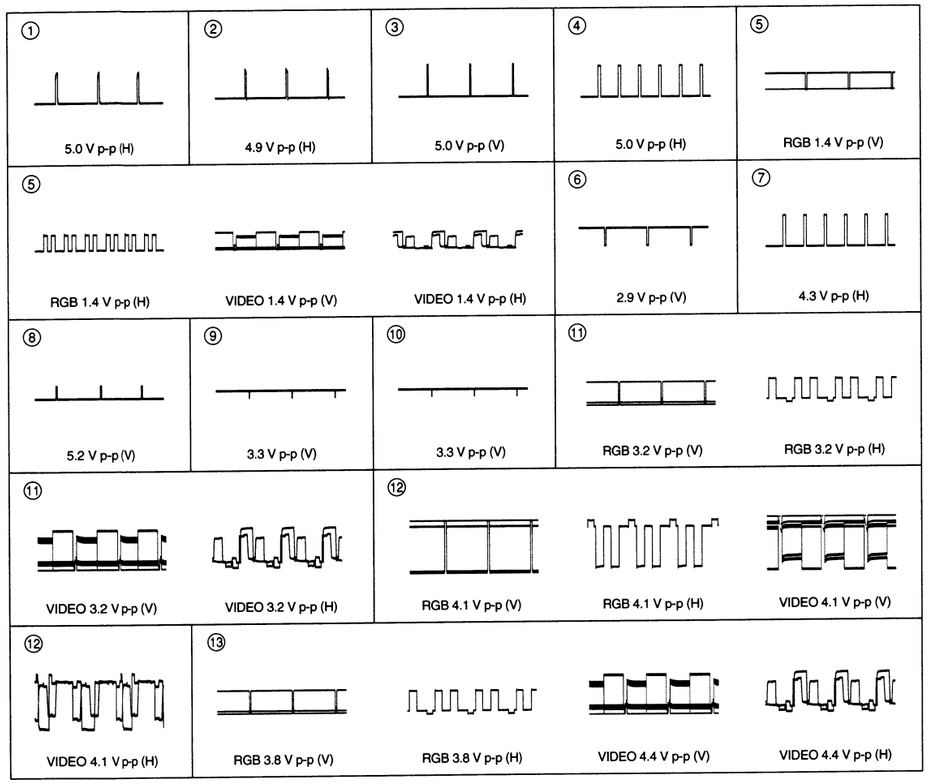

10-147

CAR (1/3) BOARD

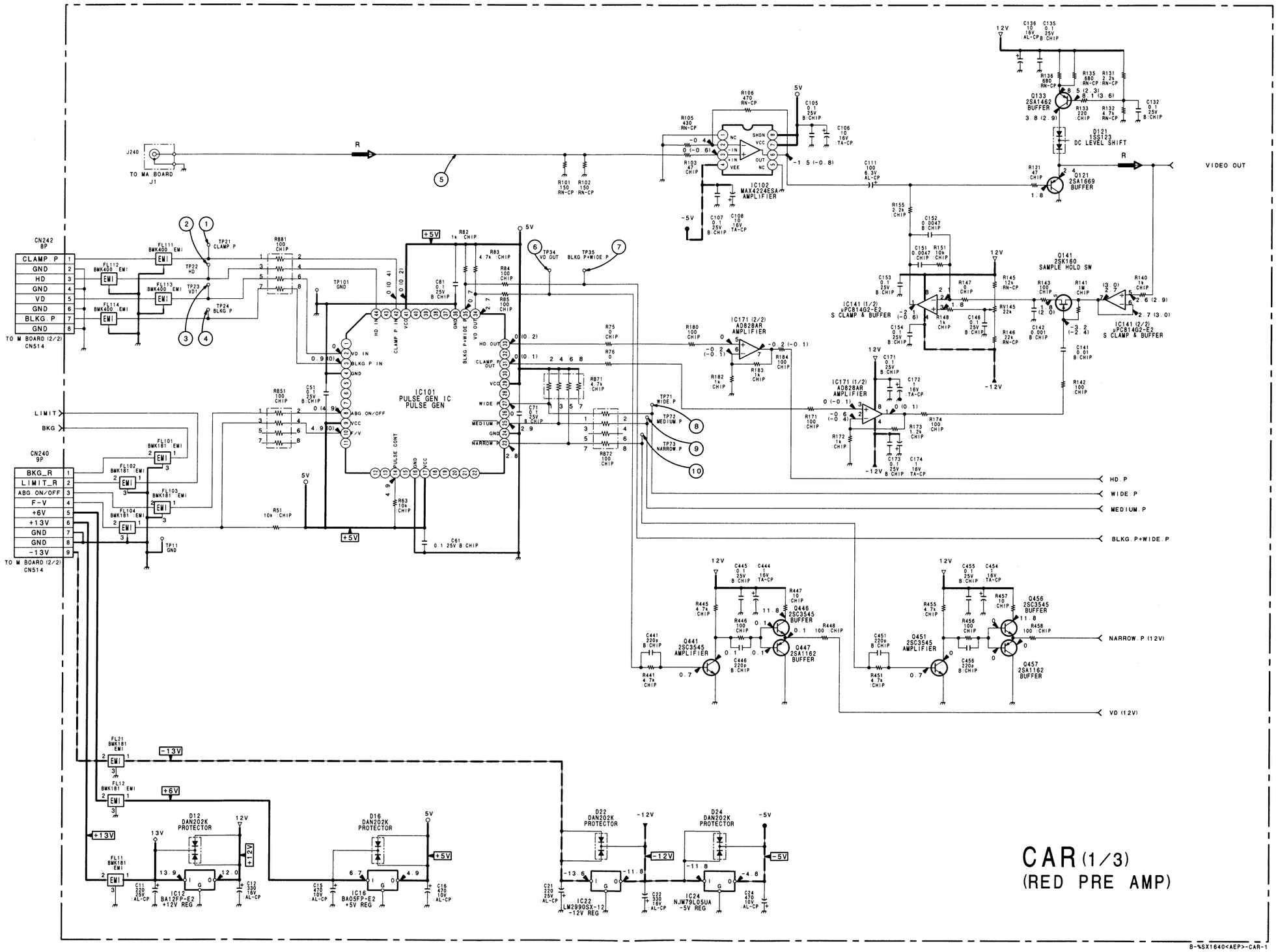
CN242
8P
CLAMP P
GND
HD
GND
VD
GND
BLKG P
GND
TO M BOARD (2/2)
CN514
CN240
9P
BKG_R
LIMIT_R
ABG ON/OFF
F-V
+6V
+13V
GND
GND
-13V
TO M BOARD (2/2)
CN514
LIMIT
BKG
IC101
PULSE GEN IC
PULSE GEN
IC102
MAX4224ESA
AMPLIFIER
IC171 (2/2)
AD828AR
AMPLIFIER
IC171 (1/2)
AD828AR
AMPLIFIER
IC141 (1/2)
μPC814G2-E2
S CLAMP & BUFFER
IC141 (2/2)
μPC814G2-E2
S CLAMP & BUFFER
Q141
2SK160
SAMPLE HOLD SW
Q133
2SA1462
BUFFER
D121
1SS123
DC LEVEL SHIFT
Q121
2SA1669
BUFFER
VIDEO OUT
HD.P
WIDE.P
MEDIUM.P
BLKG.P+WIDE.P
NARROW.P (12V)
VD (12V)
Q441
2SC3545
AMPLIFIER
Q446
2SC3545
BUFFER
Q447
2SA1162
BUFFER
Q451
2SC3545
AMPLIFIER
Q456
2SC3545
BUFFER
Q457
2SA1162
BUFFER
D12
DAN202K
PROTECTOR
IC12
BA12FP-E2
+12V REG
D16
DAN202K
PROTECTOR
IC16
BA05FP-E2
+5V REG
D22
DAN202K
PROTECTOR
IC22
LM2990SX-12
-12V REG
D24
DAN202K
PROTECTOR
IC24
NJM79L05UA
-5V REG
CAR (1/3)
(RED PRE AMP)
B-%SX1640<AEP>-CAR-1

 CAR (2/3)

CAR (2/3) BOARD

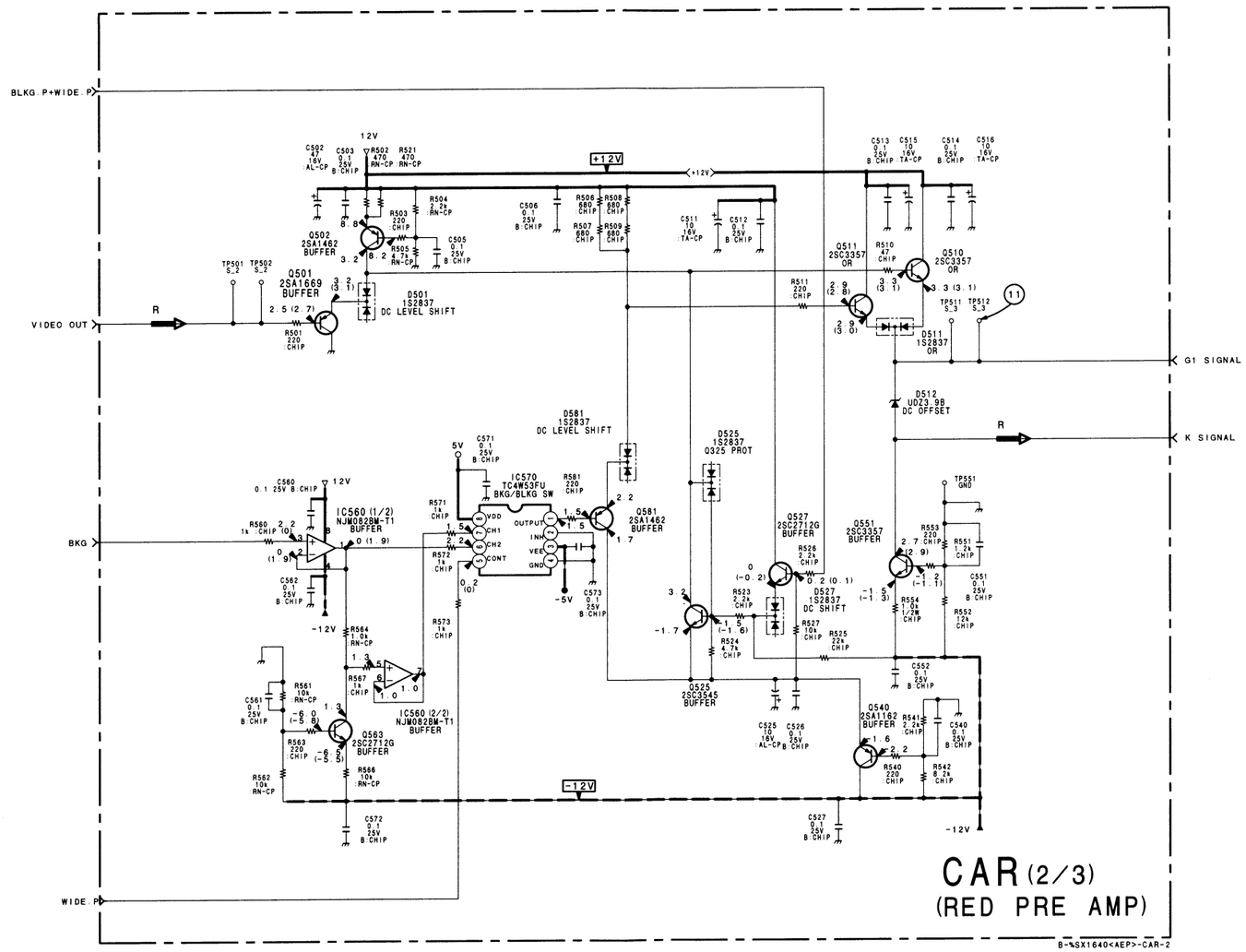

 10-149

CAR (2/3) BOARD

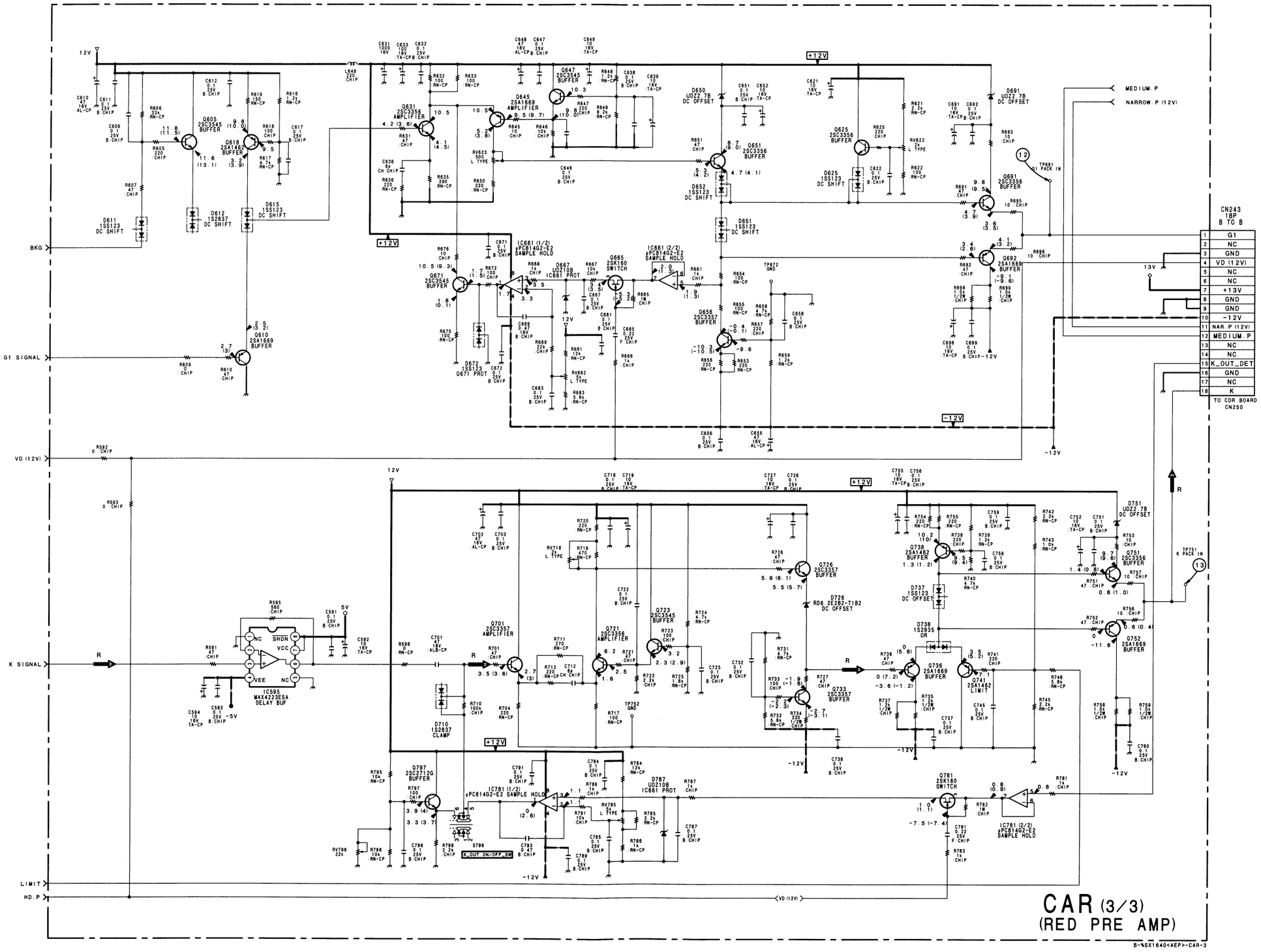
CAR (3/3)
(RED PRE AMP)
CN243
18P
B TO B
TO CDR BOARD
CN250
BKG
G1 SIGNAL
VD (12V)
K SIGNAL
LIMIT
HD.P
MEDIUM.P
NARROW.P (12V)
IC595
MAX4223ESA
DELAY BUF
IC661 (1/2)
μPC814G2-E2
SAMPLE HOLD
IC661 (2/2)
μPC814G2-E2
SAMPLE HOLD
IC781 (1/2)
μPC814G2-E2 SAMPLE HOLD
IC781 (2/2)
μPC814G2-E2
SAMPLE HOLD
K_OUT_ON/OFF_SW
B-%SX1640<AEP>-CAR-3

CAR BOARD (2/3) IC570
TC4W53FU

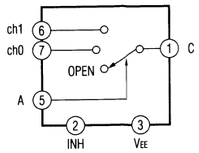

CBR BOARD

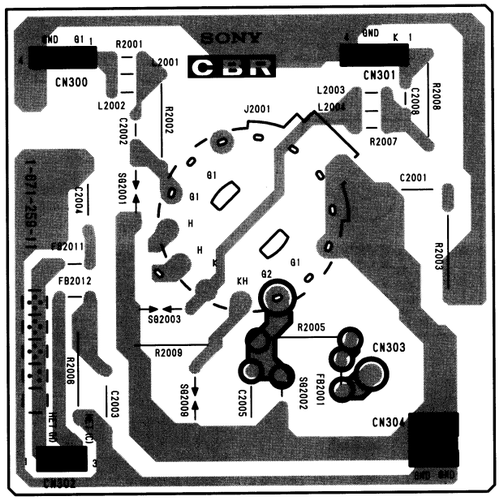

CBR -B SIDE-
SUFFIX: -11

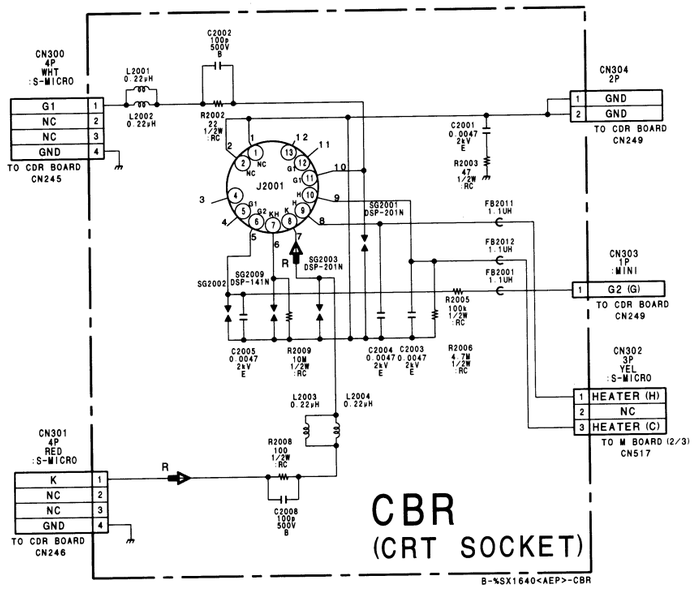

CDR BOARD

CDR BOARD (A SIDE)

D811	B-2
D812	C-2
D832	D-2
D833	D-2
D841	D-2
D842	E-2
D851	B-3
D861	C-3
D941	C-5
D942	C-5
D961	D-4
D965	C-3
D1211	D-5
D1215	D-5
IC801	C-1
IC851	B-3
IC861	C-3
IC901	B-5
IC961	D-4
IC971	D-3
IC981	C-3
IC1211	D-5
Q819	D-1
Q821	E-1
Q948	D-4
Q961	D-3
Q1204	E-5
Q1210	E-6
RV965	C-4
RV1223	D-5

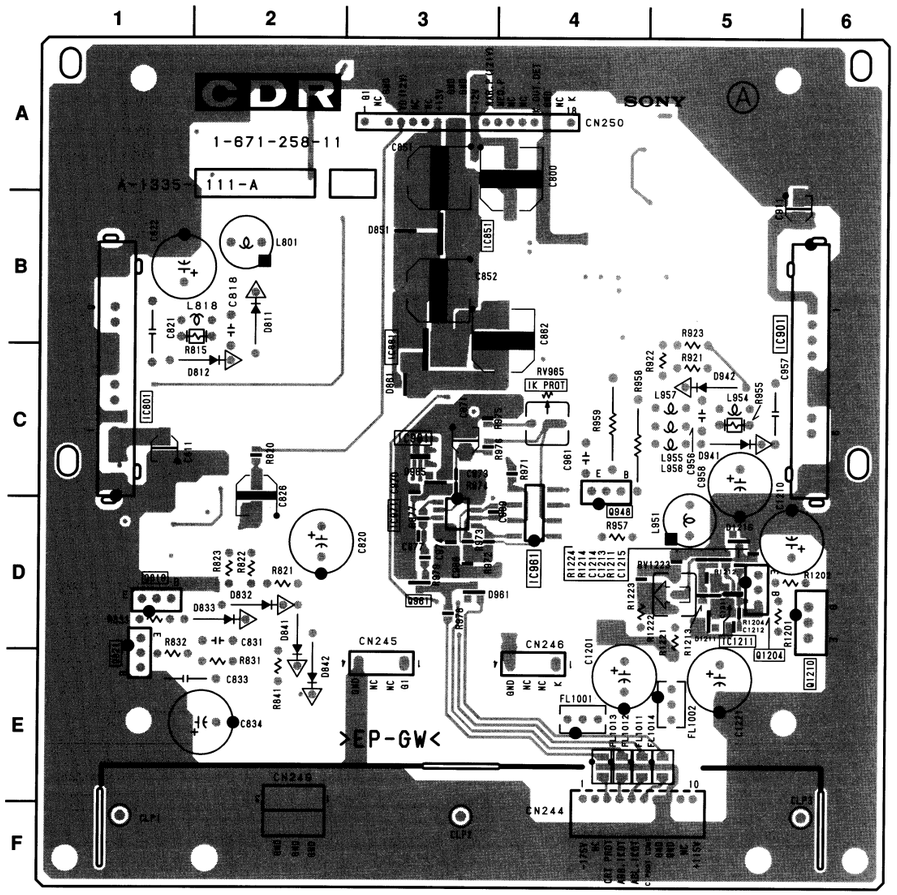

CDR -A SIDE-
SUFFIX: -11

CDR BOARD (B SIDE)

D801	A-4
D806	A-5
D811	B-5
D812	C-5
D820	C-5
D821	C-5
D831	E-5
D832	D-5
D833	D-5
D841	D-4
D842	E-4
D901	A-2
D906	A-2
D941	C-2
D942	C-2
D945	D-2
D955	B-2
D956	B-2
D960	D-3
D981	C-3
D982	C-3
D1001	D-3
IC801	B-5
IC802	D-5
IC901	C-1
IC902	B-2
IC990	C-3
IC998	C-3
Q801	A-4
Q802	A-4
Q806	A-4
Q807	A-4
Q815	D-5
Q819	D-6
Q821	D-6
Q901	B-3
Q902	A-2
Q906	A-2
Q907	B-2
Q948	C-2
Q974	B-3
Q1204	D-1
Q1210	E-1
RV965	C-3
RV1223	D-2
TP810	D-6
TP811	C-6
TP891	D-4
TP910	C-1
TP911	B-3
TP912	A-1
TP951	B-5
TP981	A-3
TP982	B-3
TP991	D-3
TP1201	D-2

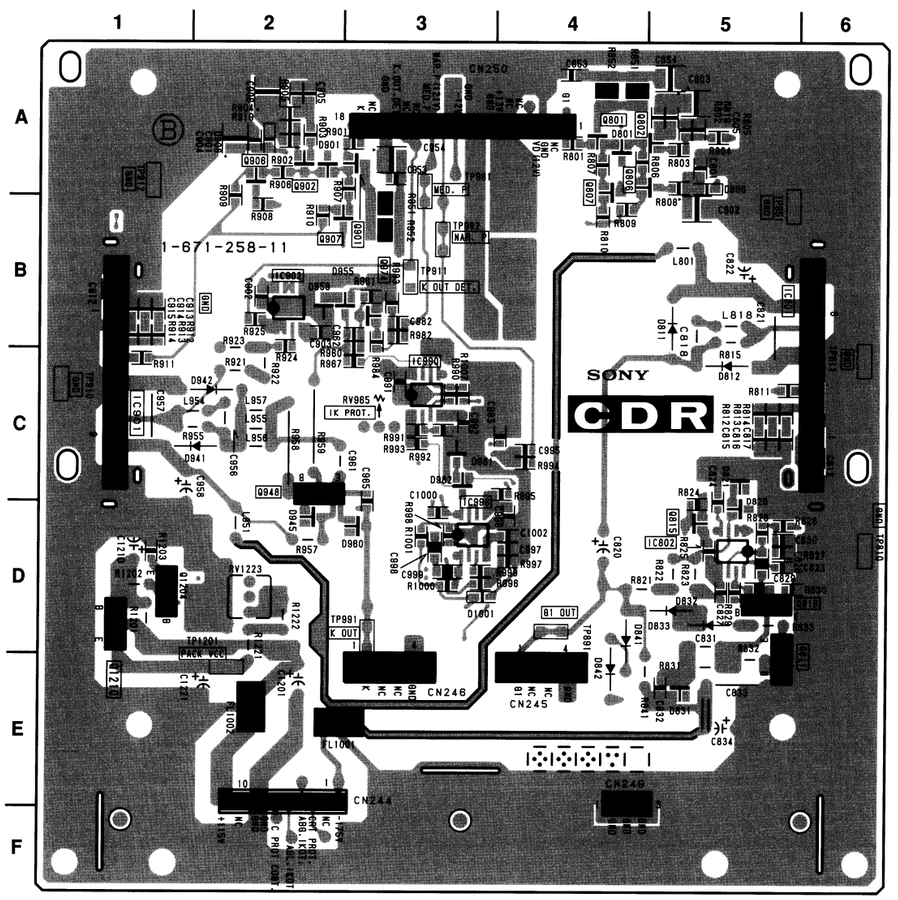

CDR -B SIDE-
SUFFIX: -11

CDR BOARD WAVEFORMS

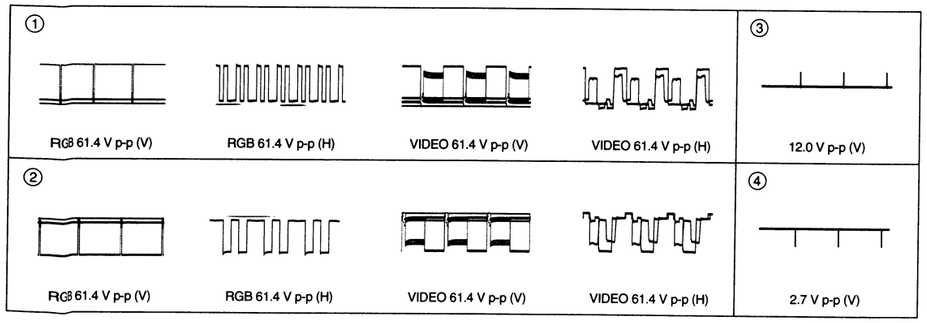

CDR BOARD

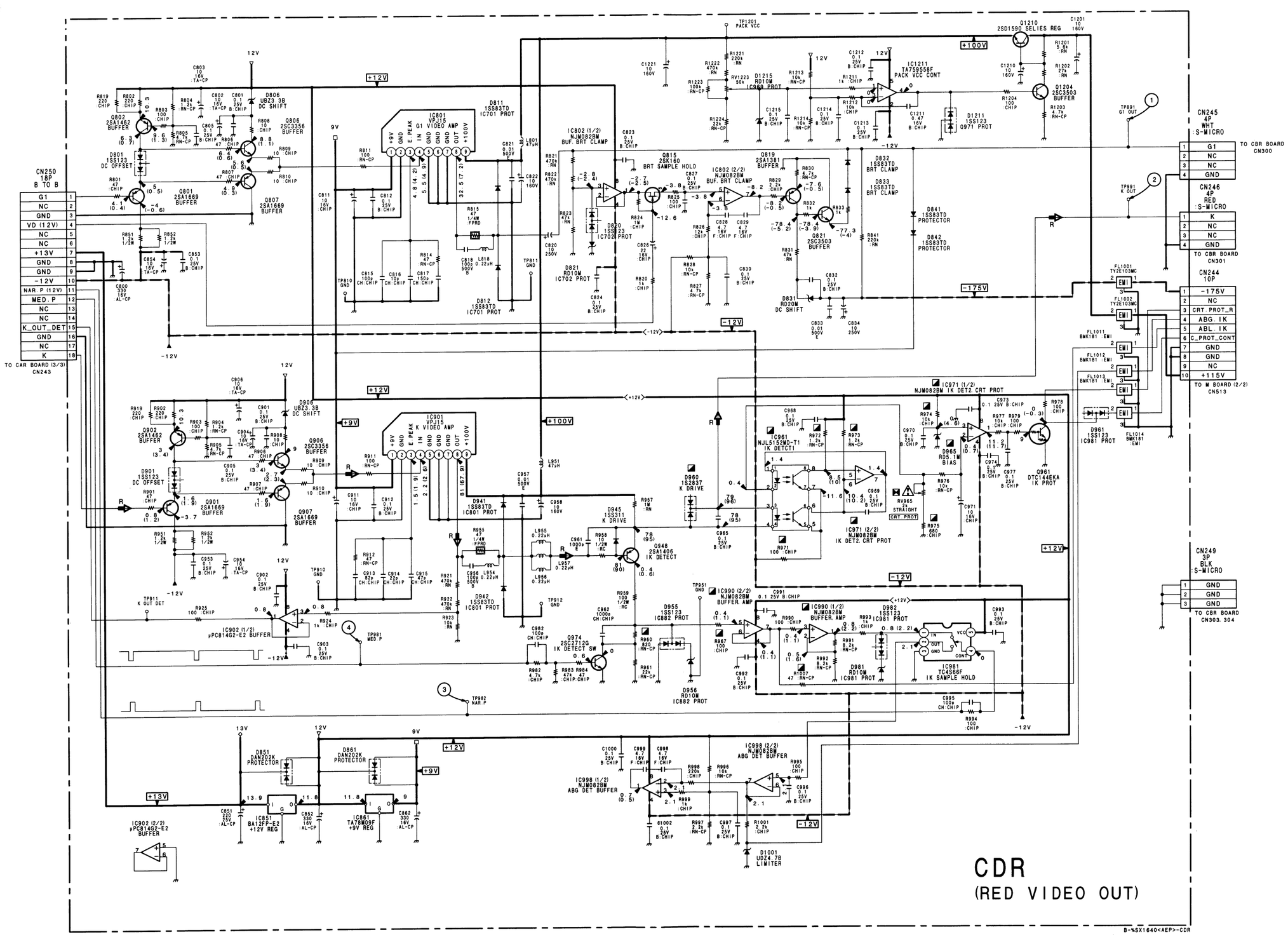
CN250
18P
B TO B
TO CAR BOARD (3/3)
CN243
CN245
4P
WHT
S-MICRO
TO CBR BOARD
CN300
CN246
4P
RED
S-MICRO
TO CBR BOARD
CN301
CN244
10P
TO M BOARD (2/2)
CN513
CN249
3P
BLK
S-MICRO
TO CBR BOARD
CN303, 304
CDR
(RED VIDEO OUT)
B-%SX1640<AEP>-CDR

F F

F BOARD

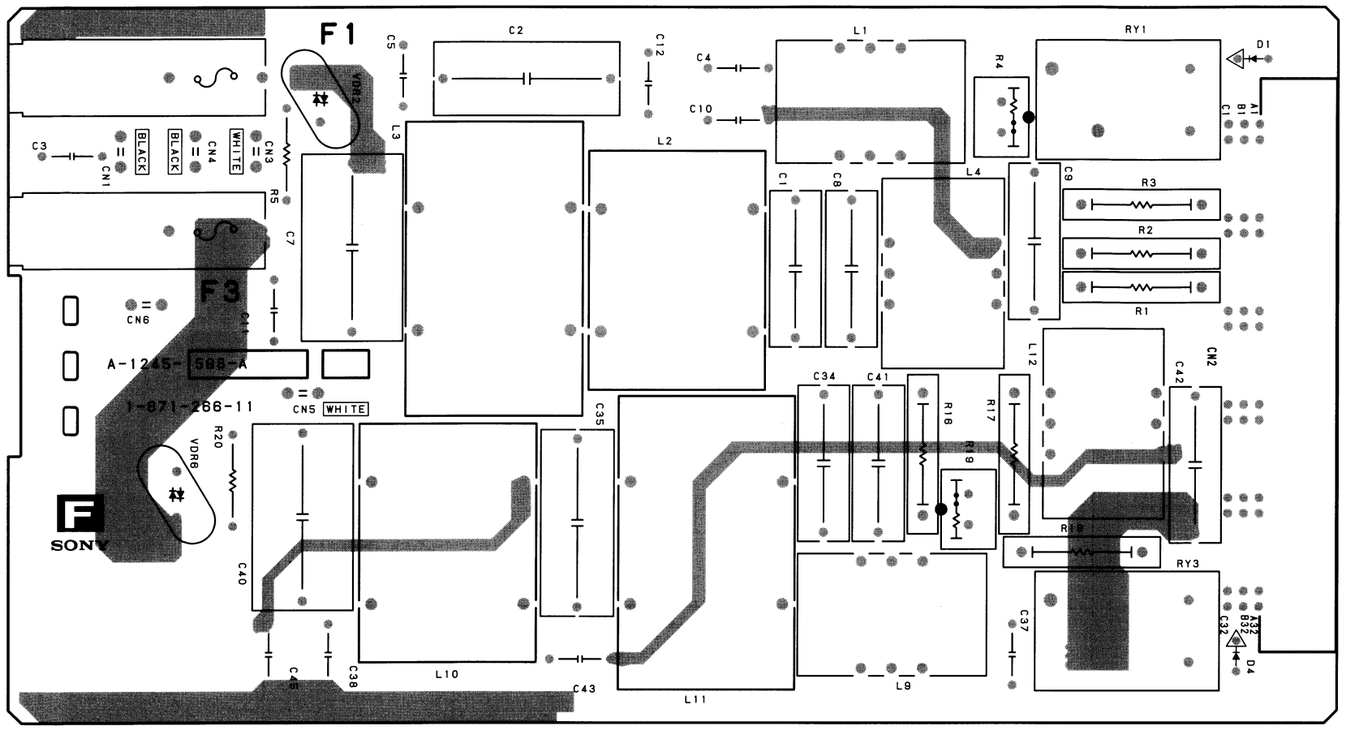

F -A SIDE-
SUFFIX: -11

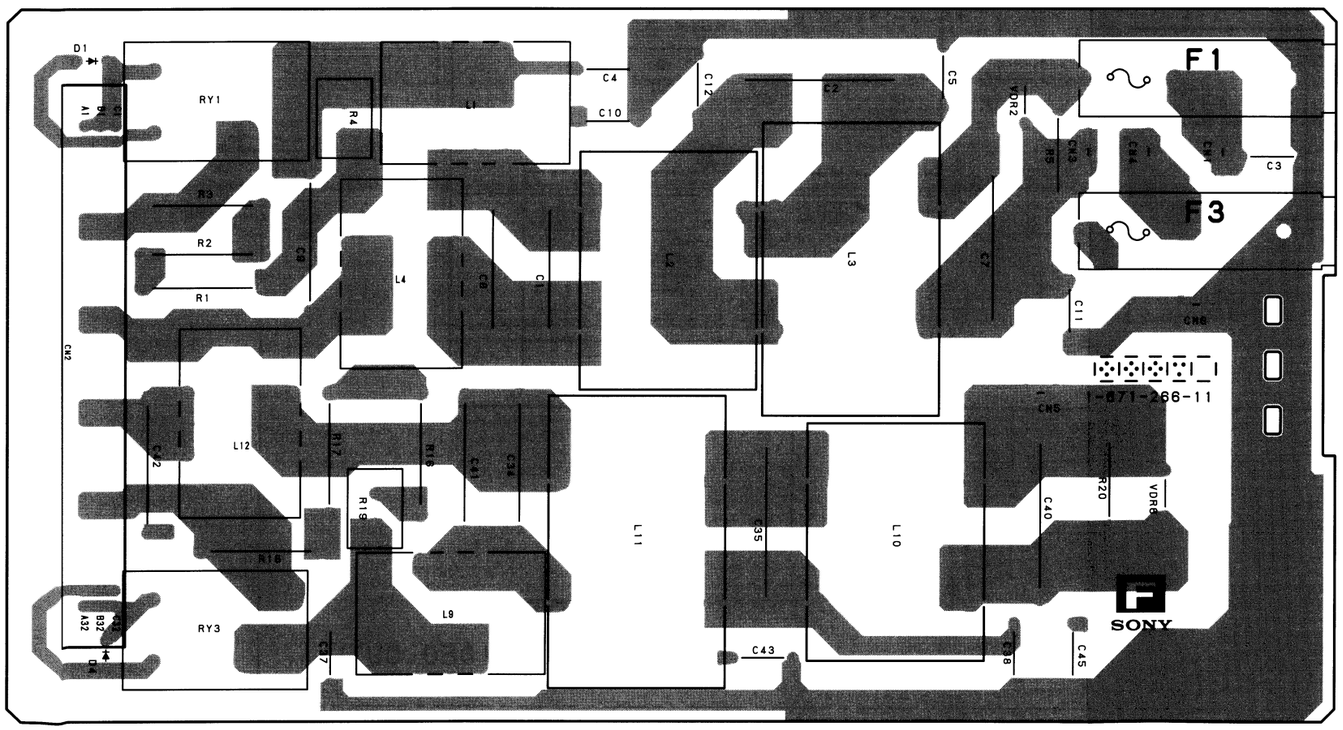

F -B SIDE-
SUFFIX: -11

F BOARD

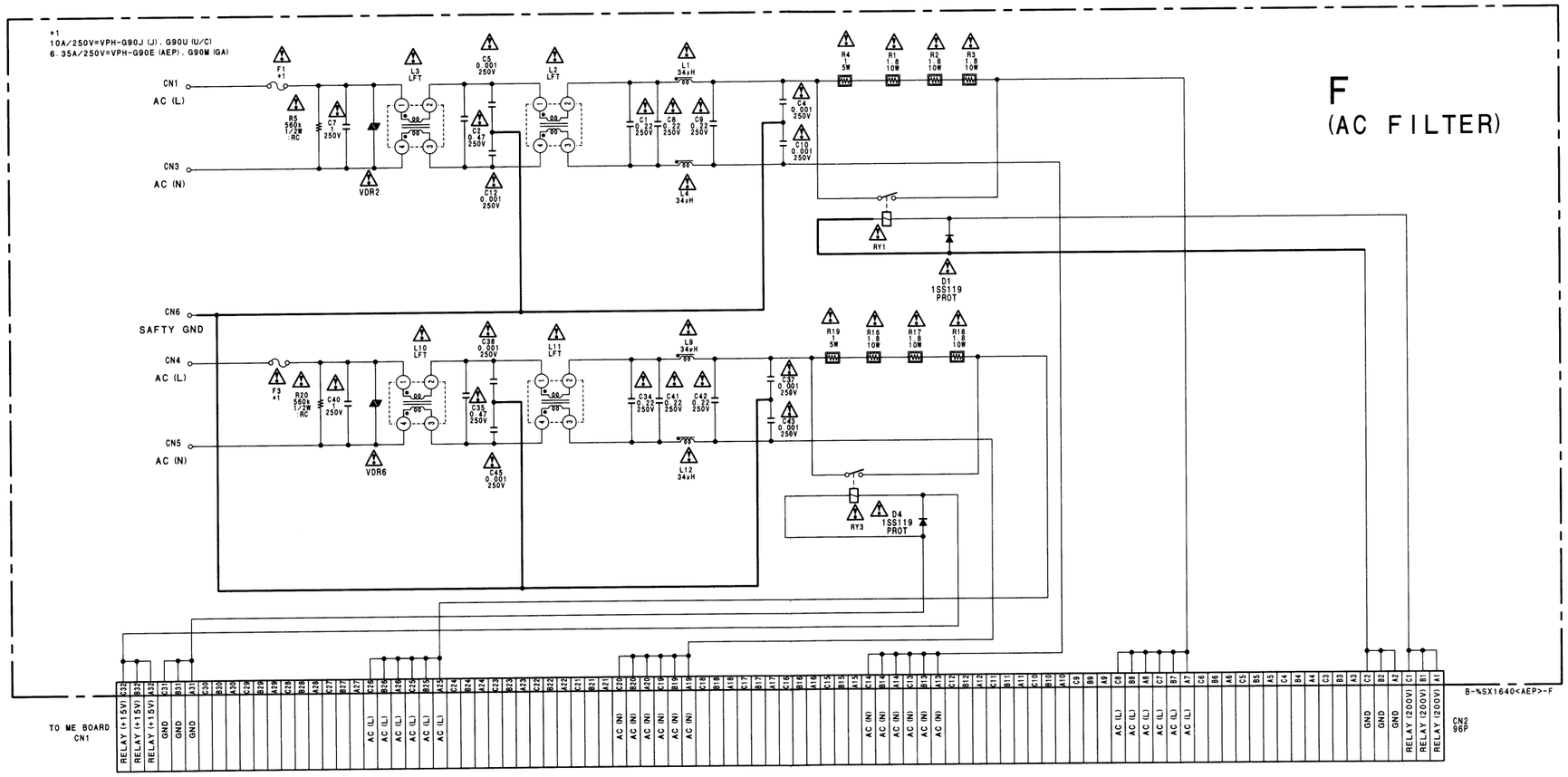
*1
10A/250V=VPH-G90J (J), G90U (U/C)
6.35A/250V=VPH-G90E (AEP), G90M (GA)
F
(AC FILTER)
CN1
AC (L)
CN3
AC (N)
CN6
SAFTY GND
CN4
AC (L)
CN5
AC (N)
F1
*1
F3
*1
R5
560k
1/2W
:RC
R20
560k
1/2W
:RC
C7
1
250V
C40
1
250V
VDR2
VDR6
L3
LFT
L2
LFT
L10
LFT
L11
LFT
C5
0.001
250V
C2
0.47
250V
C12
0.001
250V
C38
0.001
250V
C35
0.47
250V
C45
0.001
250V
L1
34μH
L4
34μH
L9
34μH
L12
34μH
C1
0.22
250V
C8
0.22
250V
C9
0.22
250V
C34
0.22
250V
C41
0.22
250V
C42
0.22
250V
C4
0.001
250V
C10
0.001
250V
C37
0.001
250V
C43
0.001
250V
R4
1
5W
R1
1.8
10W
R2
1.8
10W
R3
1.8
10W
R19
1
5W
R16
1.8
10W
R17
1.8
10W
R18
1.8
10W
RY1
D1
1SS119
PROT
RY3
D4
1SS119
PROT
TO ME BOARD
CN1
RELAY (+15V)
GND
AC (L)
AC (N)
RELAY (200V)
CN2
96P
B-%SX1640<AEP>-F

GA BOARD

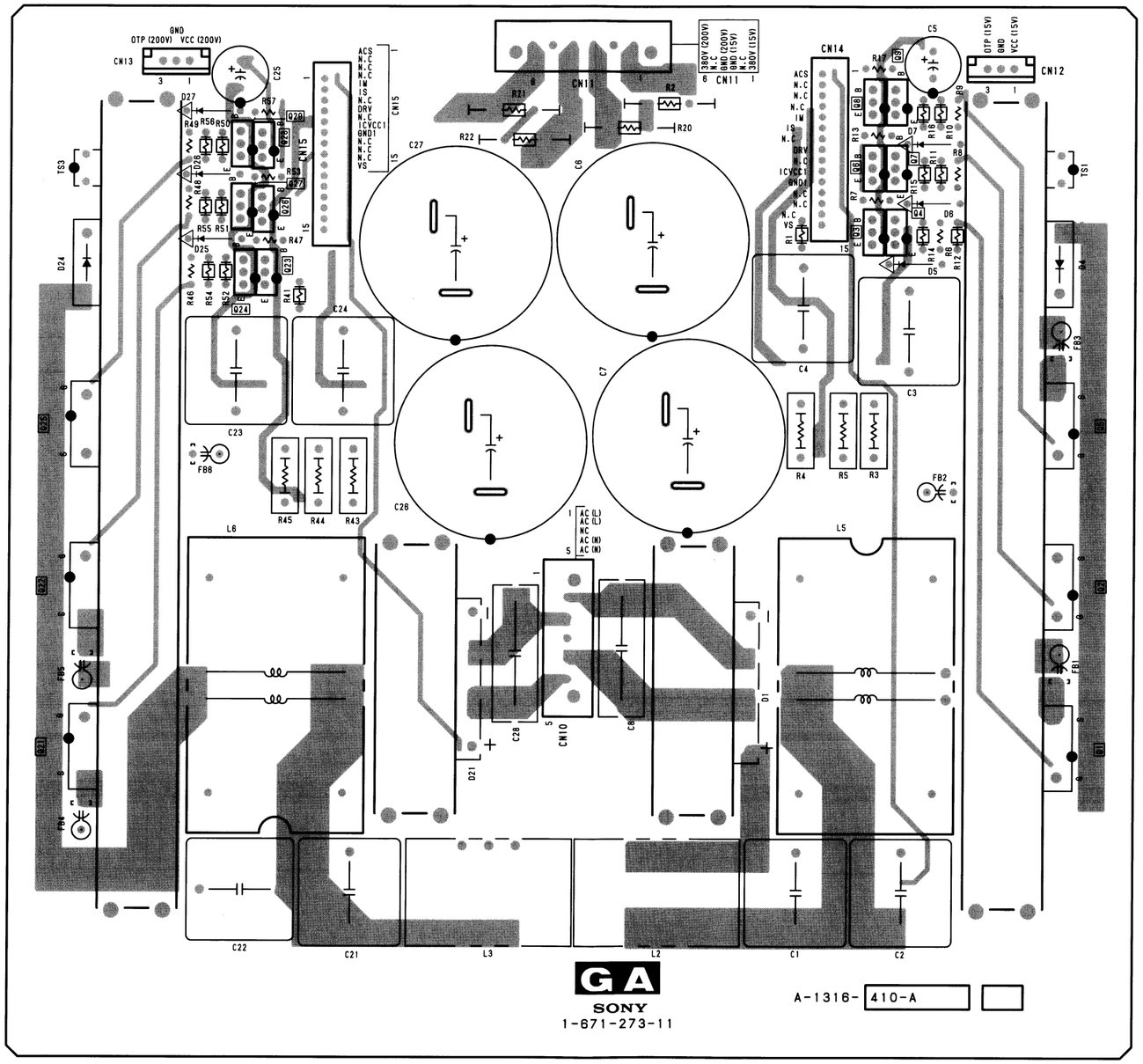

GA -A SIDE-
SUFFIX: -11

GA BOARD

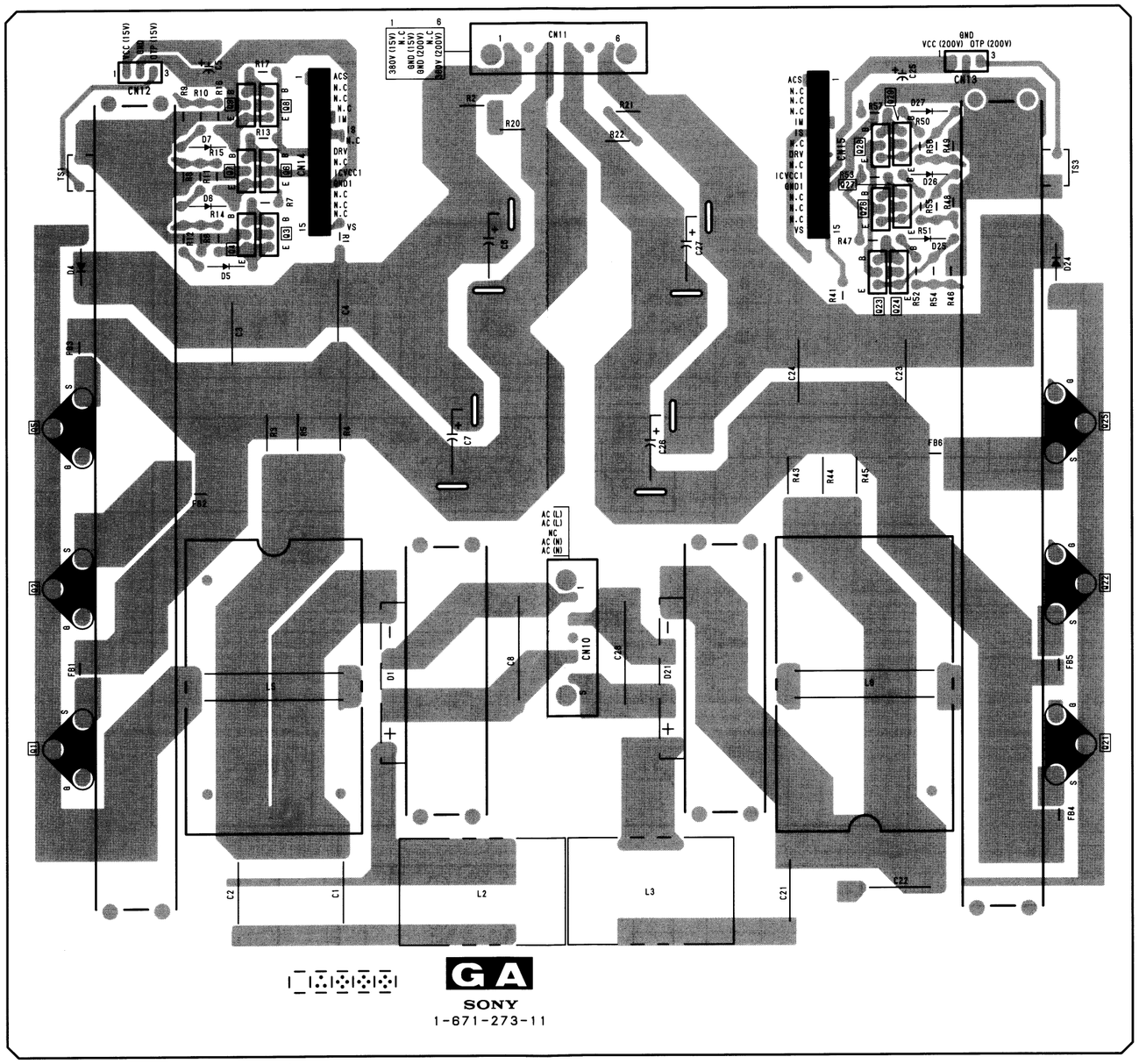

GA -B SIDE-
SUFFIX: -11

GA BOARD

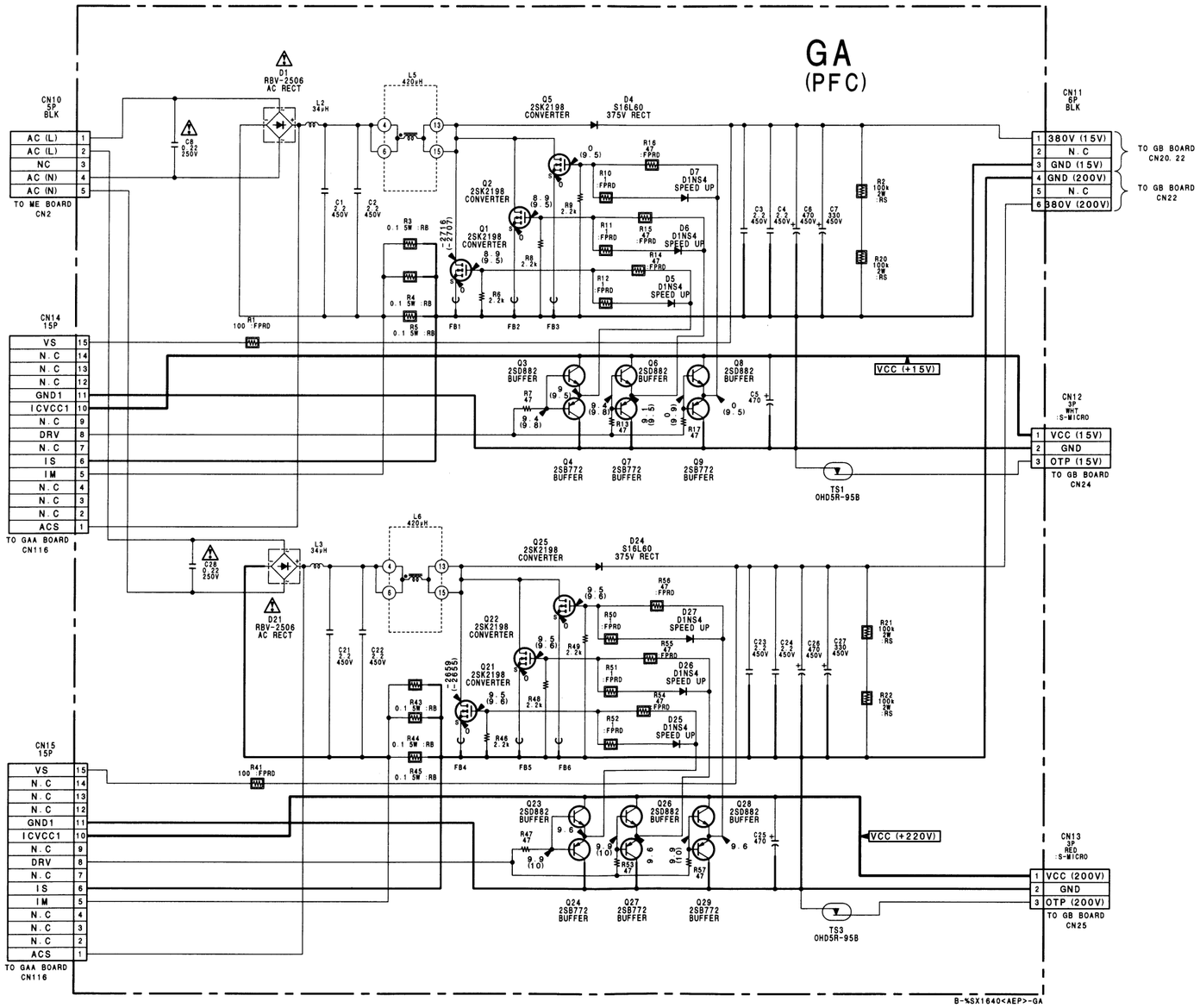
GA
(PFC)
CN10
5P
BLK
AC (L)
AC (L)
NC
AC (N)
AC (N)
TO ME BOARD
CN2
CN14
15P
VS
N.C
GND1
ICVCC1
DRV
IS
IM
ACS
TO GAA BOARD
CN116
CN15
15P
CN11
6P
BLK
380V (15V)
N.C
GND (15V)
GND (200V)
380V (200V)
TO GB BOARD
CN20, 22
TO GB BOARD
CN22
CN12
3P
WHT
:S-MICRO
VCC (15V)
GND
OTP (15V)
TO GB BOARD
CN24
CN13
3P
RED
:S-MICRO
VCC (200V)
GND
OTP (200V)
TO GB BOARD
CN25
VCC (+15V)
VCC (+220V)
D1
RBV-2506
AC RECT
D21
RBV-2506
AC RECT
Q1
2SK2198
CONVERTER
Q2
2SK2198
CONVERTER
Q5
2SK2198
CONVERTER
Q21
2SK2198
CONVERTER
Q22
2SK2198
CONVERTER
Q25
2SK2198
CONVERTER
D4
S16L60
375V RECT
D24
S16L60
375V RECT
Q3
2SD882
BUFFER
Q6
2SD882
BUFFER
Q8
2SD882
BUFFER
Q23
2SD882
BUFFER
Q26
2SD882
BUFFER
Q28
2SD882
BUFFER
Q4
2SB772
BUFFER
Q7
2SB772
BUFFER
Q9
2SB772
BUFFER
Q24
2SB772
BUFFER
Q27
2SB772
BUFFER
Q29
2SB772
BUFFER
TS1
OHD5R-95B
TS3
OHD5R-95B
B-%SX1640<AEP>-GA

GAA BOARD

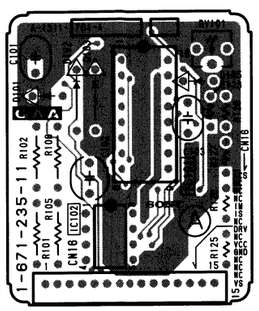

GAA -A SIDE-
SUFFIX: -11

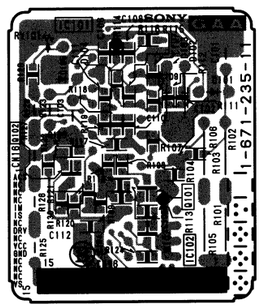

GAA -B SIDE-
SUFFIX: -11

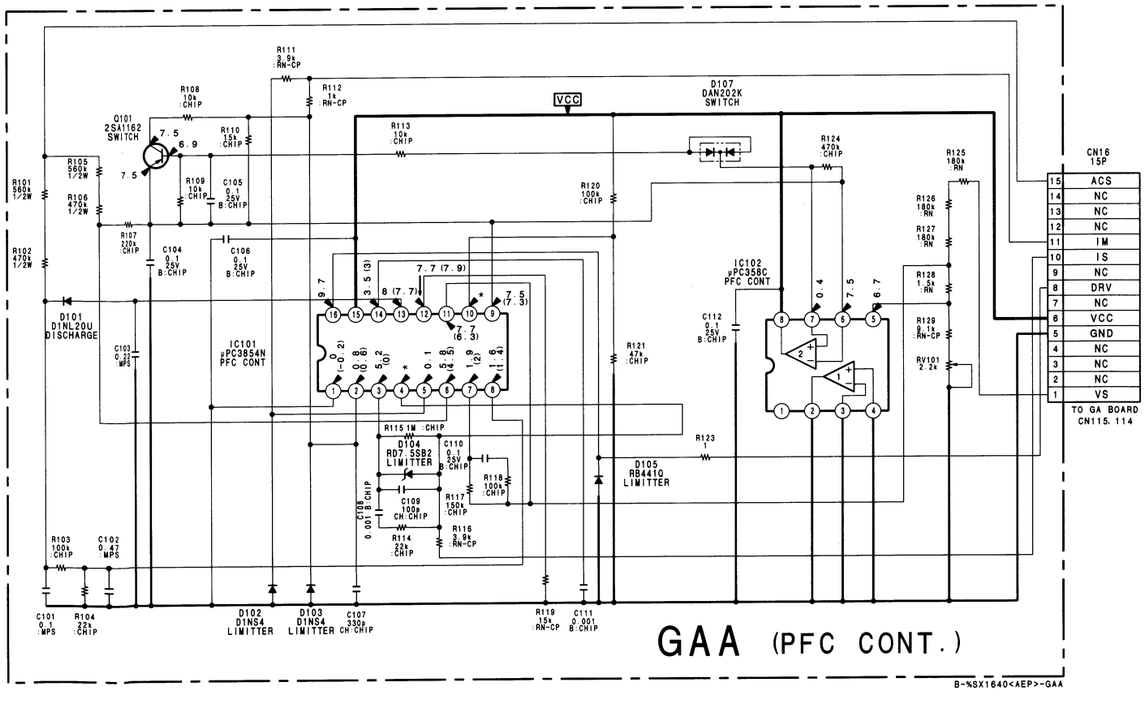

GB BOARD

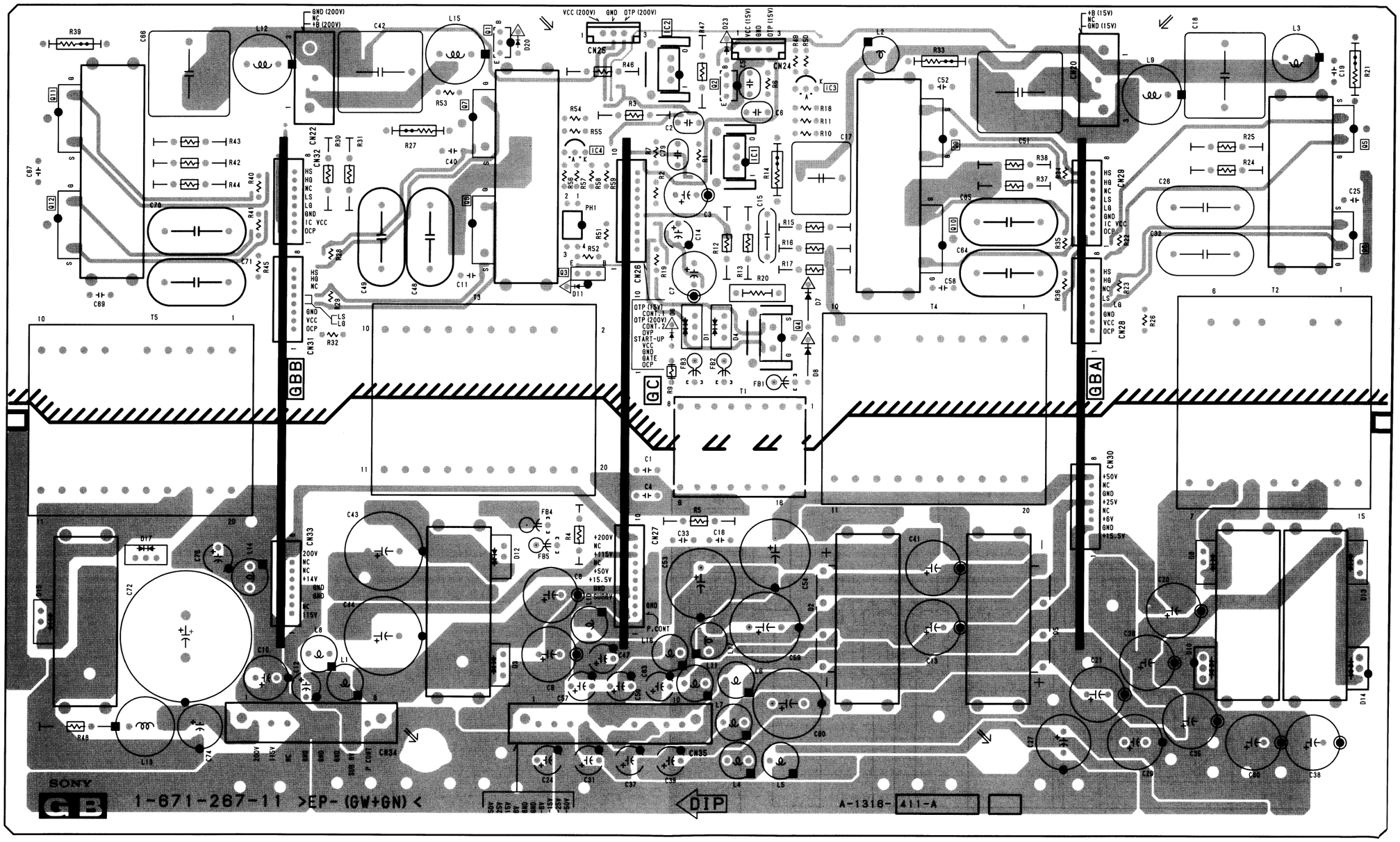

GB -A SIDE-
SUFFIX: -11

GB BOARD

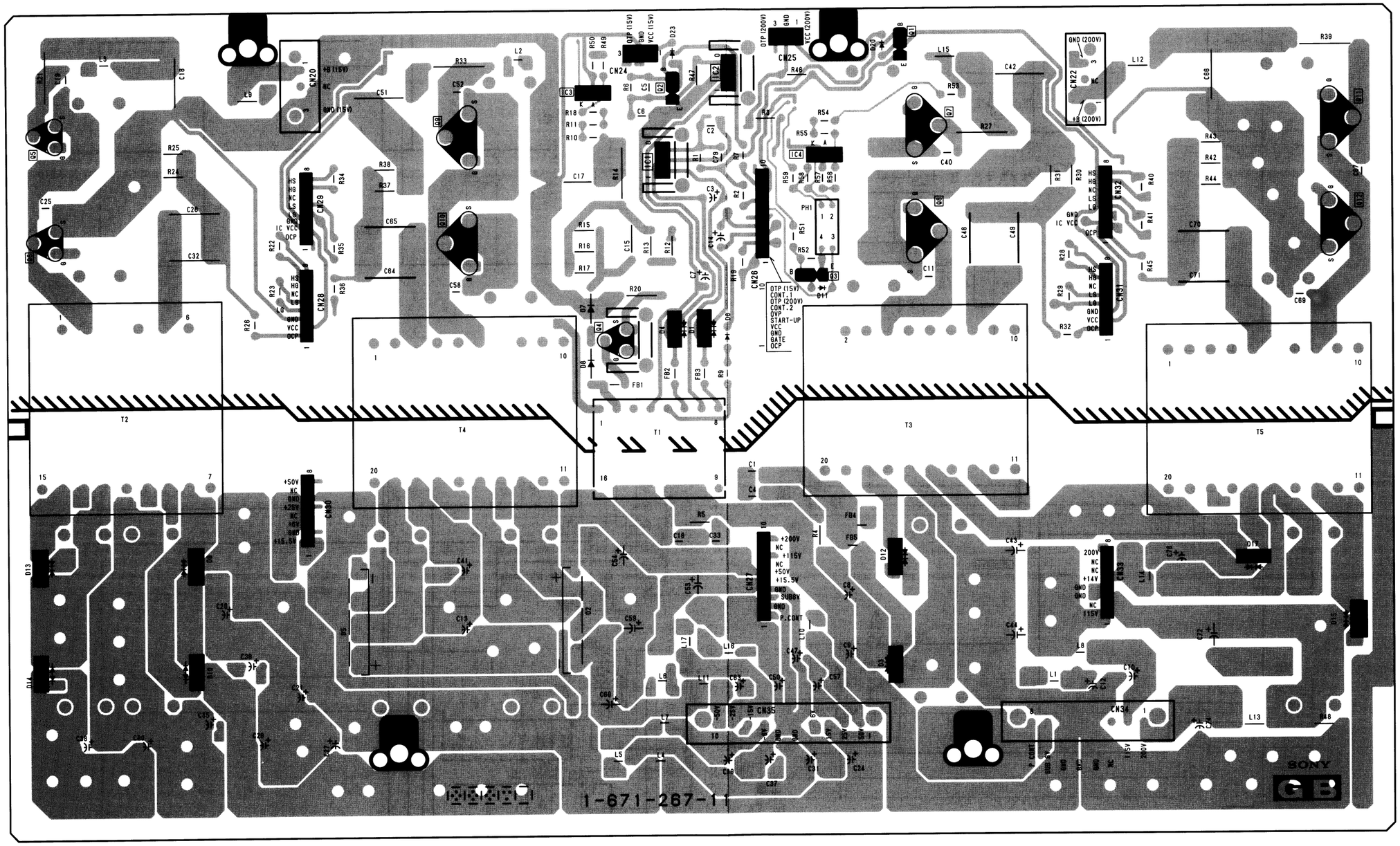

GB -B SIDE-
SUFFIX: -11

10-161

GB (1/2) BOARD

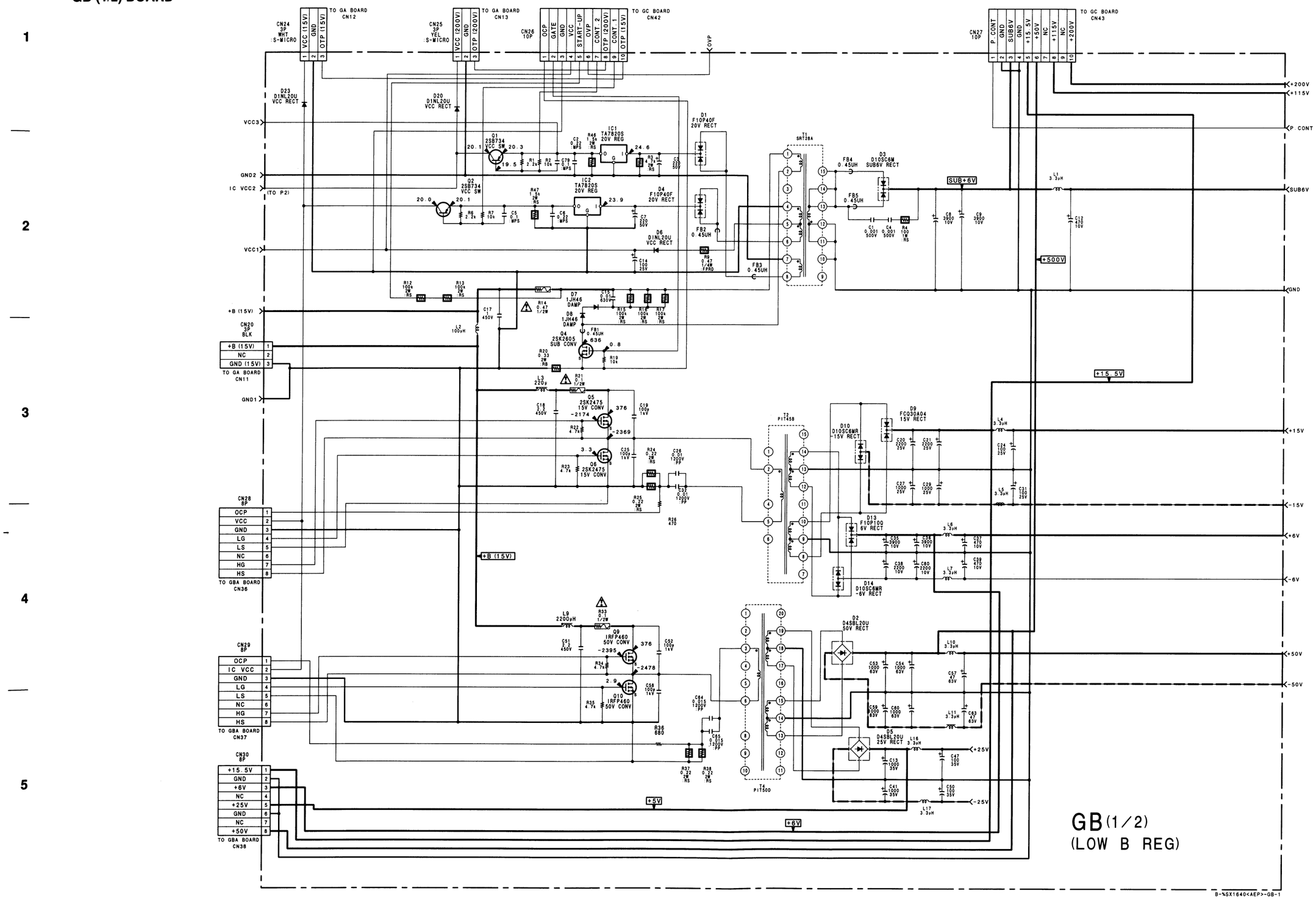
CN24 3P WHT :S-MICRO
VCC (15V)
GND
OTP (15V)
TO GA BOARD CN12
CN25 3P YEL :S-MICRO
VCC (200V)
OTP (200V)
TO GA BOARD CN13
CN26 10P
OCP
GATE
VCC
START-UP
OVP
CONT 2
CONT 1
TO GC BOARD CN42
CN27 10P
P CONT
SUB6V
+15.5V
+50V
+115V
+200V
TO GC BOARD CN43
D23 D1NL20U VCC RECT
D20 D1NL20U VCC RECT
VCC3
GND2
IC VCC2
(TO P2)
VCC1
Q1 2SB734 VCC SW
Q2 2SB734 VCC SW
IC1 TA7820S 20V REG
IC2 TA7820S 20V REG
D1 F10P40F 20V RECT
D4 F10P40F 20V RECT
D6 D1NL20U VCC RECT
T1 SRT28A
FB4 0.45UH
FB5 0.45UH
FB2 0.45UH
FB3 0.45UH
D3 D10SC6M SUB6V RECT
SUB+6V
L1 3.3μH
+500V
GND
+B (15V)
CN20 3P BLK
TO GA BOARD CN11
GND1
L2 100μH
C17 450V
D7 1JH46 DAMP
D8 1JH46 DAMP
Q4 2SK2605 SUB CONV
Q5 2SK2475 15V CONV
Q6 2SK2475 15V CONV
+15.5V
T2 PIT45B
D10 D10SC6MR -15V RECT
D9 FC030A04 15V RECT
D13 F10P10Q 6V RECT
D14 D10SC6MR -6V RECT
+15V
-15V
+6V
-6V
CN28 8P
OCP
VCC
GND
LG
LS
NC
HG
HS
TO GBA BOARD CN36
+B (15V)
L9 2200μH
Q9 IRFP460 50V CONV
Q10 IRFP460 50V CONV
CN29 8P
OCP
IC VCC
GND
LG
LS
NC
HG
HS
TO GBA BOARD CN37
T3 PIT50D
D2 D4SBL20U 50V RECT
+50V
-50V
CN30 8P
+15.5V
GND
+6V
NC
+25V
GND
NC
+50V
TO GBA BOARD CN38
D5 D4SBL20U 25V RECT
+25V
-25V
+5V
+6V
GB(1/2)
(LOW B REG)
B-%SX1640<AEP>-GB-1

 GB (2/2)

GB (2/2) BOARD

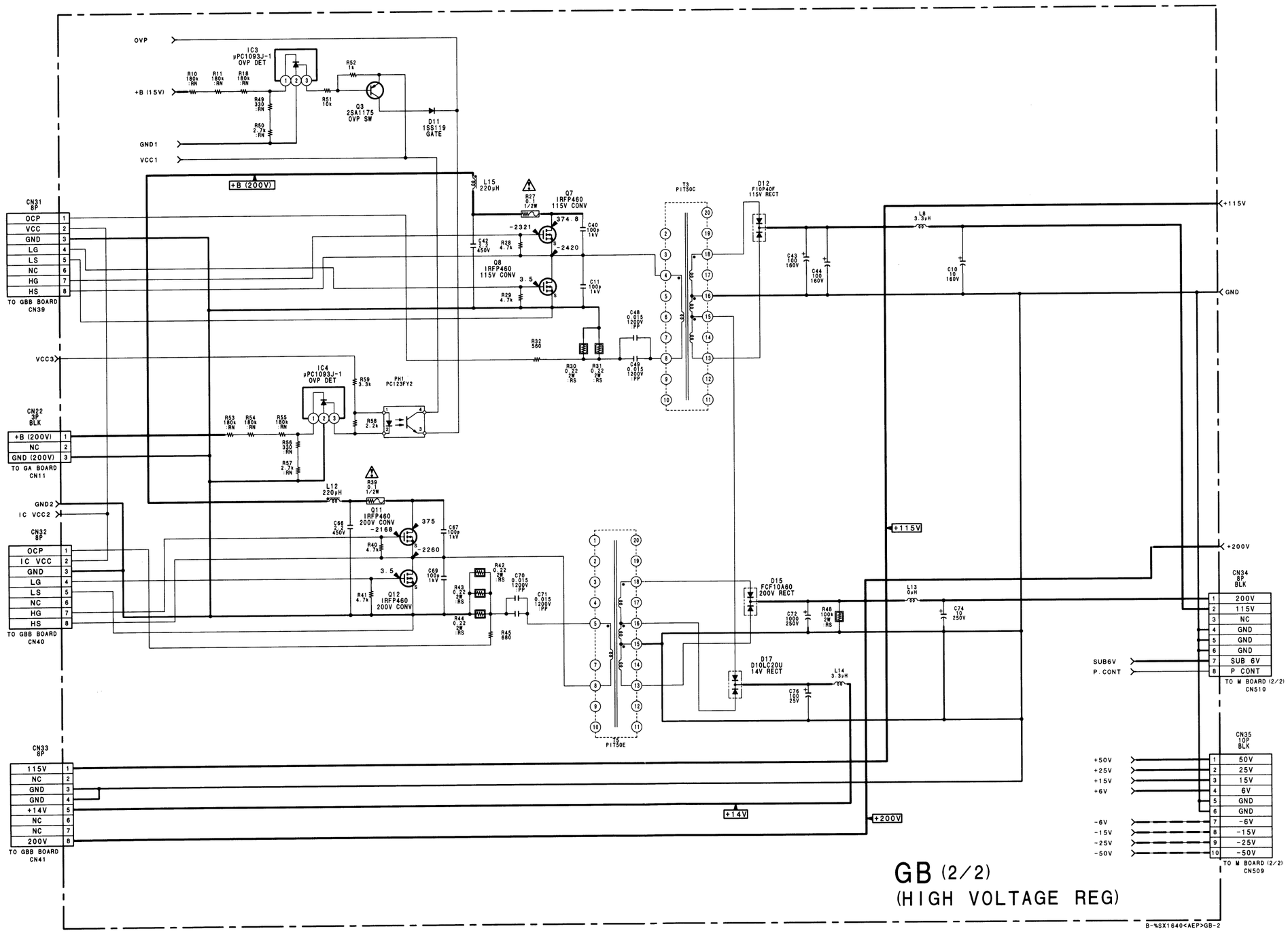

 10-163

GBA BOARD

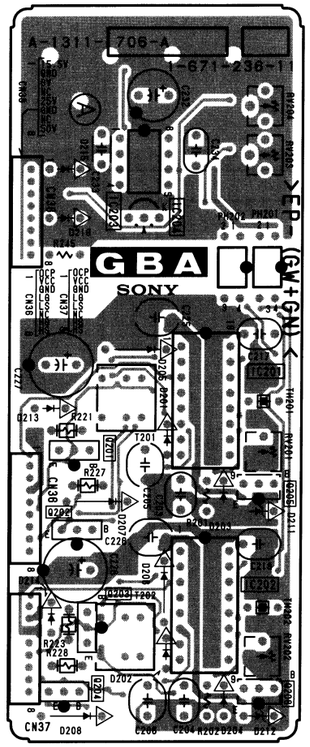

GBA -A SIDE-
SUFFIX: -11

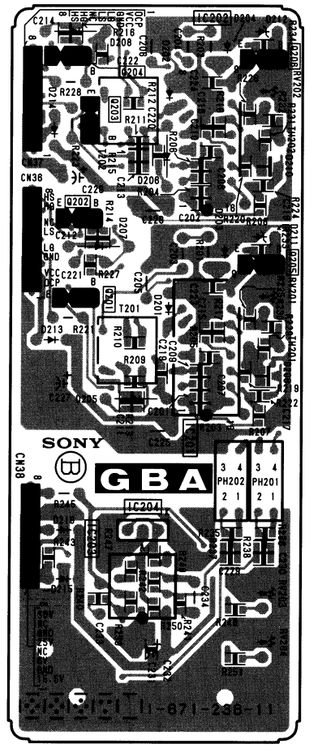

GBA -B SIDE-
SUFFIX: -11

GBA BOARD

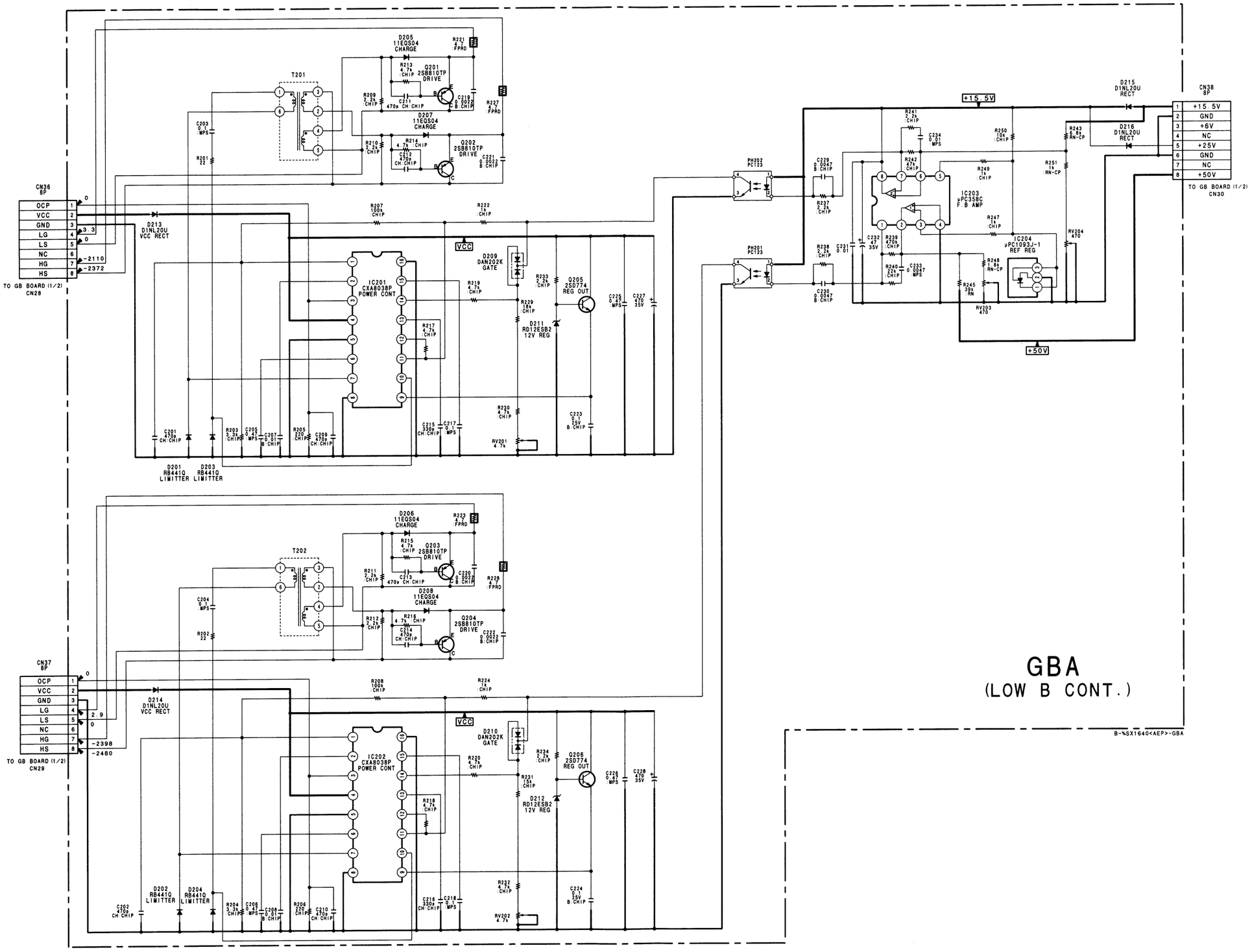
CN36
8P
OCP
VCC
GND
LG
LS
NC
HG
HS
TO GB BOARD (1/2)
CN28
CN37
8P
TO GB BOARD (1/2)
CN29
CN38
6P
+15.5V
GND
+6V
NC
+25V
GND
NC
+50V
TO GB BOARD (1/2)
CN30
T201
T202
IC201
CXA8038P
POWER CONT
IC202
CXA8038P
POWER CONT
IC203
μPC358C
F.B AMP
IC204
μPC1093J-1
REF REG
Q205
2SD774
REG. OUT
Q206
2SD774
REG. OUT
Q201
2SB810TP
DRIVE
Q202
2SB810TP
DRIVE
Q203
2SB810TP
DRIVE
Q204
2SB810TP
DRIVE
D205
11EQS04
CHARGE
D206
11EQS04
CHARGE
D207
11EQS04
CHARGE
D208
11EQS04
CHARGE
D209
DAN202K
GATE
D210
DAN202K
GATE
D211
RD12ESB2
12V REG
D212
RD12ESB2
12V REG
D213
D1NL20U
VCC RECT
D214
D1NL20U
VCC RECT
D215
D1NL20U
RECT
D216
D1NL20U
RECT
D201
RB441Q
LIMITTER
D202
RB441Q
LIMITTER
D203
RB441Q
LIMITTER
D204
RB441Q
LIMITTER
PH201
PC123
PH202
PC123
VCC
GBA
(LOW B CONT.)
B-%SX1640<AEP>-GBA

GBB BOARD

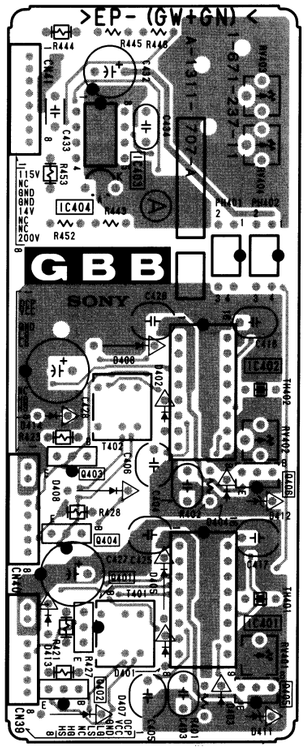

GBB -A SIDE-
SUFFIX: -11

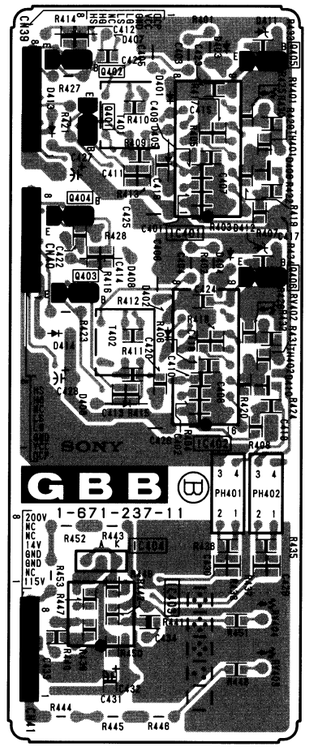

GBB -B SIDE-
SUFFIX: -11

GBB BOARD

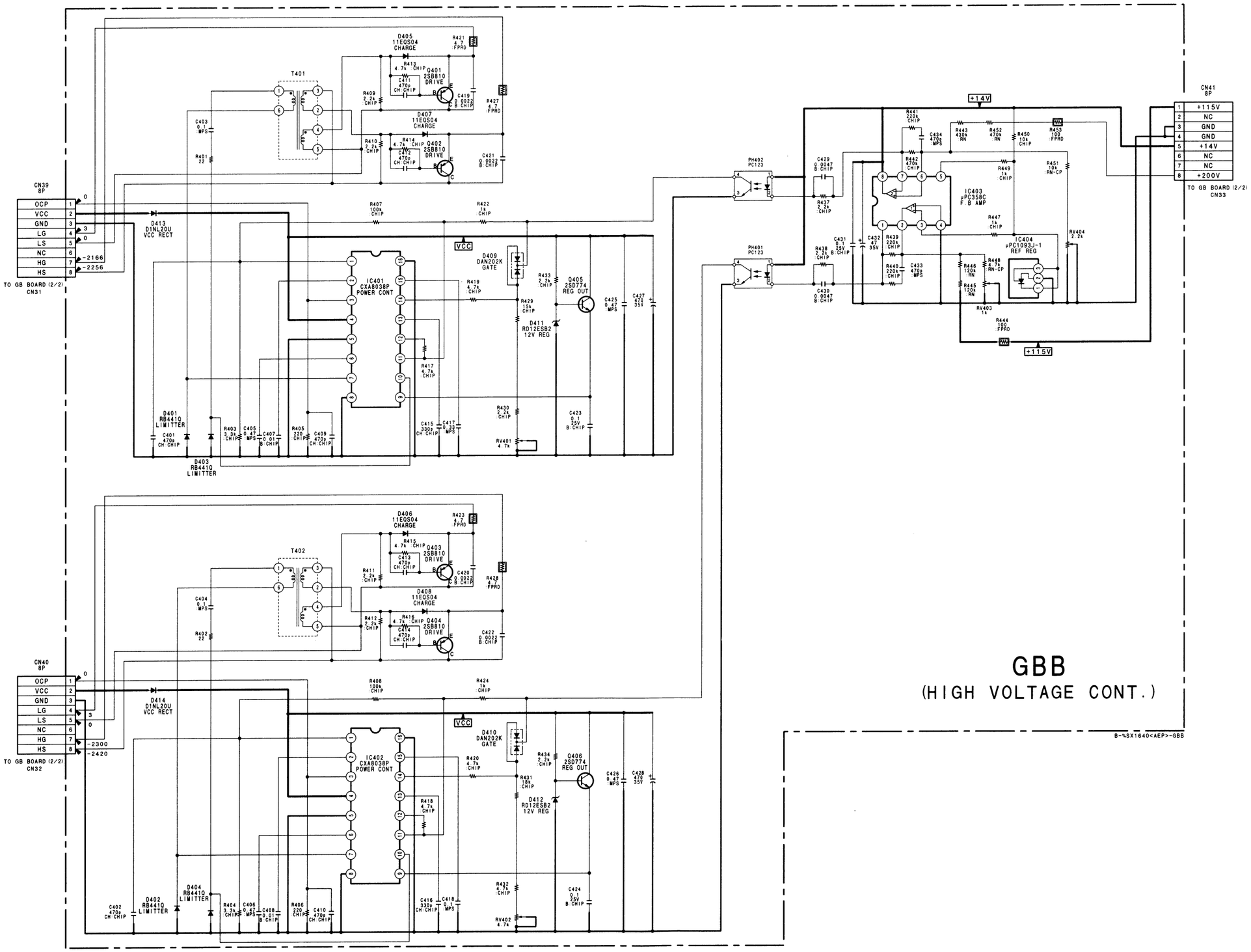

GBB
(HIGH VOLTAGE CONT.)

B-%SX1640<AEP>-GBB

GC BOARD

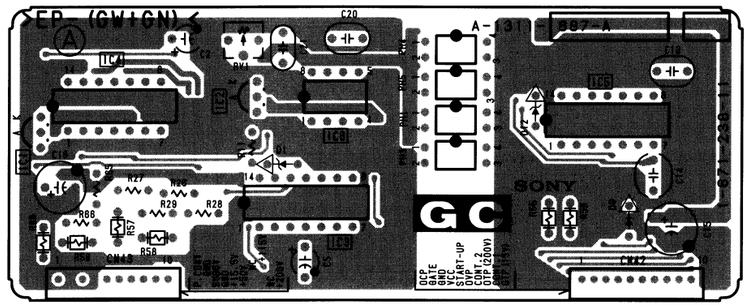

GC -A SIDE-
SUFFIX: -11

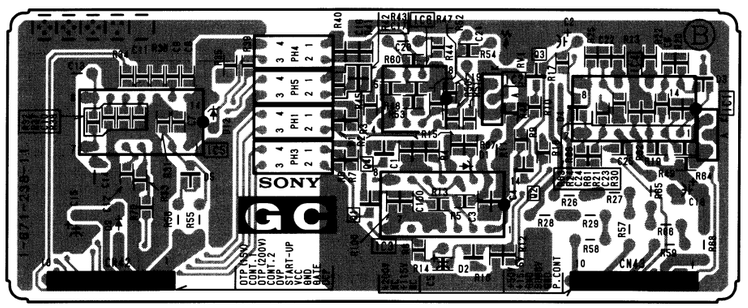

GC -B SIDE-
SUFFIX: -11

GC BOARD

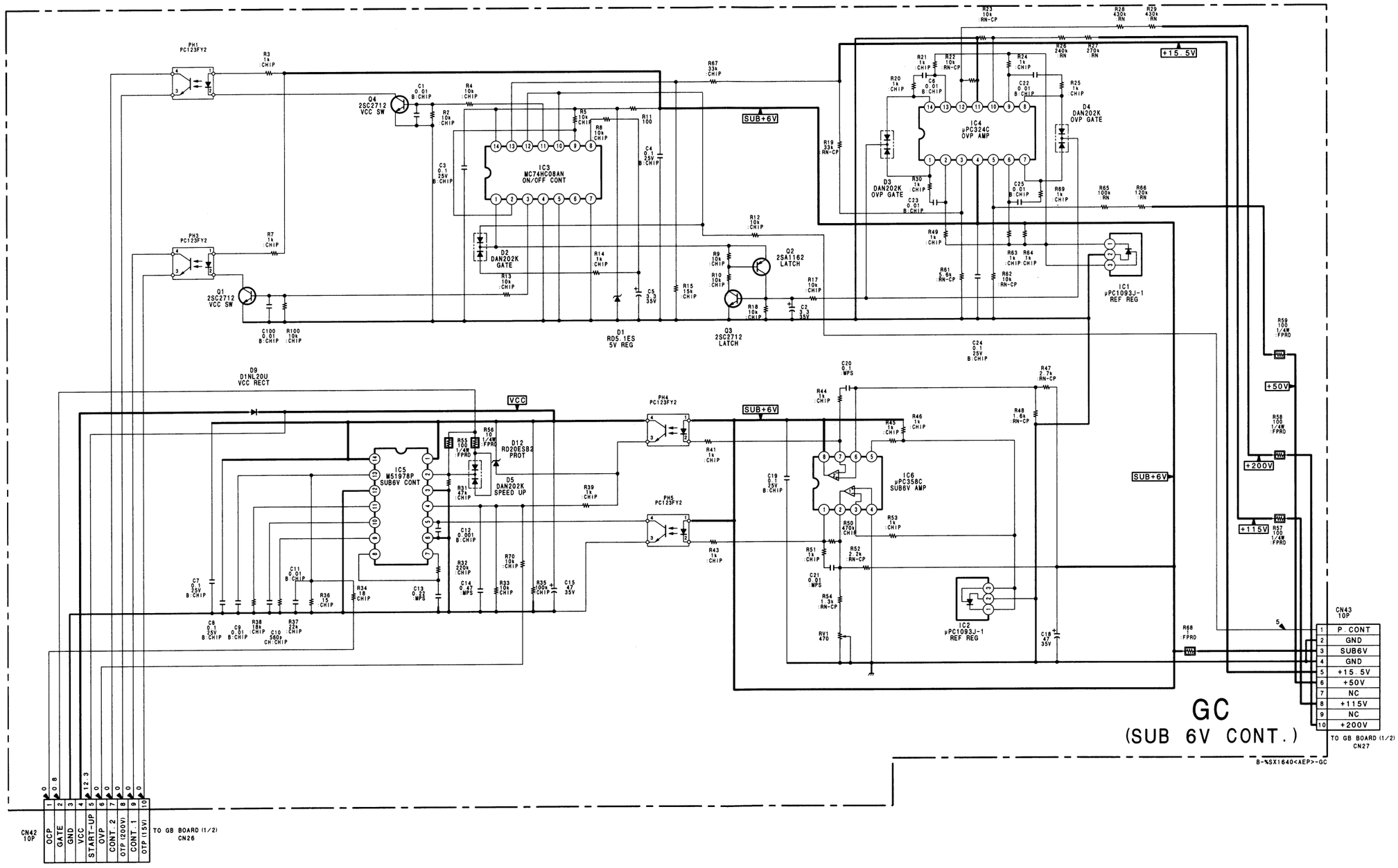
GC
(SUB 6V CONT.)
IC3 MC74HC08AN ON/OFF CONT
IC4 μPC324C OVP AMP
IC5 M51978P SUB6V CONT
IC6 μPC358C SUB6V AMP
IC1 μPC1093J-1 REF REG
IC2 μPC1093J-1 REF REG
Q1 2SC2712 VCC SW
Q4 2SC2712 VCC SW
Q2 2SA1162 LATCH
Q3 2SC2712 LATCH
D1 RD5.1ES 5V REG
D2 DAN202K GATE
D3 DAN202K OVP GATE
D4 DAN202K OVP GATE
D5 DAN202K SPEED UP
D9 D1NL20U VCC RECT
D12 RD20ESB2 PROT
PH1 PC123FY2
PH3 PC123FY2
PH4 PC123FY2
PH5 PC123FY2
SUB+6V
VCC
+15.5V
+50V
+200V
+115V
CN43 10P
P.CONT
GND
SUB6V
GND
+15.5V
+50V
NC
+115V
NC
+200V
TO GB BOARD (1/2) CN27
CN42 10P
OCP
GATE
GND
VCC
START-UP
OVP
CONT.2
OTP(200V)
CONT.1
OTP(15V)
TO GB BOARD (1/2) CN26
B-%SX1640<AEP>-GC

M BOARD

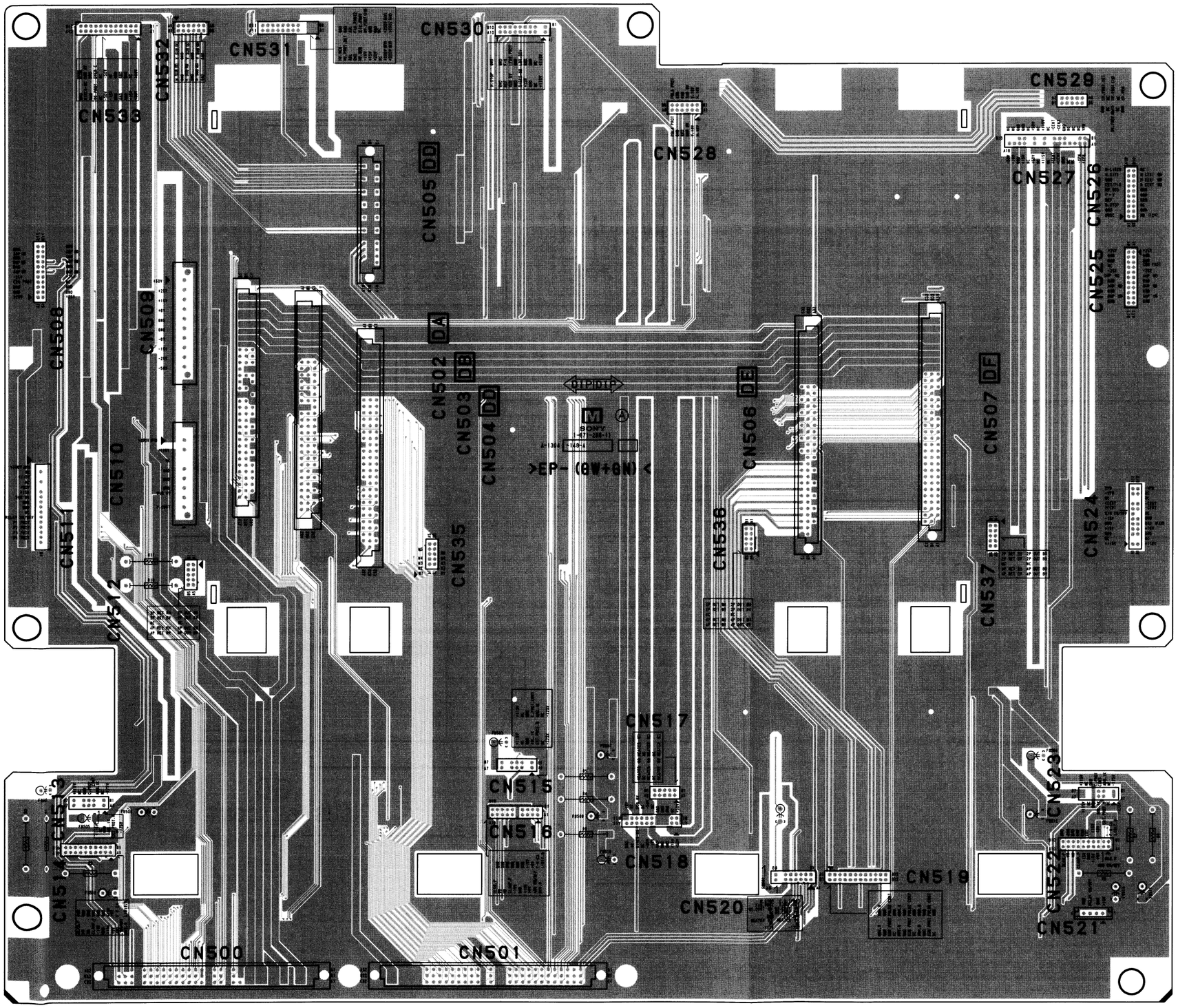

M -A SIDE-
SUFFIX: -11

M BOARD

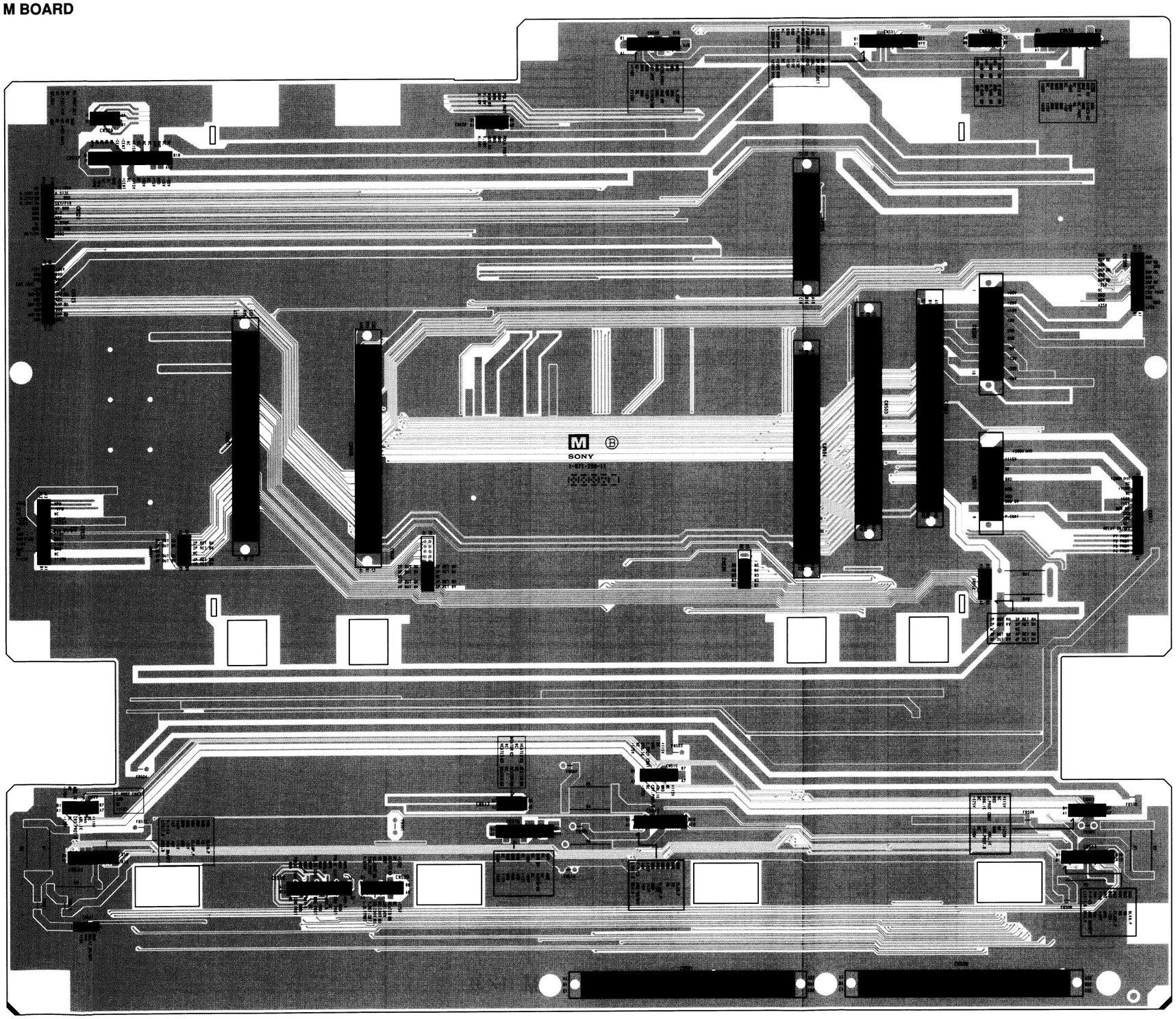

M -B SIDE-
SUFFIX: -11

M (1/3) BOARD

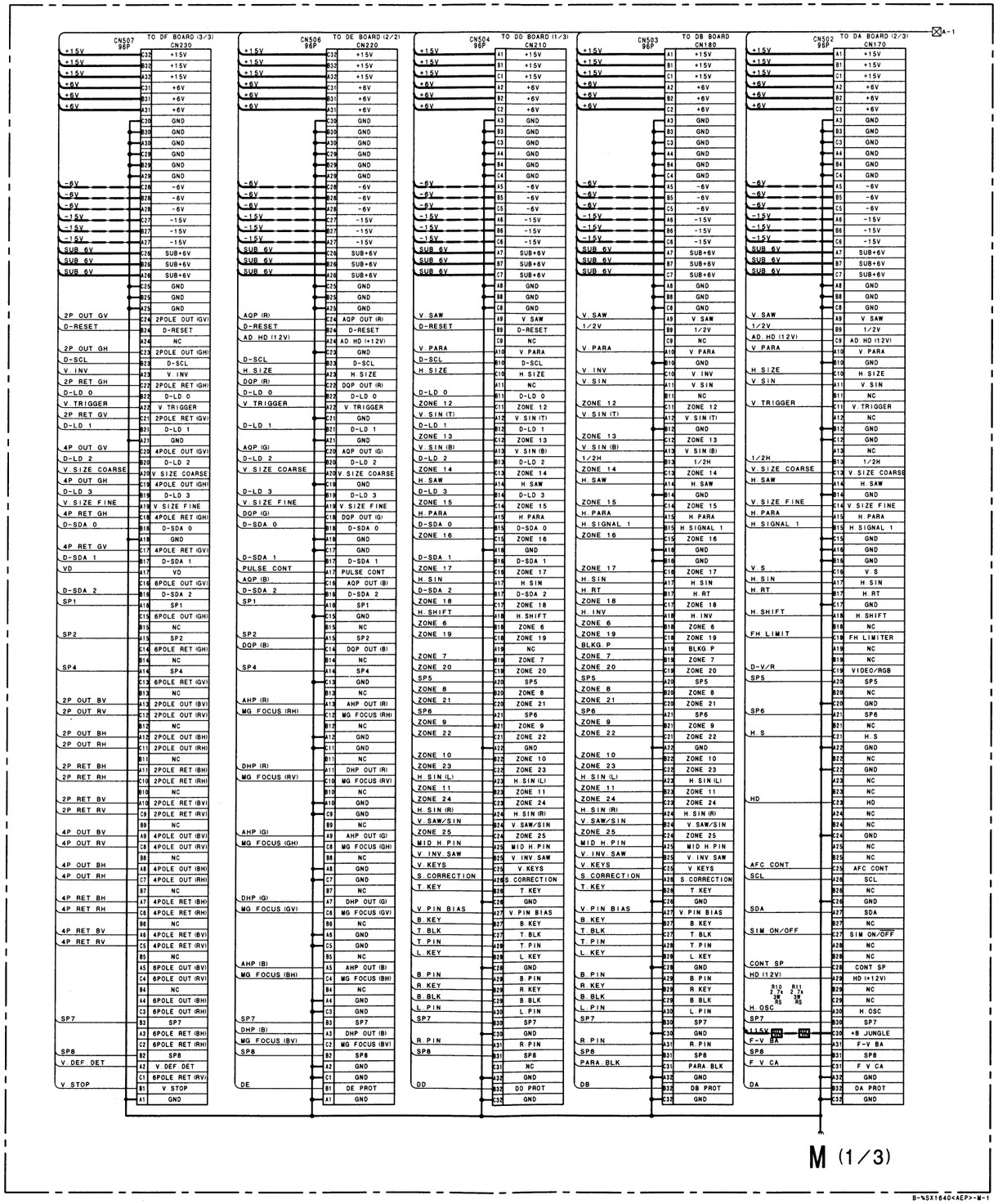

B-%SX1640<AEP>-M-1

M (2/3) BOARD

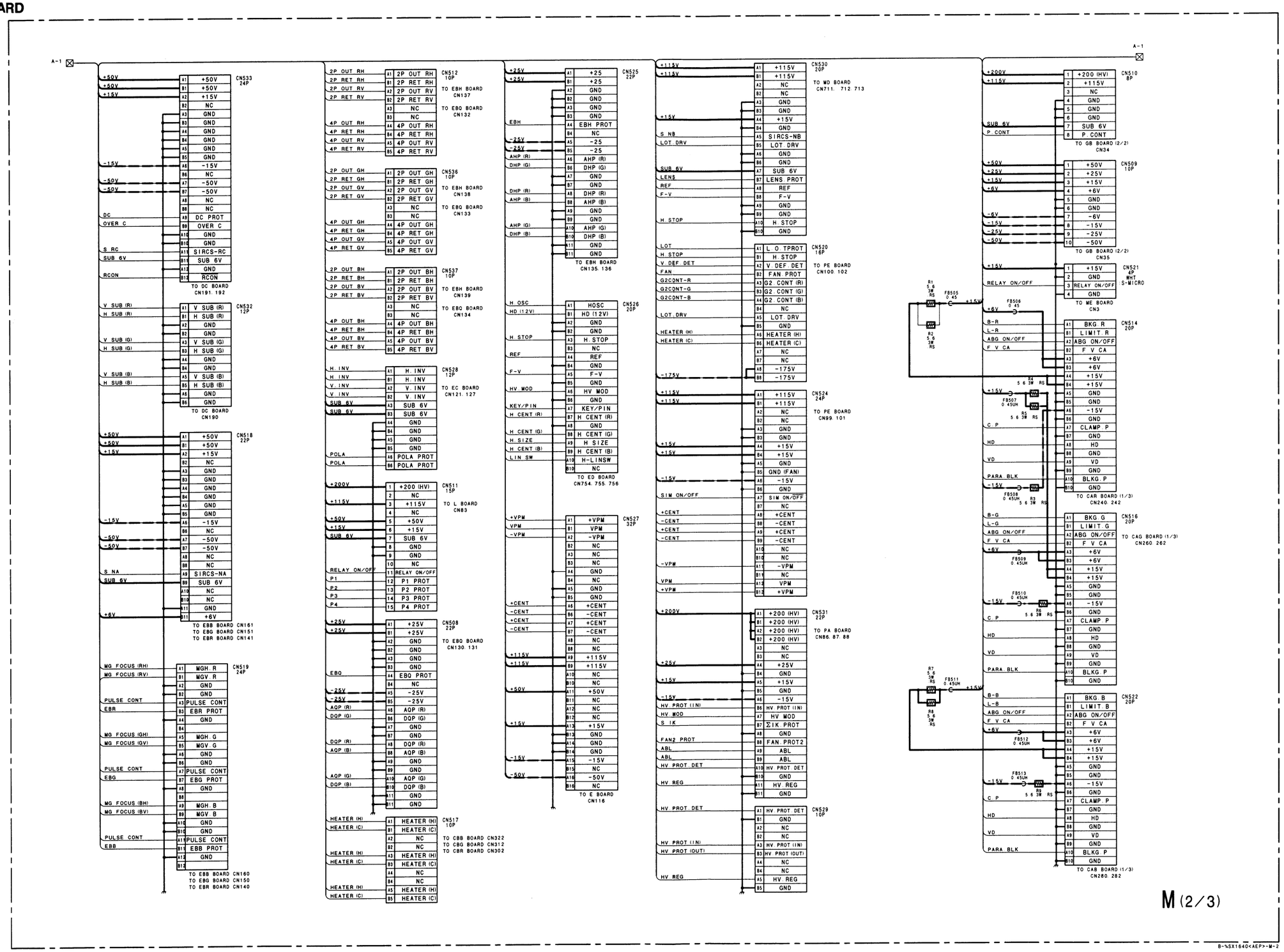
CN533 24P
TO DC BOARD CN191. 192
CN532 12P
TO DC BOARD CN190
CN518 22P
TO EBB BOARD CN161
TO EBG BOARD CN151
TO EBR BOARD CN141
CN519 24P
TO EBB BOARD CN160
TO EBG BOARD CN150
TO EBR BOARD CN140
CN512 10P
TO EBH BOARD CN137
TO EBQ BOARD CN132
CN536 10P
TO EBH BOARD CN138
TO EBQ BOARD CN133
CN537 10P
TO EBH BOARD CN139
TO EBQ BOARD CN134
CN528 12P
TO EC BOARD CN121. 127
CN511 15P
TO L BOARD CN83
CN508 22P
TO EBQ BOARD CN130. 131
CN517 10P
TO CBB BOARD CN322
TO CBG BOARD CN312
TO CBR BOARD CN302
CN525 22P
TO EBH BOARD CN135. 136
CN526 20P
TO ED BOARD CN754. 755. 756
CN527 32P
TO E BOARD CN116
CN530 20P
TO MD BOARD CN711. 712. 713
CN520 16P
TO PE BOARD CN100. 102
CN524 24P
TO PE BOARD CN99. 101
CN531 22P
TO PA BOARD CN86. 87. 88
CN529 10P
CN510 8P
TO GB BOARD (2/2) CN34
CN509 10P
TO GB BOARD (2/2) CN35
CN521 4P WHT S-MICRO
TO ME BOARD CN3
CN514 20P
TO CAR BOARD (1/3) CN240. 242
CN516 20P
TO CAG BOARD (1/3) CN260. 262
CN522 20P
TO CAB BOARD (1/3) CN280. 282
M (2/3)

M (3/3) BOARD

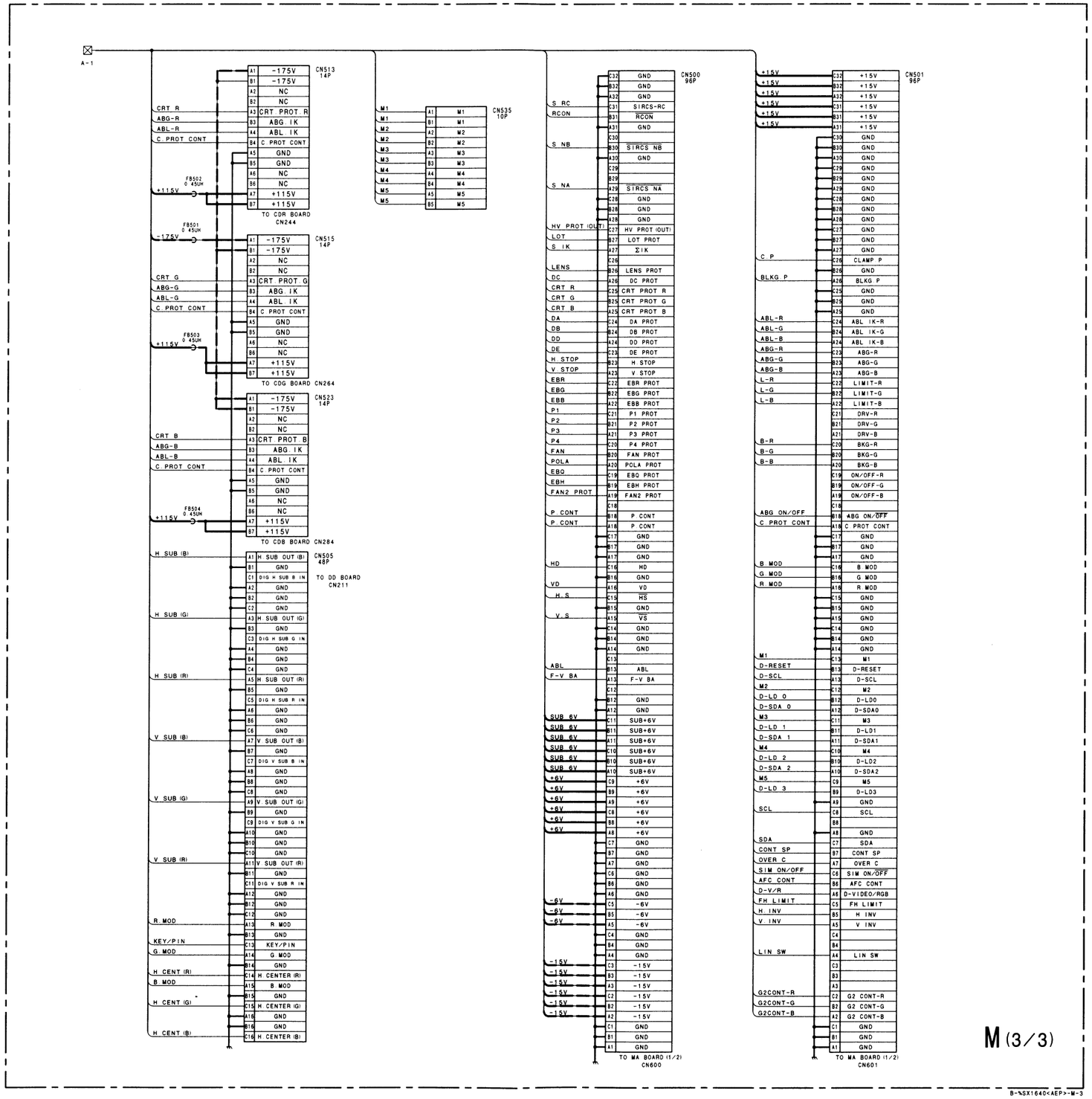
A-1
CN513 14P
TO CDR BOARD CN244
CN515 14P
TO CDG BOARD CN264
CN523 14P
TO CDB BOARD CN284
CN505 48P
TO DD BOARD CN211
CN535 10P
CN500 96P
TO MA BOARD (1/2) CN600
CN501 96P
TO MA BOARD (1/2) CN601
FB502 0.45UH
FB501 0.45UH
FB503 0.45UH
FB504 0.45UH
M (3/3)
B-9SX1640<AEP>-M-3

MA BOARD

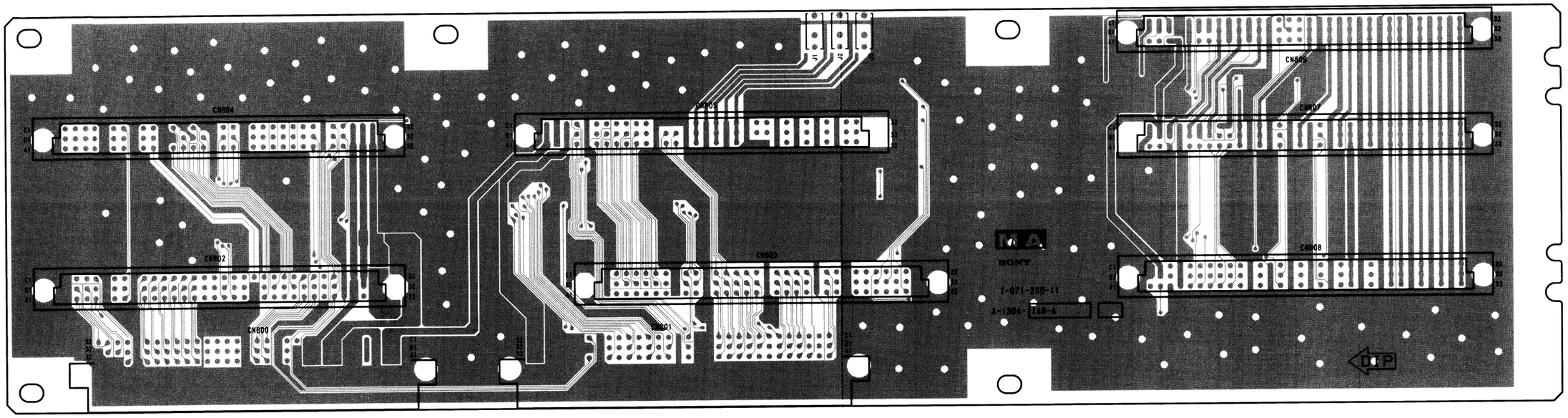

MA -A SIDE-
SUFFIX: -11

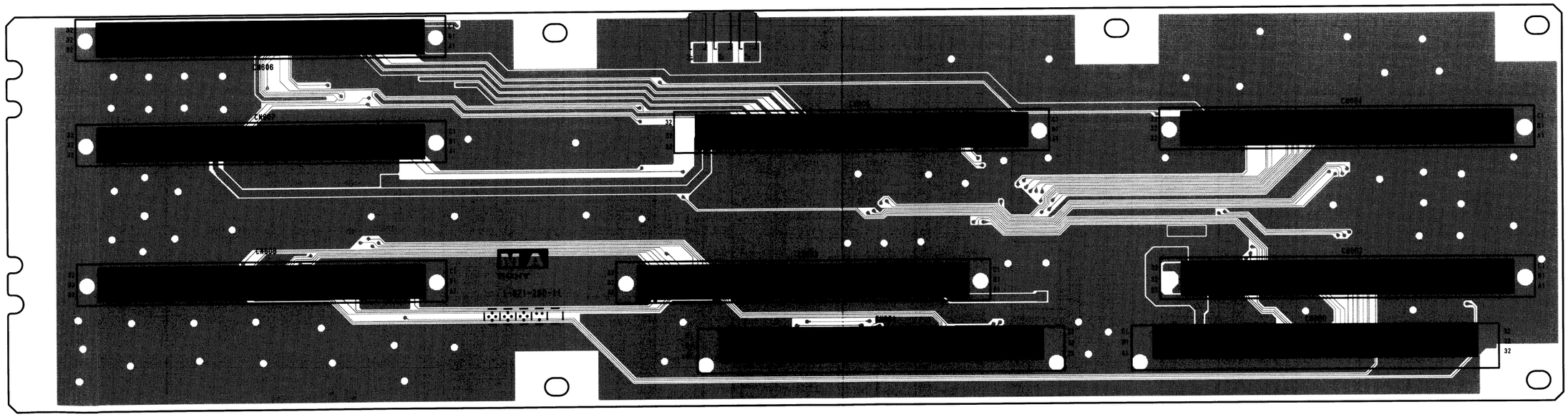

MA -B SIDE-
SUFFIX: -11

M (1/2) BOARD

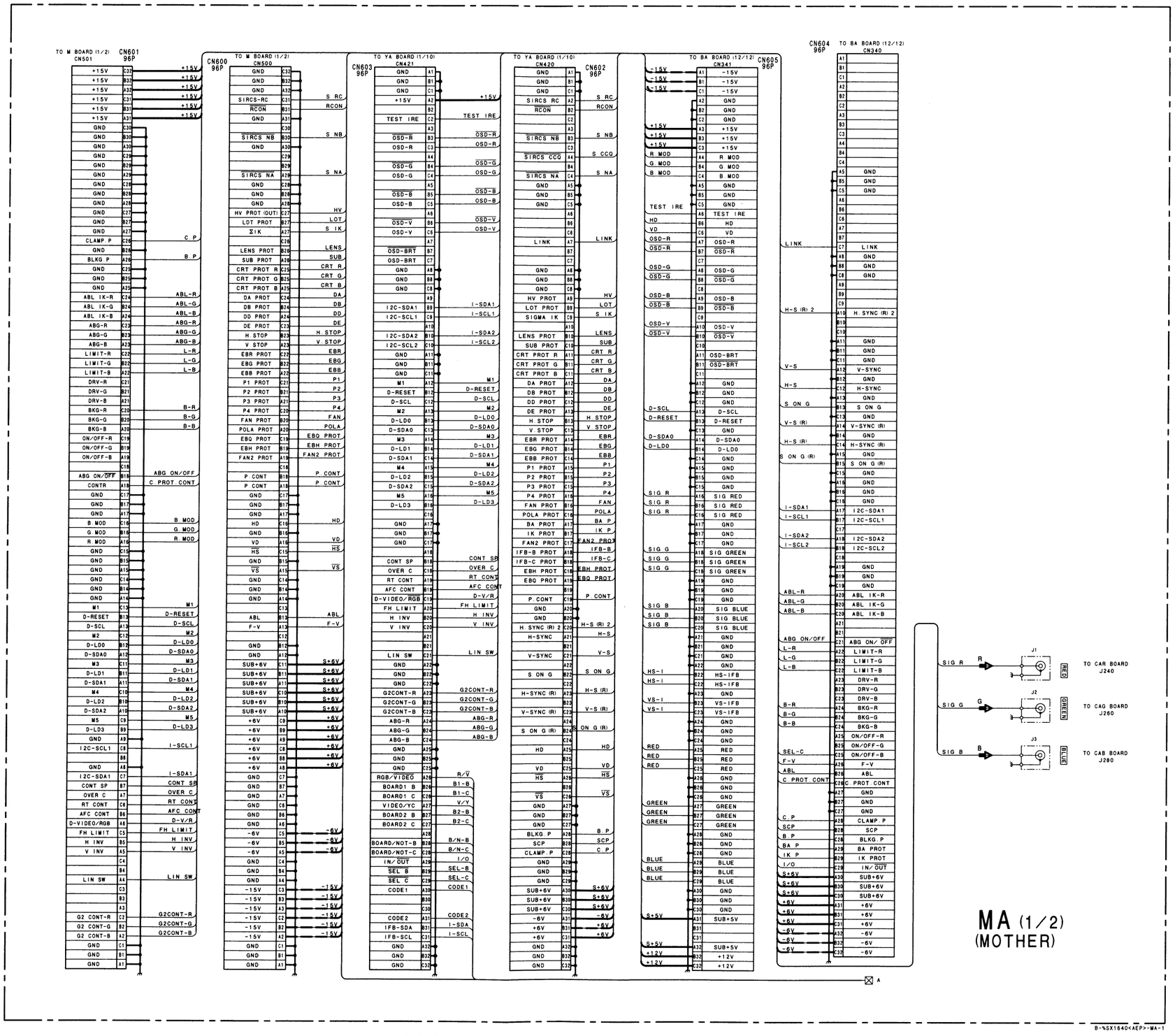
TO M BOARD (1/2) CN501
CN601 96P
CN600 96P
TO M BOARD (1/2) CN500
CN603 96P
TO YA BOARD (1/10) CN421
CN602 96P
TO YA BOARD (1/10) CN420
CN605 96P
TO BA BOARD (12/12) CN341
CN604 96P
TO BA BOARD (12/12) CN340
TO CAR BOARD J240
TO CAG BOARD J260
TO CAB BOARD J280
MA (1/2) (MOTHER)
8-%SX1640<AEP>-MA-1

MA (2/2) BOARD

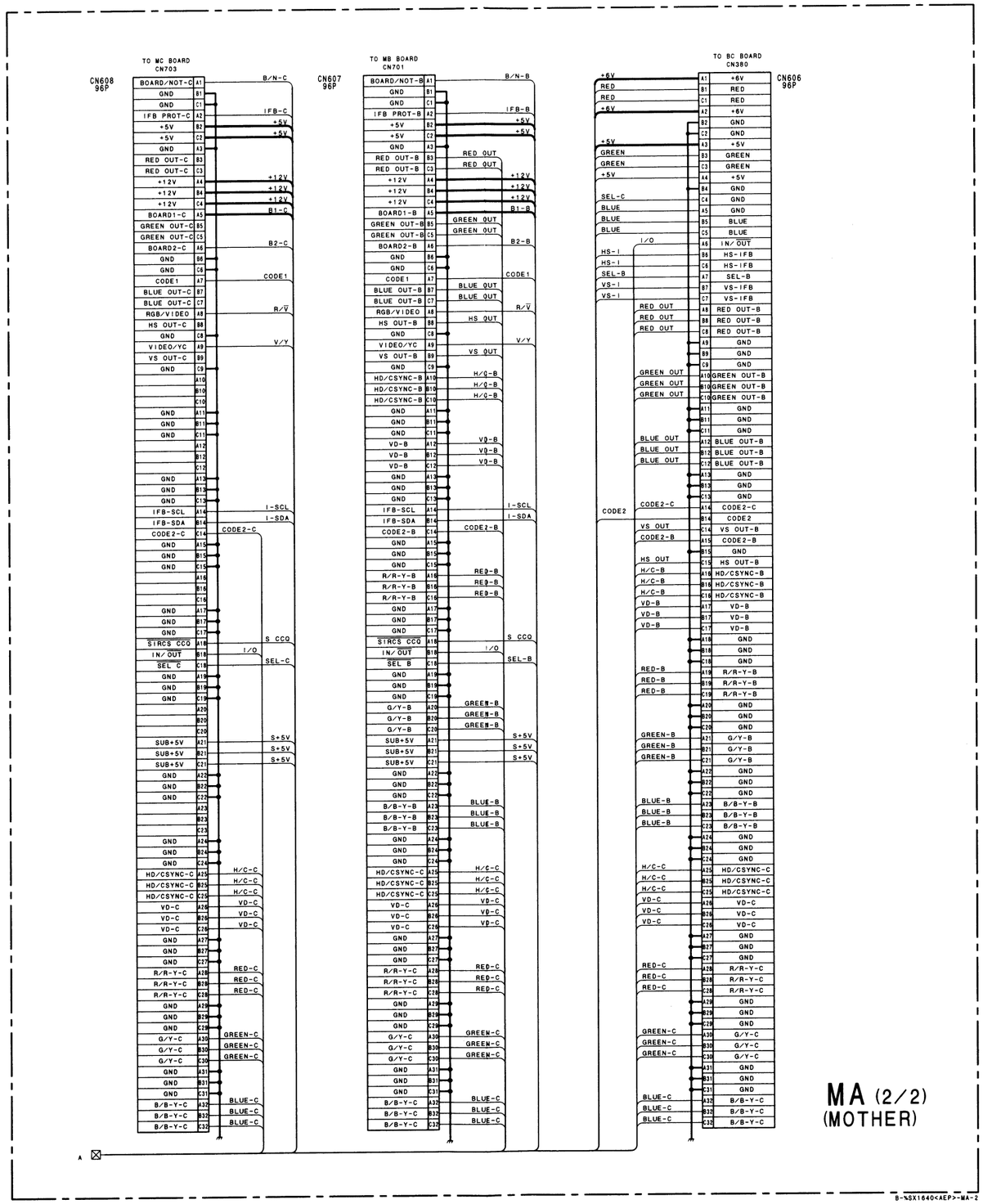
TO MC BOARD
CN703
CN608
96P
TO MB BOARD
CN701
CN607
96P
TO BC BOARD
CN380
CN606
96P
MA (2/2)
(MOTHER)
8-%SX1640<AEP>-MA-2

MB BOARD

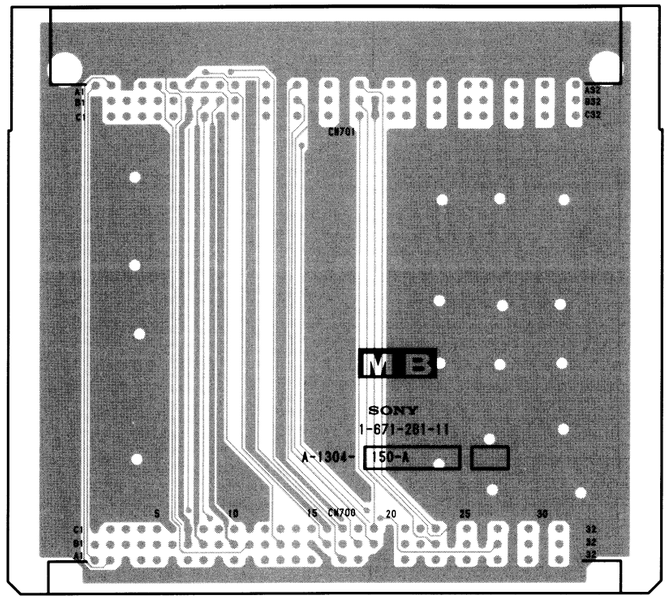

MB -A SIDE-
SUFFIX: -11

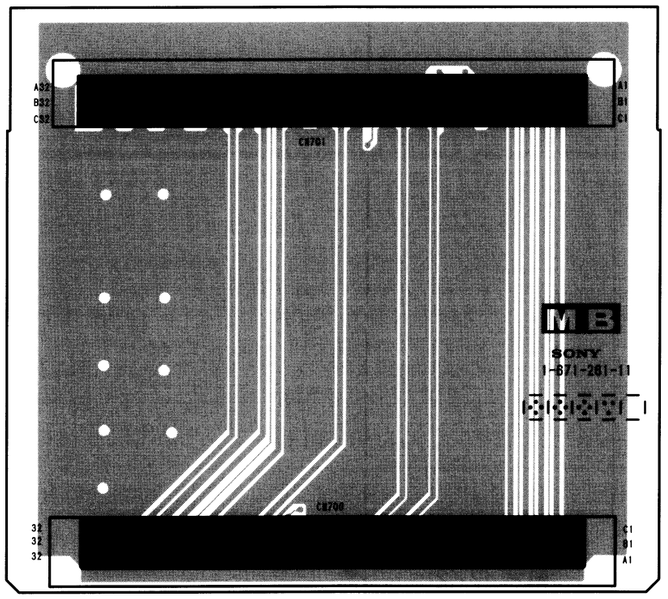

MB -B SIDE-
SUFFIX: -11

MB BOARD

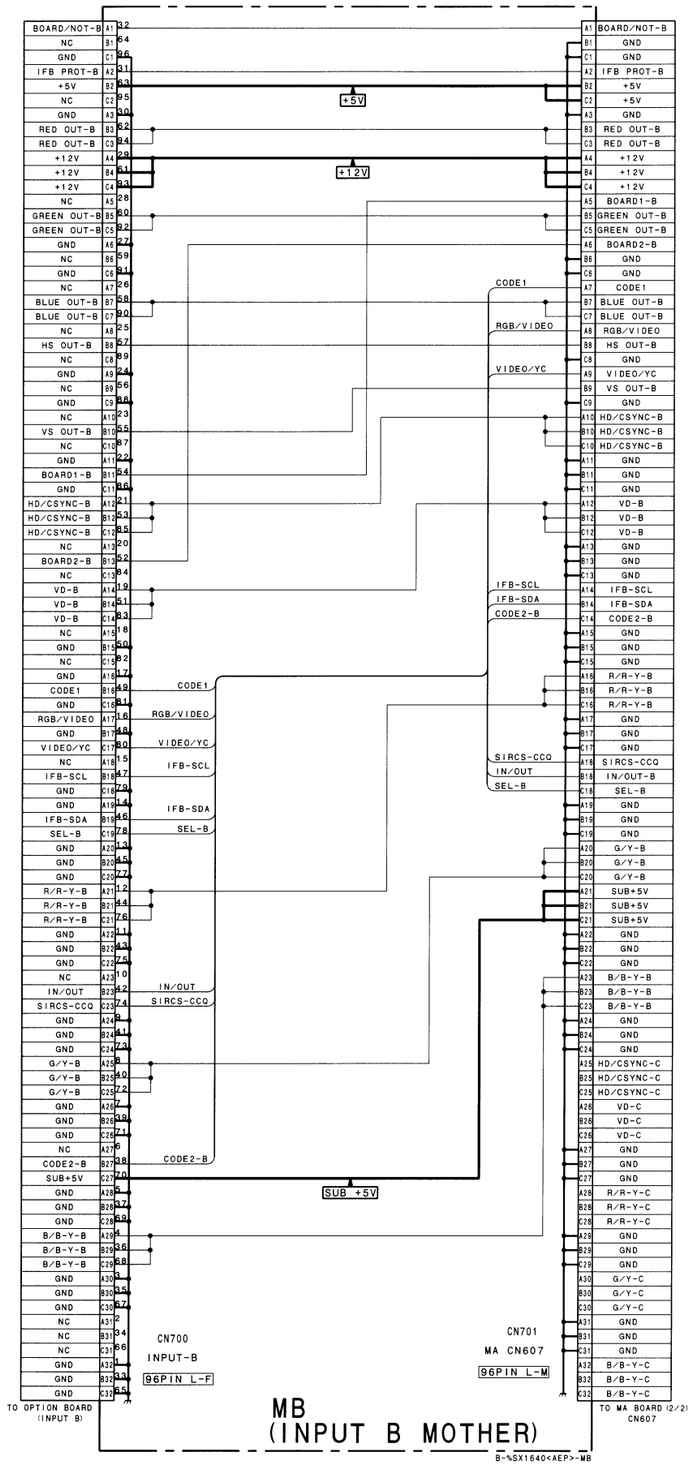

MC BOARD

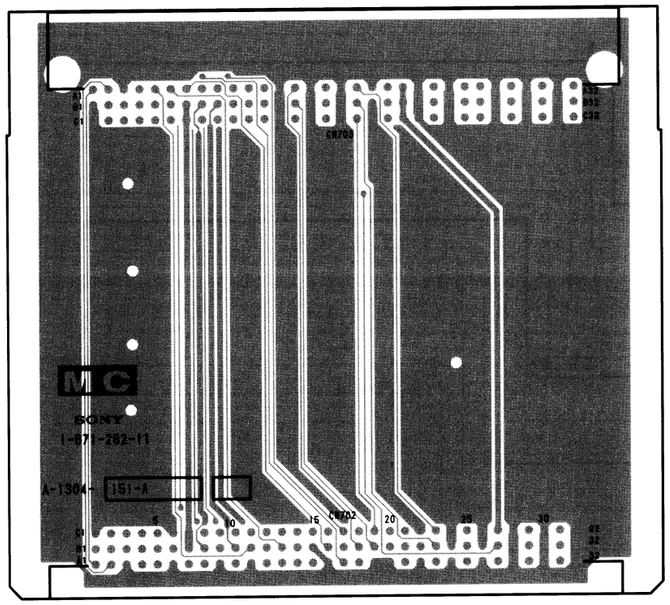

MC -A SIDE-
SUFFIX: -11

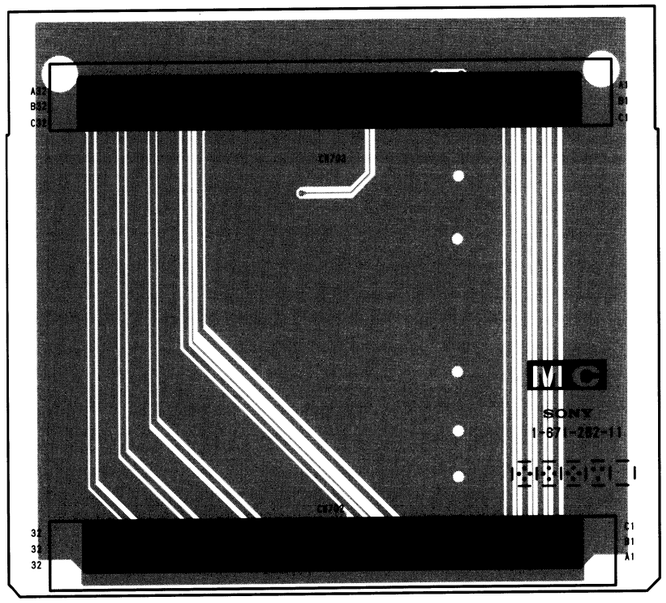

MC -B SIDE-
SUFFIX: -11

MC BOARD

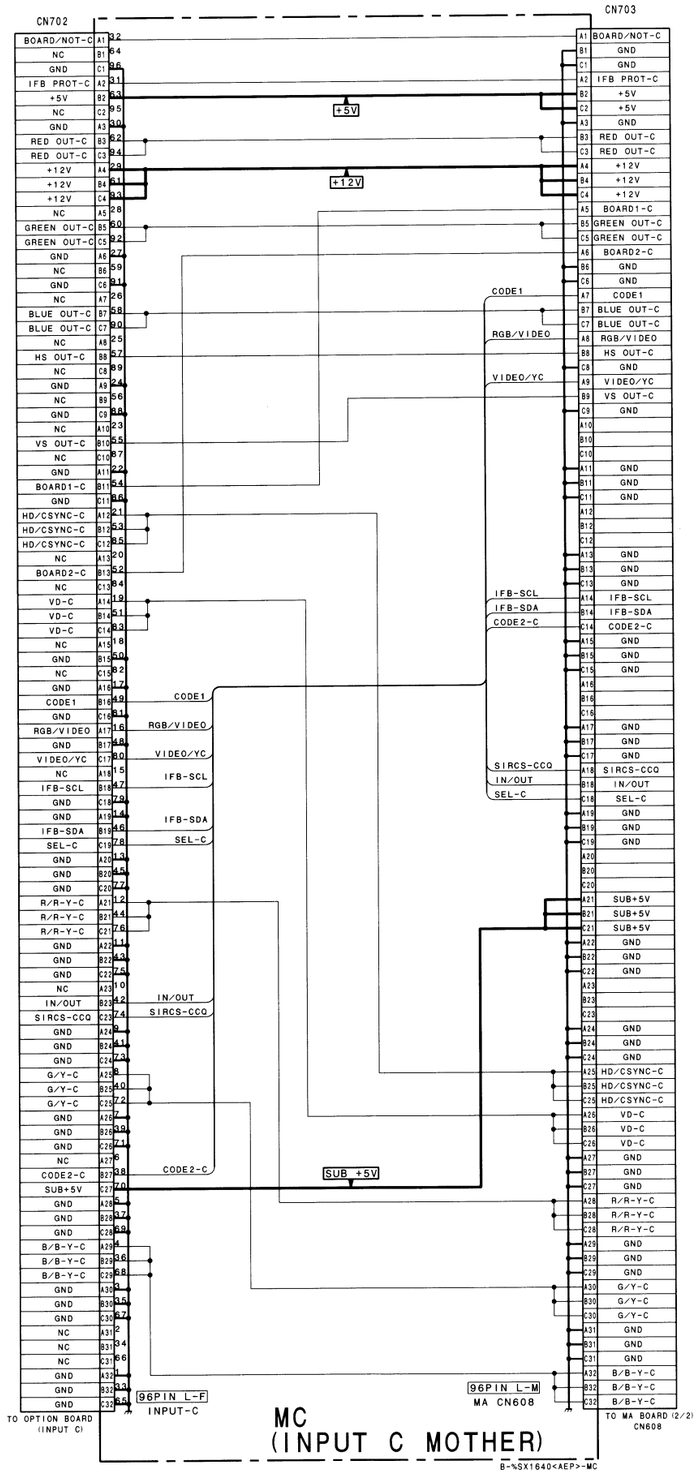

MD BOARD

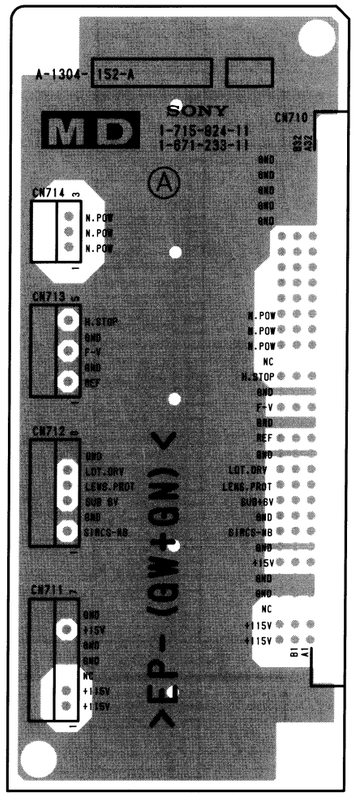

MD -A SIDE-
SUFFIX: -11

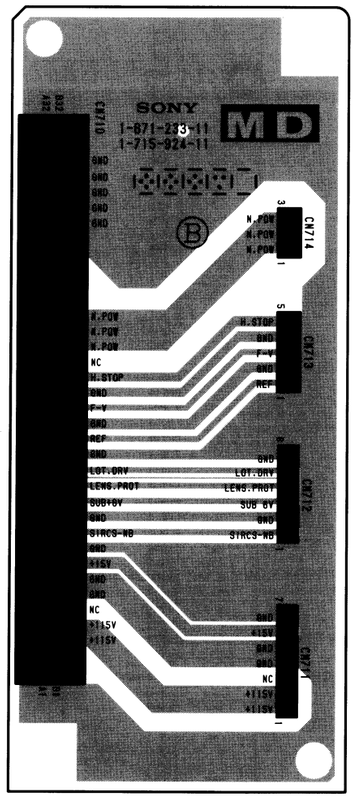

MD -B SIDE-
SUFFIX: -11

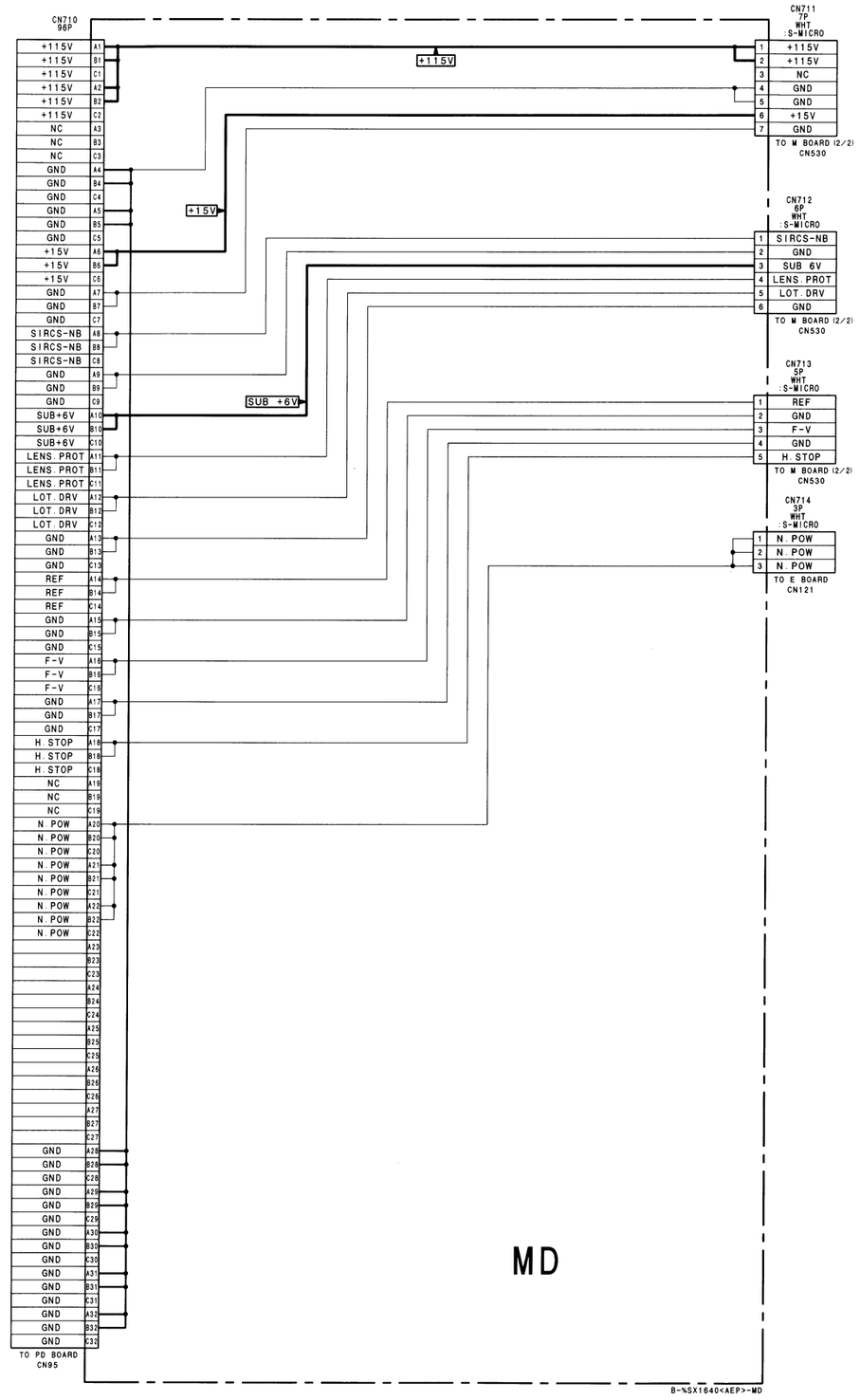

EC BOARD

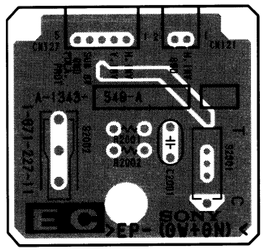

EC -A SIDE-
SUFFIX: -11

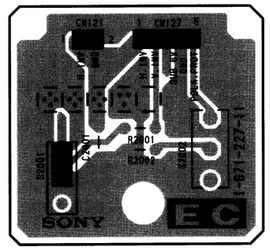

EC -B SIDE-
SUFFIX: -11

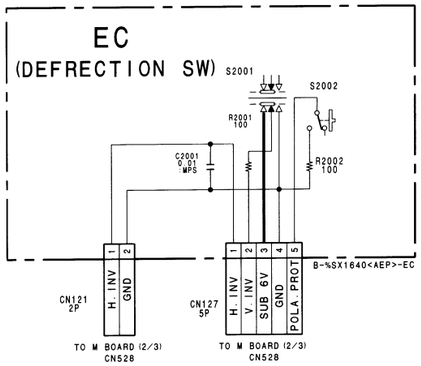

ME BOARD

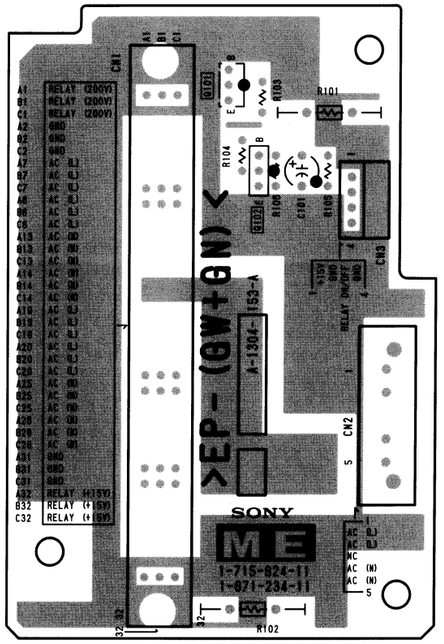

ME -A SIDE-
SUFFIX: -11

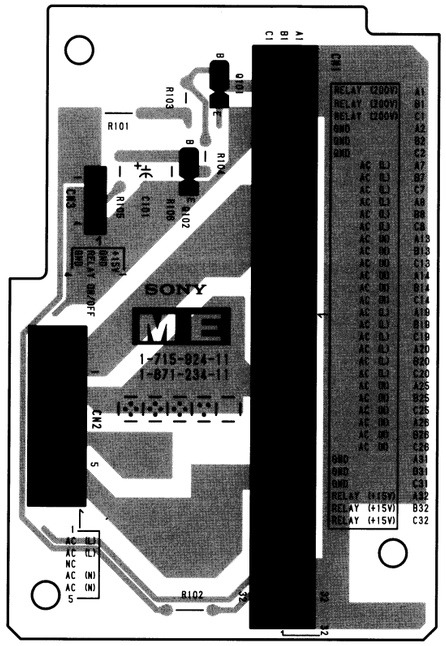
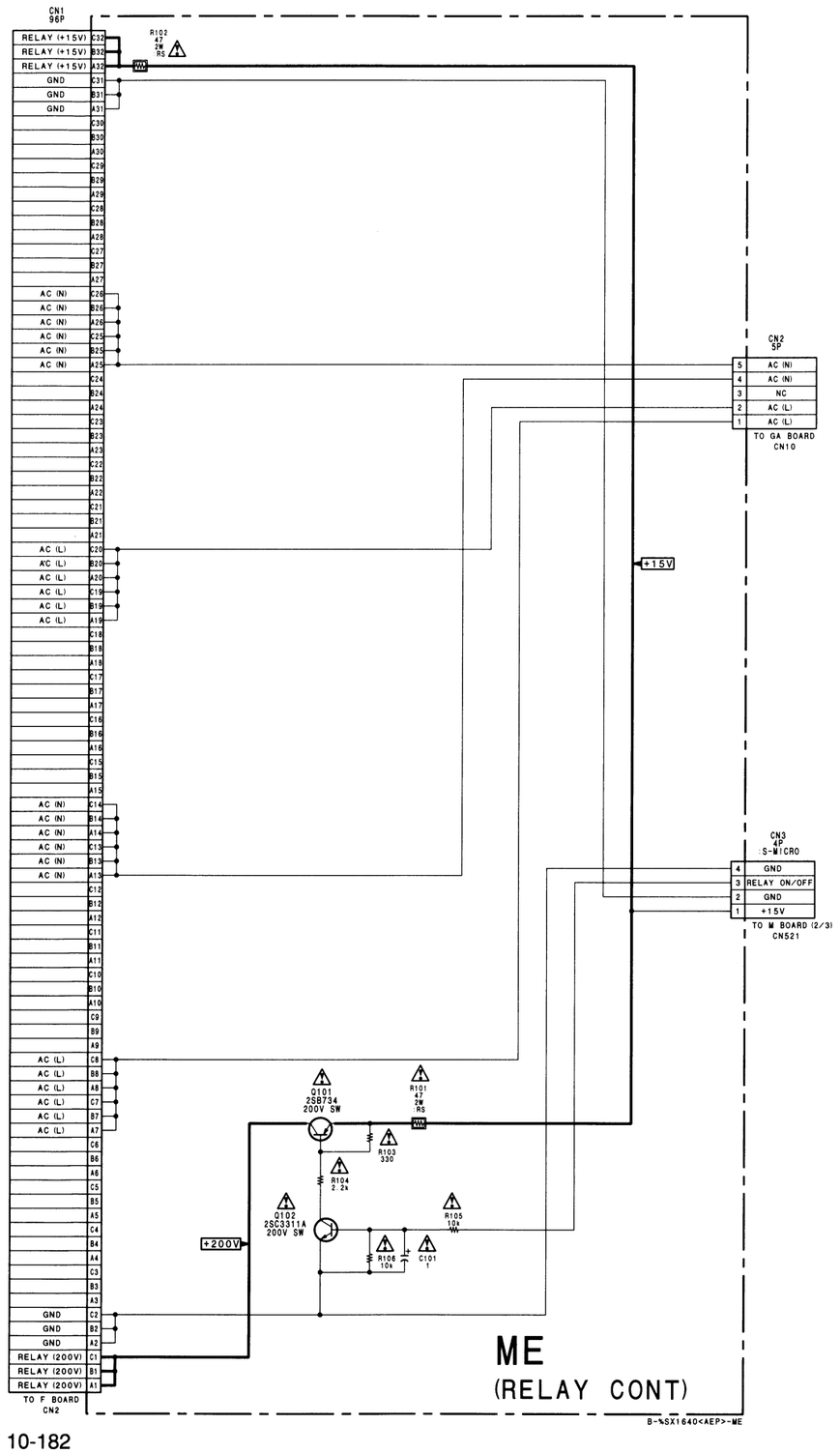
ME -B SIDE-
SUFFIX: -11